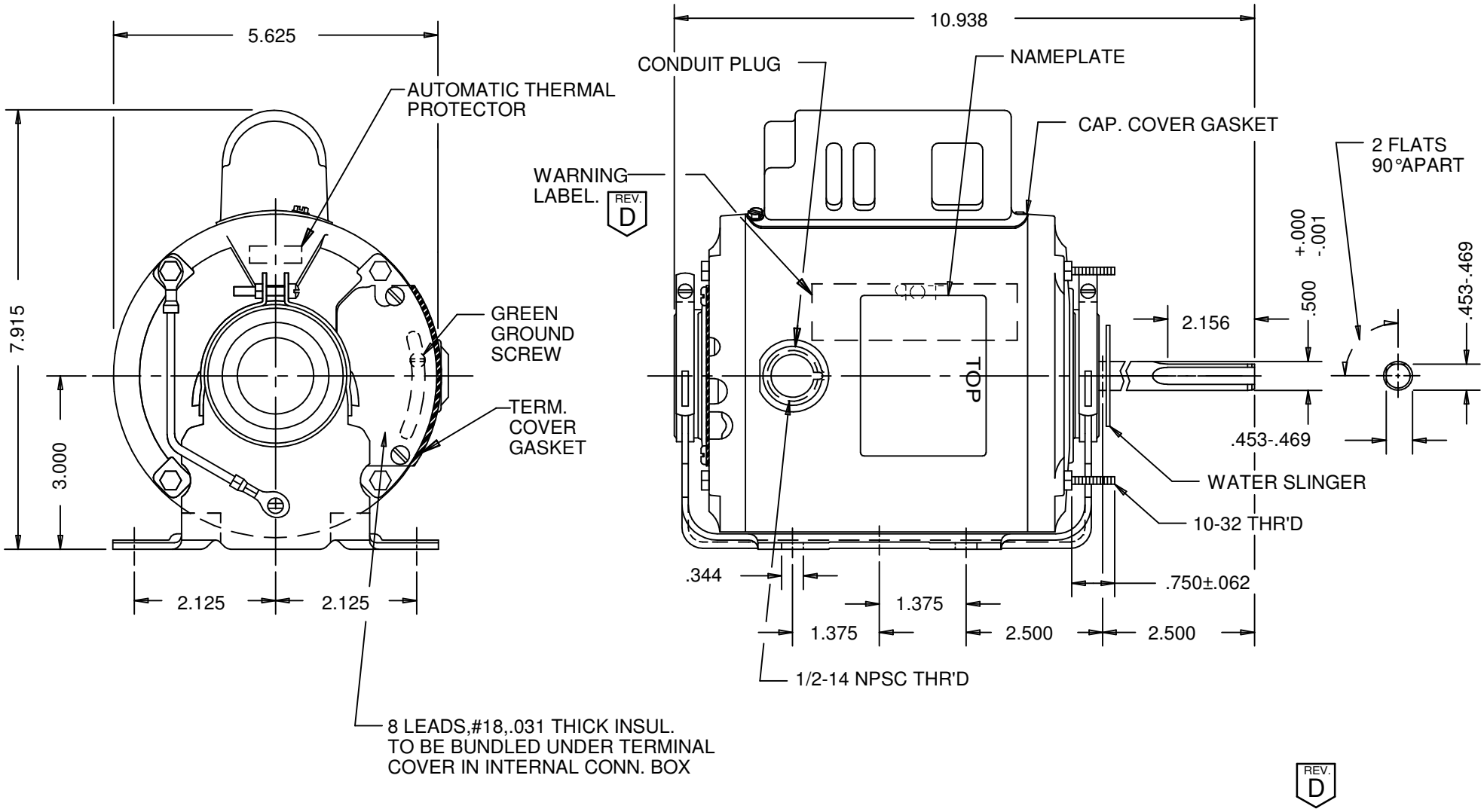

NIDEC MOTOR CORPORATION 31-May-14

MODEL	REF	CUSTOMER	HP	VOLTS	AMPS	HZ	RPM	ROTATION	CUSTOMER PN
K55HXLKW-3772		USEM	1/2	115/230	5.0/2.5	60	1700	CCW LEAD END REV	1850

SHEET NUMBER	REV	REVISION RECORD FOR: D1198-00
1 OF 1	D	ADDED WARNING LABEL AND DELETED NOTE " SHIPPED DETACHED 1- SHAFT ADAPTER KIT ".
REVISION DATE		
02-JUN-14		

INFORMATION DISCLOSED ON THIS DOCUMENT IS CONSIDERED PROPRIETARY AND SHALL NOT BE REPRODUCED OR DISCLOSED WITHOUT WRITTEN CONSENT OF NIDEC MOTOR CORPORATION

NIDEC MOTOR CORPORATION

ALL DIMENSIONS ARE FOR REFERENCE ONLY UNLESS TOLERANCE IS GIVEN

ISSUED BY	REVIEWED BY	ENGINEER APPROVED
I.GUTIERREZ	J.J.JUAREZ	J.J.JUAREZ

TITLE	CODE	ITEM NO.	SIZE
ASSEMBLED VIEW	V01	749414	A