R4A4

Product Specifications

EFFICIENT 14 SEER AIR CONDITIONER

ENVIRONMENTALLY BALANCED R-410A REFRIGERANT

1-1/2 THRU 5 TONS SPLIT SYSTEM

208/230 Volt, 1-phase, 60 Hz

REFRIGERATION CIRCUIT
- Scroll compressors on all models
- Copper tube / aluminum fin coil

EASY TO INSTALL AND SERVICE
- Easy Access service valves on all models
- External high and low refrigerant service ports
- Only two screws to access control panel
- Factory charged with R-410A refrigerant

BUILT TO LAST
- Pre-painted cabinet finish over galvanized steel
- Coated inlet grille with 2" (51mm) spacing or with 3/8" (10mm) grille spacing for extra protection

LIMITED WARRANTY*
- 5 year parts limited warranty (including compressor and coil)
  - With timely registration, an additional 5 year parts limited warranty (including compressor and coil)

* For residential applications only. See warranty certificate for complete details and restrictions, including warranty coverage for other applications.

c UL us LISTED

AHRI CERTIFIED™ www.ahridirectory.org

Use of the AHRI Certified TM Mark indicates a manufacturer's participation in the program. For verification of certification for individual products, go to www.ahridirectory.org .

Model Number	Size (tons)	Nominal BTU/hr	Min. Circuit Ampacity	Max. Fuse or Breaker	Operating Dimensions length/width(sq.) x height in. (mm)	Ship / Operating Weight lbs. (kg)
R4A418*KB	1-1/2	18,000	11.7	20	23-1/8 x 24-7/8 (587 x 632)	134/123 (61/56)
R4A424*KB	2	24,000	14.1	20	25-3/4 x 25-5/16 (654 x 642)	140/119 (84/54)
R4A430*KB	2-1/2	30,000	16.8	25	31-3/16 x 31-11/16 (792 x 804)	186/151 (84/68)
R4A436*KB	3	36,000	18.1	30	31-3/16 x 24-7/8 (792 x 632)	151/134 (68/87)
R4A442*KB	3-1/2	42,000	22.3	35	31-3/16 x 38-7/16 (792 x 977)	232/192 (105/87)
R4A448*KB	4	48,000	20.8	35	31-3/16 x 28-1/4 (792 x 718)	200/182 (91/82)
R4A460*KB	5	60,000	27.5	40	31-3/16 x 31-11/16 (792 x 804)	218/197 (99/89)

* **A** = 2" (51mm) spacing inlet grille or
. **G** = 3/8" (10mm) spacing inlet grille

OUTDOOR UNIT MODEL NUMBER IDENTIFICATION GUIDE (single phase)

Digit Position:	1	2	3	4	5, 6	7	8	9	10	11	12
Example Part Number:	R	4	A	4	18	A	K	B	1	0	0

REFRIGERANT
- 4 = R-410A

TYPE
- A = Air Conditioner
- H = Heat Pump

NOMINAL EFFICIENCY
- 4 = 14 SEER

NOMINAL CAPACITY
- 18 = 18,000 BTUH = 1-1/2 tons
- 24 = 24,000 BTUH = 2 tons
- 30 = 30,000 BTUH = 2-1/2 tons
- 36 = 36,000 BTUH = 3 tons
- 42 = 42,000 BTUH = 3-1/2 tons
- 48 = 48,000 BTUH = 4 tons
- 60 = 60,000 BTUH = 5 tons

FEATURES
- A = Wide Grille
- G = Coil Guard Grille

VOLTAGE
- K = 208/230-1-60

Sales Code

Engineering Revision

Extra Digit

Extra Digit

ACCESSORIES PART NUMBER IDENTIFICATION GUIDE

Digit Position:	1	2	3	4	5	6, 7	8, 9	10, 11
Example Part Number:	N	A	S	A	0	0 1	01	C H

BRANDING
- N = Non-Branded

PRODUCT GROUP
- A = Accessory

KIT USAGE
- S = Split System (AC & HP)

MAJOR SERIES
- A = Original
- B = 2nd Generation

REFRIGERANT
- 0 = Generic or Not Applicable
- 4 = R-410A

Product Identifier Number

Package Quantity

Type of Kit (Example: CH = Crankcase Heater)

Specifications subject to change without notice.

UNIT	SERIES	ELECTRICAL CHARACTERISTICS				A		B		C		D		E		F		G		H		I		J		K		OPERATING WEIGHT		SHIPPING WEIGHT		SHIPPING LENGTH / WIDTH (Sq.)		SHIPPING HEIGHT	
						INCH	MM	INCH	MM	INCH	MM	INCH	MM	INCH	MM	INCH	MM	INCH	MM	INCH	MM	INCH	MM	INCH	MM	INCH	MM	Lbs	Kgs	Lbs	Kgs	INCH	MM	INCH	MM
R4A418AKB100	1	Y	N	N	N	23 1/8	587.3	24 7/8	631.6	3/4	19.1	4 7/16	113.0	18 1/16	459.0	7 13/16	197.9	5/16	7.9	3	76.2	24 1/8	612.8	24 1/8	612.8	27 3/16	690.6	123	55.8	134	60.8	24 1/8	612.7	26 7/16	672.1
R4A418GKB100	1	Y	N	N	N	23 1/8	587.3	24 7/8	631.6	3/4	19.1	4 7/16	113.0	18 1/16	459.0	7 13/16	197.9	5/16	7.9	3	76.2	24 1/8	612.8	24 1/8	612.8	27 3/16	690.6	123	55.8	134	60.8	24 1/8	612.7	26 7/16	672.1
R4A424AKB100	1	Y	N	N	N	25 3/4	654.0	25 5/16	642.4	3/4	19.1	4 7/16	113.0	21 1/4	539.9	9 1/8	231.3	5/16	7.9	3	76.2	26 7/8	682.6	26 7/8	682.6	32 9/16	827.1	119	54.0	140	63.5	26 3/4	679.9	26 15/16	684.8
R4A424GKB100	1	Y	N	N	N	25 3/4	654.0	25 5/16	642.4	3/4	19.1	4 7/16	113.0	21 1/4	539.9	9 1/8	231.3	5/16	7.9	3	76.2	26 7/8	682.6	26 7/8	682.6	32 9/16	827.1	119	54.0	140	63.5	26 3/4	679.9	26 15/16	684.8
R4A430AKB100	1	Y	N	N	N	31 3/16	792.5	31 11/16	804.3	3/4	19.1	6 9/16	166.1	24 11/16	626.3	9 1/8	231.3	5/16	7.9	3	76.2	32 3/16	817.6	32 3/16	817.6	34	863.6	151	68.5	186	84.4	32 3/16	817.9	33 1/4	844.9
R4A430GKB100	1	Y	N	N	N	31 3/16	792.5	31 11/16	804.3	3/4	19.1	6 9/16	166.1	24 11/16	626.3	9 1/8	231.3	5/16	7.9	3	76.2	32 3/16	817.6	32 3/16	817.6	34	863.6	151	68.5	186	84.4	32 3/16	817.9	33 1/4	844.9
R4A436AKB100	1	Y	N	N	N	31 3/16	792.5	24 7/8	631.6	7/8	22.2	6 9/16	166.1	24 11/16	626.3	9 1/8	231.3	5/16	7.9	3	76.2	32 3/16	817.6	32 3/16	817.6	27 3/16	690.6	134	60.8	151	68.5	32 3/16	817.9	26 7/16	672.1
R4A436GKB100	1	Y	N	N	N	31 3/16	792.5	24 7/8	631.6	7/8	22.2	6 9/16	166.1	24 11/16	626.3	9 1/8	231.3	5/16	7.9	3	76.2	32 3/16	817.6	32 3/16	817.6	27 3/16	690.6	134	60.8	151	68.5	32 3/16	817.9	26 7/16	672.1
R4A442AKB100	1	Y	N	N	N	31 3/16	792.5	38 7/16	977.1	7/8	22.2	6 9/16	166.1	24 11/16	626.3	9 1/8	231.3	5/16	7.9	3	76.2	32 3/16	817.6	32 3/16	817.6	40 5/8	1031.9	192	87.1	232	105.2	32 3/16	817.9	36 1/8	917.7
R4A442GKB100	1	Y	N	N	N	31 3/16	792.5	38 7/16	977.1	7/8	22.2	6 9/16	166.1	24 11/16	626.3	9 1/8	231.3	5/16	7.9	3	76.2	32 3/16	817.6	32 3/16	817.6	40 5/8	1031.9	192	87.1	232	105.2	32 3/16	817.9	36 1/8	917.7
R4A448AKB100	1	Y	N	N	N	31 3/16	792.5	28 1/4	718.0	7/8	22.2	6 9/16	166.1	24 11/16	626.3	9 1/8	231.3	5/16	7.9	3	76.2	32 3/16	817.6	32 3/16	817.6	30 5/8	777.9	182	82.6	200	90.7	32 3/16	817.9	29 7/8	758.5
R4A448GKB100	1	Y	N	N	N	31 3/16	792.5	28 1/4	718.0	7/8	22.2	6 9/16	166.1	24 11/16	626.3	9 1/8	231.3	5/16	7.9	3	76.2	32 3/16	817.6	32 3/16	817.6	30 5/8	777.9	182	82.6	200	90.7	32 3/16	817.9	29 7/8	758.5
R4A460AKB100	1	Y	N	N	N	31 3/16	792.5	31 11/16	804.3	7/8	22.2	6 9/16	166.1	24 11/16	626.3	9 1/8	231.3	5/16	7.9	3	76.2	32 3/16	817.6	32 3/16	817.6	34	863.6	197	89.4	218	98.9	32 3/16	817.9	33 1/4	844.9
R4A460GKB100	1	Y	N	N	N	31 3/16	792.5	31 11/16	804.3	7/8	22.2	6 9/16	166.1	24 11/16	626.3	9 1/8	231.3	5/16	7.9	3	76.2	32 3/16	817.6	32 3/16	817.6	34	863.6	197	89.4	218	98.9	32 3/16	817.9	33 1/4	844.9

208-230-1-60	208/230-3-60	460-3-60	575-3-60

Y=YES
N=NO

NOTES:

1. ALLOW 24" (609.6) CLEARANCE TO SERVICE SIDE OF UNIT, 48" (1219.2) ABOVE UNIT, 6" (152.4) ON ONE SIDE, 12" (304.8) ON REMAINING SIDE, AND 24" (609.6) BETWEEN UNITS FOR PROPER AIRFLOW.
2. CENTER OF GRAVITY .
3. SERIES DESIGNATION IS THE 10TH POSITION OF THE UNIT MODEL NUMBER.

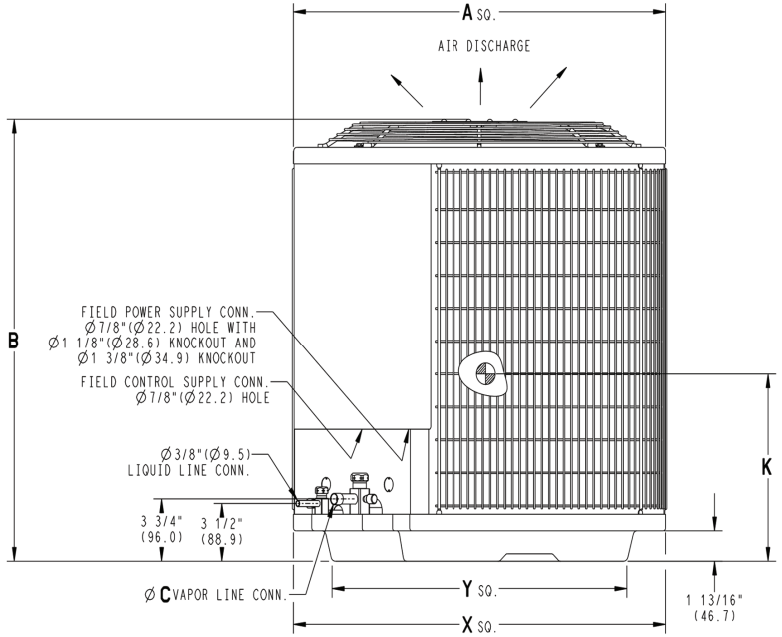

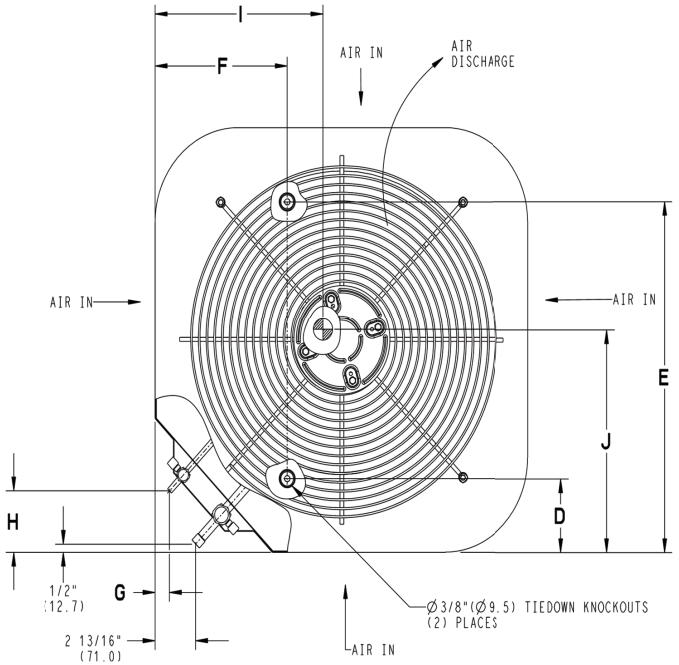

UNIT SIZE	"X" MINIMUM GROUND MOUNTING PAD APPLICATION DIMENSIONS		"Y" MINIMUM ROOF-TOP MOUNTING PAD APPLICATION DIMENSIONS	
18	23 1/8	587.3	17 7/8	454.6
24	25 3/4	654.0	20 7/16	518.5
30,36,42,48,60	31 3/16	792.5	22 15/16	583.2
	-	-	-	-

NOTE: ALL DIMENSIONS IN INCH (MM)

U.S. ECCN: Not Subject to Regulation (N.S.R.)

R4A4 SD5434-4 REV. A

PHYSICAL DATA (1- phase)							
Model Size	**18**	**24**	**30**	**36**	**42**	**48**	**60**
Nominal Cooling Capacity (BTU/hr)	18,000	24,000	30,000	36,000	42,000	48,000	60,000
Nominal SEER	14.0						
Compressor Type	Scroll						
REFRIGERANT	R- 410A						
Charge - lb(kg)	3.2(1.44)	3.73(1.69)	5.67(2.57)	4.67(2.12)	7.90(3.58)	8.31(3.77)	9.39(4.26)
Required Subcooling ° F (° C)	16 (8.8)	10 (5.5)	12(6.6)	11 (6)	9 (5)	11 (6)	13 (7.2)
COND FAN	Propeller Type, Direct Drive						
Air Discharge	Vertical						
Air Qty (CFM)	1600	1881	2614	3167	3700	3454	3700
Motor HP	1/12	1/12	1/10	1/5	1/4	1/4	1/4
Motor RPM	1100	1100	1100	1100	1110	1110	1100
COND COIL							
Face Area (Sq ft)	8.4	9.9	17.24	12.9	21.6	15.1	17.25
Fins per In.	25	25	25	25	25	20	25
Rows	1	1	1	1	1	2	2
Circuits	3	4	4	5	7	6	8
VALVE CONNECT. (In. ID)							
Vapor - in. (mm)	3/4 (19)	3/4 (19)	3/4 (19)	7/8 (22)	7/8 (22)	7/8 (22)	7/8 (22)
Liquid - in. (mm)	3/8 (10)						
REFRIGERANT TUBES* (In. OD)							
Vapor (0- 80 Ft Tube Length) in. (mm)	3/4 (19)	3/4 (19)	3/4 (19)	7/8 (22)	7/8 (22)	7/8 (22)	1 1/8 (29)
Liquid (0- 80 Ft Tube Length) in. (mm)	3/8 (10)						

* Recommended Vapor Tube Line size is for standard installations. These recommendations may not apply to "Long Line" installations. Consult the Long Line Application Guideline document before purchasing/installing line sets.

ELECTRICAL DATA (208/230- 1- 60, voltage range 197V - 253V)							
Model Size	**18**	**24**	**30**	**36**	**42**	**48**	**60**
Minimum Circuit Ampacity - **MCA** (amps)	11.7	14.1	16.8	18.1	22.3	20.8	27.5
Maximum OverCurrent Protective device - **MOCP** (amps)	20	20	25	30	35	35	40
Compressor **RLA** (Rated Load Amps) **LRA** (Locked Rotor Amps)	9 47.5	10.9 62.9	12.8 67.8	13.6 79.0	16.7 109.0	15.5 105.5	20.8 127.1
Fan Motor **FLA** (Full Load Amps)	.40	.50	.75	1.10	1.40	1.40	1.52

A-Weighted Sound Power Level - Without Sound Jacket								
Unit Size	**Standard Rating (dBA)**	**TYPICAL OCTAVE BAND SPECTRUM (without tone adjustment)**						
		125	**250**	**500**	**1000**	**2000**	**4000**	**8000**
18	75	45	53	57	62	60	53	48
24	72	46	57	60	64	61	56	50
30	73	50	56	63	64	61	58	54
36	75	51	61	65	67	63	60	53
42	73	49	58	63	64	59	56	50
48	76	53	61	64	66	62	60	51
60	75	54	57	63	64	62	58	51
Note: Tested in accordance with AHRI Standard 270-2008 (not listed in AHRI).								

A-Weighted Sound Power Level - With Sound Jacket								
Unit Size	**Standard Rating (dBA)**	**TYPICAL OCTAVE BAND SPECTRUM (without tone adjustment)**						
		125	**250**	**500**	**1000**	**2000**	**4000**	**8000**
18	75	45	53	58	62	61	55	49
24	73	47	59	61	64	61	55	48
30	72	49	57	62	63	60	57	52
36	75	51	62	65	66	62	60	52
42	72	50	58	62	63	58	55	47
48	73	55	61	64	63	60	57	48
60	73	54	59	63	63	60	56	48
Note: Tested in accordance with AHRI Standard 270-2008 (not listed in AHRI).								

* **A** = 2" (51mm) spacing inlet grille or
. **G** = 3/8" (10mm) spacing inlet grille

R-410A COOLING CAPACITY LOSS FOR VARIOUS LINE LENGTHS & TUBE DIAMETERS

Model Size	Liquid Line in.(mm)	Acceptable Vapor Line Sizes in. (mm)	Cooling Capacity Loss (%) at Total Equivalent Line Length, feet (m) Refer to Long Line Application Guideline to calculate equivalent length										
			Standard Application			Long Line Application (Requires Accessories)							
			25' (7.6)	50' (15.2)	80' (24.4)	81' (24.7)	100' (30.5)	125' (38.1)	150' (45.7)	175' (53.3)	200' (61)	225' (68.6)	250' (76.2)
18	3/8 (10)	1/2 (13)	1	2	3	3	4	6	7	8	9	10	12
		5/8 (16)	0	0	1	1	1	1	2	2	3	3	3
		3/4 (19)	0	0	0	0	0	1	1	1	1	1	1
24		5/8 (16)	0	1	1	1	2	3	3	4	4	5	6
		3/4 (19)	0	0	0	0	0	1	1	1	1	1	2
		7/8 (22)	0	0	0	0	0	0	0	0	0	0	1
30		5/8 (16)	1	2	3	3	3	4	5	6	7	8	9
		3/4 (19)	0	0	1	1	1	1	2	2	2	3	3
		7/8 (22)	0	0	0	0	0	1	1	1	1	1	1
36		5/8 (16)	1	2	4	4	5	6	7	9	10	11	13
		3/4 (19)	0	0	1	1	1	2	2	3	3	4	4
		7/8 (22)	0	0	0	0	0	1	1	1	1	2	2
42		3/4 (19)	0	1	2	2	2	3	4	4	5	6	6
		7/8 (22)	0	0	1	1	1	1	2	2	2	3	3
		1-1/8 (29)	0	0	0	0	0	0	0	0	0	0	1
48		3/4 (19)	0	1	2	2	3	4	5	5	6	7	8
		7/8 (22)	0	0	1	1	1	2	2	2	3	3	4
		1-1/8 (29)	0	0	0	0	0	0	0	0	1	1	1
60		3/4 (19)	1	2	4	4	5	6	7	9	10	11	12
		7/8 (22)	0	1	2	2	2	3	4	4	5	5	6
		1-1/8(29)	0	0	0	0	1	1	1	1	1	1	2

Consult the Long Line Application Guideline document before purchasing/installing line sets.

Applications in shaded area may have height restrictions that limit allowable total equivalent length when outdoor unit is below indoor unit.

COOLING PERFORMANCE FOR COMBINATION RATINGS Indoor Models

For complete ratings information, use the AHRI website directory search: www.AHRIdirectory.org.
New ratings may be listed online before Specification Sheets are updated.

Unit Size	INDOOR MODEL	AHRI STANDARD RATINGS COOLING CAPACITY	FACTORY ENHANCE	SEER STANDARD	SEER TDR	SEER TXV	EER	FURNACE MODEL
18	EA*4X19L17A*	17,500	TXV		14.00		11.50	
24	EA*4X25L17A*	23,400	TXV		14.00		11.50	
30	EA*4X37L21A*	29,600	TXV		14.50		12.00	
36	EA*4X37L21A*	34,200	TXV		14.00		12.00	
42	EA*4X43L21A*	41,000	TXV		14.00		12.00	
48	EA*4X61L24A*	45,000	TXV		14.50		11.50	
60	EA*4X60L24A*	56,500	TXV		14.00		11.50	

* **A** = 2" (51mm) spacing inlet grille or
. **G** = 3/8" (10mm) spacing inlet grille

TESTED AHRI COMBINATION RATINGS*

NOTE: Ratings contained in this document are subject to change at any time.

For AHRI ratings certificates, please refer to the AHRI directory. **www.ahridirectory.org**

Additional ratings and system combinations can be accessed via the Maratherm database:
http://www.icpeqp.com/AHRIratings/ratings.aspx?Brand=Maratherm

Or scan this QR code:

EXPANDED COOLING PERFORMANCE RATINGS For Outdoor / Indoor Models

For complete ratings information, use the AHRI website directory search: www.AHRIdirectory.org.
New ratings may be listed online before Specification Sheets are updated.

EVAPORATOR AIR		CONDENSER ENTERING AIR TEMPERATURES °F (°C)																	
		75 (23.9)			85 (29.4)			95 (35)			105 (40.6)			115 (46.1)			125 (51.7)		
	EWB	Capacity MBtuh		Total Systm	Capacity MBtuh		Total Systm	Capacity MBtuh		Total Systm	Capacity MBtuh		Total Systm	Capacity MBtuh		Total Systm	Capacity MBtuh		Total Systm
CFM	°F	Total	Sens‡	KW**	Total	Sens‡	KW**	Total	Sens‡	KW**	Total	Sens‡	KW**	Total	Sens‡	KW**	Total	Sens‡	KW**
018 Size Outdoor Section With EA*4X19L17A* Indoor Cooling																			
525	72	20.84	11.15	1.18	20.08	10.86	1.33	19.26	10.56	1.49	18.34	10.22	1.67	17.28	9.84	1.89	16.07	9.40	2.13
	67	19.05	13.80	1.19	18.30	13.49	1.34	17.50	13.16	1.50	16.60	12.80	1.68	15.58	12.39	1.89	14.40	11.93	2.13
	63††	17.78	13.32	1.20	17.04	12.99	1.34	16.24	12.64	1.50	15.35	12.25	1.68	14.35	11.82	1.89	13.21	11.33	2.14
	62	17.42	16.39	1.20	16.70	16.06	1.34	15.92	15.68	1.50	15.12	15.12	1.68	14.34	14.34	1.89	13.45	13.45	2.13
	57	17.00	17.00	1.20	16.41	16.41	1.34	15.79	15.79	1.50	15.10	15.10	1.68	14.32	14.32	1.89	13.43	13.43	2.13
600	72	21.18	11.76	1.21	20.40	11.48	1.35	19.56	11.17	1.52	18.61	10.83	1.70	17.52	10.45	1.92	16.27	10.01	2.16
	67	19.36	14.78	1.22	18.61	14.48	1.36	17.78	14.15	1.52	16.86	13.79	1.71	15.81	13.37	1.92	14.62	12.90	2.16
	63††	18.10	14.24	1.23	17.35	13.91	1.37	16.53	13.56	1.53	15.62	13.17	1.71	14.59	12.73	1.92	13.42	12.24	2.16
	62	17.79	17.69	1.23	17.14	17.14	1.37	16.49	16.49	1.53	15.76	15.76	1.71	14.94	14.94	1.92	14.00	14.00	2.16
	57	17.72	17.72	1.23	17.11	17.11	1.37	16.46	16.46	1.53	15.74	15.74	1.71	14.92	14.92	1.92	13.98	13.98	2.16
675	72	21.42	12.36	1.23	20.63	12.08	1.38	19.76	11.77	1.55	18.80	11.43	1.73	17.69	11.05	1.94	16.41	10.61	2.19
	67	19.60	15.75	1.25	18.83	15.44	1.39	17.99	15.11	1.55	17.05	14.75	1.73	15.99	14.33	1.95	14.77	13.85	2.19
	63††	18.34	15.14	1.26	17.57	14.81	1.40	16.74	14.45	1.56	15.82	14.06	1.74	14.77	13.61	1.95	13.59	13.10	2.19
	62	18.33	18.33	1.25	17.71	17.71	1.40	17.04	17.04	1.55	16.28	16.28	1.74	15.43	15.43	1.95	14.46	14.46	2.19
	57	18.31	18.31	1.25	17.68	17.68	1.40	17.01	17.01	1.55	16.26	16.26	1.74	15.41	15.41	1.95	14.44	14.44	2.19

EVAPORATOR AIR		CONDENSER ENTERING AIR TEMPERATURES °F (°C)																	
		75 (23.9)			85 (29.4)			95 (35)			105 (40.6)			115 (46.1)			125 (51.7)		
	EWB	Capacity MBtuh		Total Systm	Capacity MBtuh		Total Systm	Capacity MBtuh		Total Systm	Capacity MBtuh		Total Systm	Capacity MBtuh		Total Systm	Capacity MBtuh		Total Systm
CFM	°F	Total	Sens‡	KW**	Total	Sens‡	KW**	Total	Sens‡	KW**	Total	Sens‡	KW**	Total	Sens‡	KW**	Total	Sens‡	KW**
024 Size Outdoor Section With EA*4X25L17A* Indoor Cooling																			
700	72	27.81	14.89	1.62	26.74	14.49	1.80	25.61	14.07	2.00	24.39	13.62	2.23	23.06	13.14	2.51	21.56	12.60	2.83
	67	25.46	18.45	1.62	24.46	18.04	1.80	23.40	17.61	2.00	22.25	17.13	2.23	21.01	16.63	2.51	19.58	16.06	2.83
	63††	23.79	17.82	1.62	22.84	17.40	1.80	21.83	16.94	2.00	20.74	16.47	2.24	19.53	15.94	2.52	18.16	15.36	2.85
	62	23.31	21.92	1.62	22.38	21.48	1.80	21.40	21.01	2.00	20.37	20.37	2.24	19.43	19.43	2.51	18.33	18.33	2.84
	57	22.74	22.74	1.62	22.00	22.00	1.80	21.20	21.20	2.00	20.34	20.34	2.24	19.39	19.39	2.51	18.30	18.30	2.84
800	72	28.26	15.70	1.66	27.15	15.30	1.84	25.97	14.87	2.04	24.70	14.42	2.27	23.33	13.94	2.54	21.80	13.40	2.87
	67	25.87	19.75	1.66	24.84	19.33	1.84	23.75	18.90	2.04	22.56	18.42	2.27	21.27	17.91	2.55	19.81	17.34	2.87
	63††	24.22	19.04	1.66	23.25	18.61	1.84	22.19	18.15	2.04	21.05	17.67	2.28	19.82	17.14	2.55	18.40	16.54	2.88
	62	23.79	23.64	1.66	22.94	22.94	1.84	22.09	22.09	2.04	21.17	21.17	2.27	20.16	20.16	2.55	19.00	19.00	2.87
	57	23.69	23.69	1.66	22.90	22.90	1.84	22.06	22.06	2.04	21.14	21.14	2.27	20.13	20.13	2.55	18.98	18.98	2.87
900	72	28.57	16.50	1.70	27.42	16.10	1.87	26.21	15.67	2.08	24.91	15.21	2.31	23.51	14.73	2.58	21.94	14.19	2.90
	67	26.18	21.03	1.70	25.11	20.60	1.88	23.99	20.16	2.08	22.77	19.68	2.31	21.46	19.16	2.58	19.98	18.58	2.91
	63††	24.53	20.22	1.70	23.52	19.79	1.88	22.44	19.33	2.08	21.28	18.83	2.32	20.02	18.30	2.59	18.58	17.68	2.92
	62	24.50	24.50	1.70	23.67	23.67	1.88	22.78	22.78	2.08	21.82	21.82	2.31	20.76	20.76	2.59	19.55	19.55	2.91
	57	24.47	24.47	1.70	23.64	23.64	1.88	22.75	22.75	2.08	21.79	21.79	2.31	20.73	20.73	2.59	19.52	19.52	2.91

‡ Sensible capacities shown are based on 80°F (27°C) entering air at the indoor coil. For sensible capacities at other than 80°F (27°C), deduct 835 Btuh (245 kW) per 1000 CFM (480 L/S) of indoor coil air for each degree below 80°F (27°C), or add 835 Btuh (245 kW) per 1000 CFM (480 L/S) of indoor coil air per degree above 80°F (27°C).

Expanded cooling capacities are based on indoor and outdoor unit at the same elevation per AHRI standard 210/240- 2008. If additional tubing length and/or indoor unit is located above outdoor unit, a slight variation in capacity may occur.

** System kw is total of indoor and outdoor unit kilowatts.

†† At TVA rating indoor condition (75°F edb/63°F ewb). All other indoor air temperatures are at 80°F edb.

NOTE: When the required data falls between the published data, interpolation may be performed. Extrapolation is not an acceptable practice.
EWB — Entering Wet Bulb

EVAPORATOR AIR		CONDENSER ENTERING AIR TEMPERATURES °F (°C)																	
		75 (23.9)			85 (29.4)			95 (35)			105 (40.6)			115 (46.1)			125 (51.7)		
	EWB	Capacity MBtuh		Total Systm	Capacity MBtuh		Total Systm	Capacity MBtuh		Total Systm	Capacity MBtuh		Total Systm	Capacity MBtuh		Total Systm	Capacity MBtuh		Total Systm
CFM	°F (°C)	Total	Sens‡	KW**	Total	Sens‡	KW**	Total	Sens‡	KW**	Total	Sens‡	KW**	Total	Sens‡	KW**	Total	Sens‡	KW**
030 Size Outdoor Section With EA*4X37L21A* Indoor Cooling																			
	72 (22.2)	35.37	18.97	1.98	33.85	18.40	2.19	32.21	17.80	2.42	30.43	17.15	2.69	28.49	16.45	3.00	26.39	15.71	3.35
	67 (19.4)	32.03	23.39	1.98	30.63	22.81	2.19	29.12	22.19	2.42	27.48	21.53	2.69	25.70	20.81	2.99	23.76	20.05	3.35
875	63 (17.2)††	29.66	22.45	1.98	28.35	21.87	2.19	26.94	21.25	2.42	25.41	20.58	2.69	23.73	19.86	3.00	21.91	19.08	3.35
	62 (16.7)	29.11	27.69	1.98	27.84	27.08	2.19	26.50	26.38	2.42	25.23	25.23	2.69	23.91	23.91	2.99	22.43	22.43	3.35
	57 (13.9)	28.50	28.50	1.99	27.49	27.49	2.19	26.40	26.40	2.42	25.19	25.19	2.69	23.87	23.87	2.99	22.40	22.40	3.35
	72 (22.2)	36.01	20.05	2.03	34.42	19.47	2.23	32.71	18.86	2.47	30.87	18.20	2.74	28.86	17.49	3.05	26.67	16.74	3.40
	67 (19.4)	32.63	25.08	2.03	31.17	24.49	2.23	29.60	23.86	2.47	27.91	23.19	2.73	26.07	22.46	3.04	24.07	21.67	3.40
1000	63 (17.2)††	30.24	24.03	2.03	28.87	23.43	2.24	27.40	22.80	2.47	25.81	22.12	2.74	24.09	21.38	3.04	22.21	20.58	3.40
	62 (16.7)	29.92	29.65	2.03	28.74	28.74	2.23	27.56	27.56	2.47	26.27	26.27	2.73	24.85	24.85	3.04	23.28	23.28	3.40
	57 (13.9)	29.78	29.78	2.03	28.70	28.70	2.23	27.52	27.52	2.47	26.23	26.23	2.73	24.81	24.81	3.04	23.24	23.24	3.40
	72 (22.2)	36.46	21.09	2.08	34.82	20.51	2.28	33.07	19.89	2.52	31.16	19.23	2.79	29.09	18.51	3.09	26.86	17.74	3.45
	67 (19.4)	33.08	26.72	2.08	31.57	26.12	2.28	29.96	25.48	2.51	28.22	24.80	2.78	26.35	24.05	3.09	24.33	23.23	3.45
1125	63 (17.2)††	30.68	25.55	2.08	29.26	24.95	2.28	27.76	24.30	2.52	26.12	23.60	2.78	24.36	22.84	3.09	22.47	21.99	3.45
	62 (16.7)	30.90	30.90	2.08	29.75	29.75	2.28	28.49	28.49	2.51	27.13	27.13	2.78	25.62	25.62	3.09	23.98	23.98	3.45
	57 (13.9)	30.85	30.85	2.08	29.71	29.71	2.28	28.45	28.45	2.51	27.09	27.09	2.78	25.59	25.59	3.09	23.94	23.94	3.45

EVAPORA-TOR AIR		CONDENSER ENTERING AIR TEMPERATURES °F (°C)																	
		75 (23.9)			85 (29.4)			95 (35)			105 (40.6)			115 (46.1)			125 (51.7)		
	EWB	Capacity MBtuh		Total Systm	Capacity MBtuh		Total Systm	Capacity MBtuh		Total Systm	Capacity MBtuh		Total Systm	Capacity MBtuh		Total Systm	Capacity MBtuh		Total Systm
CFM	°F	Total	Sens‡	KW**	Total	Sens‡	KW**	Total	Sens‡	KW**	Total	Sens‡	KW**	Total	Sens‡	KW**	Total	Sens‡	KW**
036 Size Outdoor Section With EA*4X37L21A* Indoor Cooling																			
	72	41.01	22.33	2.30	39.34	21.71	2.58	37.16	20.92	2.85	34.76	20.05	3.16	32.31	19.19	3.53	29.95	18.38	4.00
	67	38.18	28.11	2.30	36.67	27.49	2.57	34.60	26.64	2.84	32.34	25.73	3.14	30.03	24.81	3.50	27.81	23.93	3.98
1050	63††	35.95	27.24	2.31	34.52	26.60	2.58	32.59	25.75	2.84	30.42	24.81	3.13	28.19	23.85	3.50	26.15	22.98	3.98
	62	35.34	33.63	2.31	33.97	32.97	2.57	32.13	32.02	2.83	30.31	30.31	3.13	28.47	28.47	3.50	26.72	26.72	3.98
	57	34.72	34.72	2.32	33.59	33.59	2.58	32.04	32.04	2.84	30.27	30.27	3.13	28.43	28.43	3.50	26.69	26.69	3.98
	72	41.38	23.50	2.36	39.65	22.88	2.64	37.35	22.06	2.91	34.95	21.21	3.22	32.45	20.34	3.59	30.04	19.50	4.06
	67	38.62	30.04	2.36	37.06	29.41	2.63	34.94	28.56	2.90	32.63	27.64	3.20	30.27	26.71	3.56	27.99	25.80	4.04
1200	63††	36.46	29.05	2.37	34.99	28.41	2.63	32.98	27.54	2.89	30.76	26.59	3.19	28.46	25.61	3.55	26.38	24.71	4.04
	62	36.09	35.91	2.37	34.84	34.84	2.63	33.16	33.16	2.89	31.29	31.29	3.19	29.34	29.34	3.56	27.44	27.44	4.04
	57	36.00	36.00	2.37	34.79	34.79	2.63	33.12	33.12	2.89	31.24	31.24	3.19	29.30	29.30	3.56	27.42	27.42	4.04
	72	41.60	24.63	2.42	39.82	24.00	2.70	37.54	23.20	2.97	35.04	22.33	3.28	32.50	21.46	3.65	30.06	20.63	4.12
	67	38.92	31.92	2.41	37.32	31.28	2.68	35.15	30.42	2.95	32.81	29.49	3.26	30.41	28.52	3.62	28.13	27.55	4.10
1350	63††	36.82	30.81	2.42	35.31	30.16	2.69	33.26	29.28	2.95	31.00	28.31	3.25	28.69	27.30	3.62	26.56	26.31	4.10
	62	37.07	37.07	2.42	35.77	35.77	2.68	33.98	33.98	2.95	32.01	32.01	3.25	29.98	29.98	3.62	27.99	27.99	4.10
	57	37.02	37.02	2.42	35.73	35.73	2.68	33.95	33.95	2.95	31.98	31.98	3.25	29.95	29.95	3.62	27.97	27.97	4.10

‡ Sensible capacities shown are based on 80°F (27°C) entering air at the indoor coil. For sensible capacities at other than 80°F (27°C), deduct 835 Btuh (245 kW) per 1000 CFM (480 L/S) of indoor coil air for each degree below 80°F (27°C), or add 835 Btuh (245 kW) per 1000 CFM (480 L/S) of indoor coil air per degree above 80°F (27°C).

Expanded cooling capacities are based on indoor and outdoor unit at the same elevation per AHRI standard 210/240- 2008. If additional tubing length and/or indoor unit is located above outdoor unit, a slight variation in capacity may occur.

** System kw is total of indoor and outdoor unit kilowatts.

†† At TVA rating indoor condition (75°F edb/63°F ewb). All other indoor air temperatures are at 80°F edb.

NOTE: When the required data falls between the published data, interpolation may be performed. Extrapolation is not an acceptable practice.
EWB — Entering Wet Bulb

EVAPORATOR AIR		CONDENSER ENTERING AIR TEMPERATURES °F (°C)																	
		75 (23.9)			85 (29.4)			95 (35)			105 (40.6)			115 (46.1)			125 (51.7)		
	EWB	Capacity MBtuh		Total Systm	Capacity MBtuh		Total Systm	Capacity MBtuh		Total Systm	Capacity MBtuh		Total Systm	Capacity MBtuh		Total Systm	Capacity MBtuh		Total Systm
CFM	°F (°C)	Total	Sens‡	KW**	Total	Sens‡	KW**	Total	Sens‡	KW**	Total	Sens‡	KW**	Total	Sens‡	KW**	Total	Sens‡	KW**
042 Size Outdoor Section With EA*4X43L21A* Indoor Cooling																			
1225	72 (22.2)	49.83	26.42	2.82	47.55	25.60	3.10	45.16	24.75	3.41	42.64	23.86	3.76	39.95	22.93	4.16	37.09	21.94	4.61
	67 (19.4)	45.13	32.73	2.82	43.08	31.92	3.10	40.91	31.06	3.41	38.62	30.17	3.76	36.20	29.23	4.15	33.59	28.23	4.60
	63 (17.2)††	41.79	31.39	2.82	39.89	30.57	3.10	37.89	29.72	3.41	35.77	28.83	3.76	33.51	27.89	4.15	31.09	26.89	4.60
	62 (16.7)	41.11	38.88	2.82	39.33	39.09	3.10	37.65	37.65	3.40	35.94	35.94	3.75	34.10	34.10	4.15	32.10	32.10	4.60
	57 (13.9)	40.65	40.65	2.82	39.17	39.17	3.10	37.59	37.59	3.40	35.89	35.89	3.75	34.05	34.05	4.15	32.05	32.05	4.60
1400	72 (22.2)	50.64	27.90	2.89	48.27	27.07	3.17	45.78	26.21	3.48	43.15	25.30	3.83	40.38	24.35	4.23	37.43	23.36	4.68
	67 (19.4)	45.91	35.11	2.89	43.77	34.27	3.17	41.53	33.40	3.48	39.15	32.48	3.83	36.64	31.51	4.23	33.98	30.48	4.67
	63 (17.2)††	42.53	33.58	2.90	40.56	32.75	3.17	38.48	31.88	3.48	36.27	30.96	3.83	33.95	30.00	4.22	31.48	28.95	4.67
	62 (16.7)	42.46	42.46	2.89	40.86	40.86	3.17	39.15	39.15	3.48	37.32	37.32	3.83	35.34	35.34	4.22	33.20	33.20	4.67
	57 (13.9)	42.39	42.39	2.89	40.80	40.80	3.17	39.09	39.09	3.48	37.26	37.26	3.83	35.30	35.30	4.22	33.16	33.16	4.67
1575	72 (22.2)	51.24	29.33	2.96	48.78	28.49	3.24	46.20	27.61	3.55	43.50	26.69	3.91	40.65	25.73	4.31	37.62	24.73	4.76
	67 (19.4)	46.49	37.39	2.96	44.28	36.53	3.24	41.97	35.63	3.55	39.54	34.69	3.90	36.99	33.68	4.30	34.30	32.54	4.75
	63 (17.2)††	43.09	35.69	2.97	41.05	34.84	3.24	38.91	33.94	3.55	36.66	32.99	3.90	34.30	31.97	4.30	31.82	31.65	4.74
	62 (16.7)	43.86	43.86	2.97	42.15	42.15	3.24	40.34	40.34	3.55	38.40	38.40	3.90	36.31	36.31	4.30	34.05	34.05	4.75
	57 (13.9)	43.79	43.79	2.97	42.10	42.10	3.24	40.28	40.28	3.55	38.35	38.35	3.90	36.26	36.26	4.30	34.01	34.01	4.75

EVAPORA-TOR AIR		CONDENSER ENTERING AIR TEMPERATURES °F (°C)																	
		75 (23.9)			85 (29.4)			95 (35)			105 (40.6)			115 (46.1)			125 (51.7)		
	EWB	Capacity MBtuh		Total Systm	Capacity MBtuh		Total Systm	Capacity MBtuh		Total Systm	Capacity MBtuh		Total Systm	Capacity MBtuh		Total Systm	Capacity MBtuh		Total Systm
CFM	°F	Total	Sens‡	KW**	Total	Sens‡	KW**	Total	Sens‡	KW**	Total	Sens‡	KW**	Total	Sens‡	KW**	Total	Sens‡	KW**
048 Size Outdoor Section With EA*4X61L24A* Indoor Cooling																			
1400	72	53.91	26.70	3.12	51.70	25.95	3.46	49.29	25.14	3.81	46.61	24.25	4.20	43.50	23.23	4.66	39.94	22.07	5.22
	67	49.07	33.08	3.15	47.03	32.30	3.47	44.83	31.48	3.81	42.36	30.56	4.19	39.52	29.52	4.65	36.26	28.33	5.22
	63††	45.60	31.80	3.16	43.67	31.02	3.48	41.61	30.19	3.81	39.31	29.27	4.18	36.66	28.22	4.64	33.61	27.02	5.22
	62	44.81	39.26	3.16	42.96	38.43	3.48	41.03	40.90	3.80	39.14	39.14	4.18	36.99	36.99	4.64	34.49	34.49	5.22
	57	44.02	44.02	3.16	42.51	42.51	3.48	40.91	40.91	3.80	39.08	39.08	4.18	36.94	36.94	4.64	34.44	34.44	5.22
1600	72	54.74	28.18	3.20	52.46	27.42	3.54	49.97	26.60	3.89	47.17	25.68	4.28	43.95	24.64	4.74	40.30	23.48	5.30
	67	49.91	35.43	3.22	47.78	34.64	3.55	45.50	33.80	3.89	42.95	32.87	4.27	40.01	31.79	4.73	36.67	30.58	5.30
	63††	46.41	33.99	3.23	44.41	33.19	3.55	42.28	32.35	3.89	39.89	31.40	4.26	37.15	30.32	4.72	34.04	29.09	5.30
	62	45.97	45.97	3.23	44.36	44.36	3.55	42.62	42.62	3.89	40.65	40.65	4.27	38.35	38.35	4.73	35.68	35.68	5.30
	57	45.90	45.90	3.23	44.29	44.29	3.55	42.56	42.56	3.89	40.59	40.59	4.27	38.30	38.30	4.73	35.63	35.63	5.30
1800	72	55.35	29.59	3.27	53.00	28.82	3.62	50.43	27.99	3.97	47.55	27.07	4.35	44.26	26.02	4.82	40.51	24.83	5.38
	67	50.51	37.70	3.29	48.34	36.90	3.63	45.99	36.05	3.97	43.37	35.09	4.35	40.38	33.98	4.81	37.00	32.68	5.38
	63††	47.02	36.10	3.31	44.97	35.29	3.63	42.77	34.42	3.97	40.33	33.45	4.34	37.54	32.33	4.81	34.39	30.98	5.38
	62	47.51	47.51	3.31	45.80	45.80	3.63	43.96	43.96	3.97	41.87	41.87	4.35	39.44	39.44	4.81	36.63	36.63	5.38
	57	47.45	47.45	3.31	45.74	45.74	3.63	43.91	43.91	3.97	41.82	41.82	4.35	39.40	39.40	4.81	36.58	36.58	5.38

‡ Sensible capacities shown are based on 80°F (27°C) entering air at the indoor coil. For sensible capacities at other than 80°F (27°C), deduct 835 Btuh (245 kW) per 1000 CFM (480 L/S) of indoor coil air for each degree below 80°F (27°C), or add 835 Btuh (245 kW) per 1000 CFM (480 L/S) of indoor coil air per degree above 80°F (27°C).

Expanded cooling capacities are based on indoor and outdoor unit at the same elevation per AHRI standard 210/240- 2008. If additional tubing length and/or indoor unit is located above outdoor unit, a slight variation in capacity may occur.

** System kw is total of indoor and outdoor unit kilowatts.

†† At TVA rating indoor condition (75°F edb/63°F ewb). All other indoor air temperatures are at 80°F edb.

NOTE: When the required data falls between the published data, interpolation may be performed. Extrapolation is not an acceptable practice.
EWB — Entering Wet Bulb

EVAPORA-TOR AIR		CONDENSER ENTERING AIR TEMPERATURES °F (°C)																	
		75 (23.9)			85 (29.4)			95 (35)			105 (40.6)			115 (46.1)			125 (51.7)		
	EWB	Capacity MBtuh		Total Systm	Capacity MBtuh		Total Systm	Capacity MBtuh		Total Systm	Capacity MBtuh		Total Systm	Capacity MBtuh		Total Systm	Capacity MBtuh		Total Systm
CFM	°F	Total	Sens‡	KW**	Total	Sens‡	KW**	Total	Sens‡	KW**	Total	Sens‡	KW**	Total	Sens‡	KW**	Total	Sens‡	KW**
060 Size Outdoor Section With EA*4X60L24A* Indoor Cooling																			
	72	68.41	35.82	4.01	65.35	34.67	4.39	62.15	33.49	4.86	58.70	32.23	5.39	55.01	30.89	5.96	50.87	29.41	6.55
	67	62.24	44.04	4.01	59.41	42.88	4.38	56.50	41.69	4.83	53.38	40.43	5.35	50.00	39.08	5.91	46.23	37.59	6.49
1750	63††	57.78	42.37	4.02	55.13	41.19	4.37	52.41	39.99	4.81	49.54	38.75	5.32	46.39	37.40	5.87	42.89	35.91	6.45
	62	56.92	52.17	4.02	54.40	50.96	4.37	51.84	49.69	4.81	49.16	49.16	5.32	46.64	46.64	5.88	43.73	43.73	6.46
	57	55.64	55.64	4.02	53.56	53.56	4.37	51.43	51.43	4.81	49.13	49.13	5.32	46.56	46.56	5.88	43.68	43.68	6.46
	72	69.54	37.55	4.10	66.36	36.39	4.49	63.04	35.18	4.96	59.50	33.91	5.49	55.63	32.53	6.06	51.36	31.03	6.66
	67	63.30	46.83	4.11	60.35	45.64	4.47	57.34	44.44	4.93	54.11	43.16	5.45	50.61	41.77	6.01	46.74	40.24	6.60
2000	63††	58.79	44.95	4.11	56.04	43.76	4.47	53.23	42.55	4.91	50.24	41.27	5.42	47.00	39.89	5.98	43.39	38.33	6.56
	62	58.25	55.83	4.11	55.72	55.33	4.47	53.37	53.37	4.91	50.91	50.91	5.43	48.16	48.16	5.99	45.09	45.09	6.58
	57	57.80	57.80	4.11	55.59	55.59	4.47	53.30	53.30	4.91	50.84	50.84	5.43	48.11	48.11	5.99	45.03	45.03	6.58
	72	70.37	39.17	4.20	67.10	37.99	4.59	63.67	36.77	5.06	60.02	35.48	5.59	56.04	34.08	6.17	51.66	32.55	6.76
	67	64.08	49.47	4.20	61.08	48.28	4.57	57.95	47.04	5.03	54.64	45.73	5.55	51.07	44.31	6.12	47.12	42.69	6.70
2250	63††	59.56	47.41	4.20	56.73	46.20	4.56	53.82	44.95	5.01	50.77	43.65	5.52	47.44	42.21	6.08	43.78	40.57	6.66
	62	59.69	59.69	4.20	57.32	57.32	4.56	54.90	54.90	5.02	52.28	52.28	5.53	49.41	49.41	6.10	46.17	46.17	6.69
	57	59.58	59.58	4.20	57.25	57.25	4.56	54.83	54.83	5.02	52.23	52.23	5.53	49.35	49.35	6.10	46.12	46.12	6.69

‡ Sensible capacities shown are based on 80°F (27°C) entering air at the indoor coil. For sensible capacities at other than 80°F (27°C), deduct 835 Btuh (245 kW) per 1000 CFM (480 L/S) of indoor coil air for each degree below 80°F (27°C), or add 835 Btuh (245 kW) per 1000 CFM (480 L/S) of indoor coil air per degree above 80°F (27°C).

Expanded cooling capacities are based on indoor and outdoor unit at the same elevation per AHRI standard 210/240- 2008. If additional tubing length and/or indoor unit is located above outdoor unit, a slight variation in capacity may occur.

** System kw is total of indoor and outdoor unit kilowatts.

†† At TVA rating indoor condition (75°F edb/63°F ewb). All other indoor air temperatures are at 80°F edb.

NOTE: When the required data falls between the published data, interpolation may be performed. Extrapolation is not an acceptable practice.
EWB — Entering Wet Bulb

CONDENSER ONLY RATINGS

SST °F (°C)		CONDENSER ENTERING AIR TEMPERATURES °F (°C)							
		55 (12.78)	65 (18.33)	75 (23.89)	85 (29.44)	95 (35.0)	105 (40.56)	115 (46.11)	125 (51.67)
R4A418(A,G)KB									
30 (-1.11)	TCG	16.00	14.90	13.90	12.90	12.00	10.90	9.80	8.60
	SDT	73.60	83.20	92.80	102.60	112.40	122.40	132.30	142.40
	KW	0.77	0.88	0.99	1.12	1.27	1.44	1.65	1.88
35 (1.67)	TCG	17.60	16.50	15.40	14.40	13.40	12.20	11.00	9.80
	SDT	75.00	84.60	94.30	104.00	113.80	123.50	133.50	143.50
	KW	0.77	0.88	1.00	1.13	1.28	1.46	1.66	1.90
40 (4.44)	TCG	19.40	18.20	17.10	16.00	14.90	13.70	12.40	11.00
	SDT	76.50	86.10	95.80	105.40	115.00	124.80	134.60	144.60
	KW	0.77	0.88	1.00	1.14	1.29	1.47	1.67	1.91
45 (7.22)	TCG	21.20	20.00	18.90	17.70	16.50	15.20	13.80	12.30
	SDT	78.00	87.50	97.10	106.70	116.40	126.10	135.90	145.70
	KW	0.77	0.88	1.01	1.14	1.30	1.48	1.69	1.93
50 (10.0)	TCG	23.20	22.00	20.80	19.50	18.30	16.90	15.40	13.80
	SDT	79.30	88.90	98.50	108.10	117.70	127.40	137.10	146.90
	KW	0.76	0.88	1.01	1.15	1.30	1.49	1.70	1.94
55 (12.78)	TCG	25.30	24.00	22.80	21.50	20.10	18.70	17.10	15.40
	SDT	80.80	90.40	100.00	109.50	119.10	128.80	138.40	148.00
	KW	0.75	0.87	1.00	1.15	1.31	1.50	1.71	1.95
R4A424(A,G)KB									
30 (-1.11)	TCG	21.30	20.10	18.90	17.70	16.60	15.40	14.20	13.00
	SDT	69.90	79.40	88.80	98.30	107.80	117.30	126.70	136.10
	KW	1.05	1.21	1.37	1.54	1.74	1.96	2.22	2.52
35 (1.67)	TCG	23.40	22.10	20.80	19.60	18.30	17.10	15.80	14.40
	SDT	71.10	80.60	90.00	99.50	108.90	118.20	127.50	136.90
	KW	1.06	1.21	1.37	1.54	1.74	1.96	2.22	2.52
40 (4.44)	TCG	25.60	24.20	22.90	21.50	20.20	18.80	17.40	15.90
	SDT	72.40	81.80	91.20	100.60	109.80	119.10	128.40	137.70
	KW	1.06	1.21	1.37	1.55	1.74	1.97	2.22	2.53
45 (7.22)	TCG	28.00	26.50	25.10	23.60	22.10	20.60	19.00	17.40
	SDT	73.80	83.20	92.40	101.70	110.90	120.20	129.40	138.60
	KW	1.07	1.22	1.37	1.55	1.74	1.97	2.23	2.53
50 (10.0)	TCG	30.50	28.90	27.30	25.80	24.10	22.50	20.80	19.00
	SDT	75.20	84.40	93.70	102.90	112.10	121.20	130.40	139.60
	KW	1.07	1.22	1.37	1.55	1.74	1.97	2.23	2.53
55 (12.78)	TCG	33.20	31.50	29.80	28.00	26.20	24.40	22.60	20.70
	SDT	76.70	85.80	95.00	104.20	113.30	122.40	131.50	140.60
	KW	1.07	1.22	1.38	1.55	1.75	1.97	2.23	2.53
R4A430(A,G)KB									
30 (-1.11)	TCG	24.90	23.60	22.30	21.00	19.60	18.30	16.80	15.20
	SDT	68.80	78.20	87.70	97.20	106.60	116.00	125.40	134.80
	KW	1.22	1.39	1.56	1.74	1.95	2.19	2.47	2.80
35 (1.67)	TCG	27.40	26.00	24.60	23.20	21.70	20.20	18.60	16.90
	SDT	70.00	79.40	88.80	98.10	107.50	116.90	126.20	135.50
	KW	1.23	1.39	1.56	1.75	1.96	2.20	2.48	2.81
40 (4.44)	TCG	30.10	28.60	27.00	25.50	23.90	22.20	20.50	18.70
	SDT	71.30	80.60	89.90	99.20	108.50	117.80	127.10	136.40
	KW	1.24	1.40	1.57	1.76	1.97	2.21	2.49	2.82
45 (7.22)	TCG	33.10	31.40	29.70	28.00	26.30	24.50	22.60	20.60
	SDT	72.70	81.90	91.10	100.40	109.60	118.90	128.10	137.30
	KW	1.24	1.40	1.57	1.76	1.97	2.22	2.50	2.83
50 (10.0)	TCG	36.20	34.40	32.50	30.70	28.80	26.80	24.80	22.60
	SDT	74.20	83.20	92.40	101.60	110.80	120.00	129.10	138.20
	KW	1.25	1.41	1.58	1.77	1.98	2.22	2.51	2.84
55 (12.78)	TCG	39.60	37.60	35.60	33.50	31.50	29.30	27.10	24.80
	SDT	75.70	84.70	93.80	102.90	112.00	121.10	130.20	139.20
	KW	1.25	1.41	1.58	1.77	1.98	2.23	2.52	2.85
R4A436(A,G)KB									
30 (-1.11)	TCG	26.10	27.90	27.70	26.40	24.50	22.40	20.20	18.30
	SDT	67.10	78.20	88.40	98.00	107.30	116.50	125.70	135.10
	KW	1.34	1.73	2.00	2.24	2.48	2.75	3.08	3.51
35 (1.67)	TCG	29.80	31.20	30.80	29.30	27.20	24.90	22.60	20.50
	SDT	68.60	79.50	89.50	98.90	108.10	117.30	126.50	135.80
	KW	1.33	1.71	1.99	2.23	2.47	2.74	3.07	3.51
40 (4.44)	TCG	33.60	34.60	33.90	32.20	30.00	27.50	25.10	22.80
	SDT	70.00	80.80	90.50	99.80	109.10	118.20	127.30	136.60
	KW	1.31	1.69	1.97	2.21	2.46	2.73	3.07	3.50
45 (7.22)	TCG	37.30	38.00	37.10	35.20	32.70	30.10	27.50	25.10
	SDT	71.40	81.80	91.50	100.80	110.00	119.00	128.10	137.30
	KW	1.30	1.67	1.95	2.20	2.45	2.73	3.07	3.50
50 (10.0)	TCG	41.00	41.30	40.10	38.00	35.40	32.60	29.80	27.30
	SDT	72.60	82.80	92.40	101.70	110.80	119.80	128.90	138.00
	KW	1.28	1.65	1.94	2.19	2.45	2.74	3.08	3.51
55 (12.78)	TCG	44.50	44.50	43.00	40.70	37.90	34.90	32.00	29.20
	SDT	73.70	83.80	93.40	102.60	111.70	120.60	129.60	138.70
	KW	1.26	1.64	1.94	2.20	2.46	2.75	3.09	3.53

See notes on page 11

CONDENSER ONLY RATINGS CONTINUED

SST °F (°C)		CONDENSER ENTERING AIR TEMPERATURES °F (°C)							
		55 (12.78)	65 (18.33)	75 (23.89)	85 (29.44)	95 (35.0)	105 (40.56)	115 (46.11)	125 (51.67)
R4A442(A,G)KB									
30 (-1.11)	TCG	33.60	32.00	30.40	28.70	26.90	25.00	23.10	21.00
	SDT	67.80	77.30	86.90	96.50	106.00	115.50	125.00	134.40
	KW	1.73	1.92	2.14	2.39	2.66	2.97	3.31	3.70
35 (1.67)	TCG	37.10	35.30	33.50	31.60	29.70	27.60	25.50	23.30
	SDT	69.00	78.50	88.00	97.50	107.00	116.40	125.70	135.10
	KW	1.73	1.93	2.15	2.40	2.67	2.98	3.33	3.71
40 (4.44)	TCG	40.80	38.90	36.90	34.80	32.70	30.50	28.10	25.70
	SDT	70.20	79.70	89.10	98.60	108.00	117.30	126.50	135.80
	KW	1.74	1.94	2.16	2.41	2.68	2.99	3.34	3.73
45 (7.22)	TCG	44.90	42.70	40.50	38.20	35.90	33.50	31.00	28.30
	SDT	71.60	80.90	90.30	99.60	108.90	118.20	127.40	136.60
	KW	1.74	1.94	2.17	2.41	2.69	3.00	3.35	3.74
50 (10.0)	TCG	49.30	46.90	44.40	42.00	39.40	36.70	34.00	31.10
	SDT	73.00	82.30	91.50	100.70	110.00	119.20	128.30	137.50
	KW	1.75	1.95	2.17	2.42	2.70	3.01	3.36	3.76
55 (12.78)	TCG	54.00	51.40	48.70	45.90	43.10	40.20	37.20	34.10
	SDT	74.50	83.60	92.80	101.90	111.10	120.20	129.30	138.40
	KW	1.75	1.95	2.17	2.42	2.71	3.02	3.38	3.77
R4A448(A,G)KB									
30 (-1.11)	TCG	40.80	38.00	35.60	33.50	31.40	29.10	26.60	23.70
	SDT	69.00	78.10	87.30	96.60	106.00	115.30	124.50	133.70
	KW	2.01	2.38	2.69	2.97	3.28	3.65	4.13	4.75
35 (1.67)	TCG	44.70	41.80	39.30	37.10	34.80	32.30	29.50	26.40
	SDT	70.30	79.30	88.50	97.70	107.00	116.30	125.40	134.60
	KW	1.99	2.37	2.69	2.99	3.30	3.67	4.14	4.75
40 (4.44)	TCG	48.90	45.90	43.30	40.90	38.40	35.70	32.60	29.20
	SDT	71.70	80.60	89.80	99.00	108.20	117.30	126.50	135.50
	KW	1.97	2.36	2.69	3.00	3.32	3.69	4.16	4.76
45 (7.22)	TCG	53.30	50.30	47.60	45.00	42.20	39.30	35.90	32.20
	SDT	73.10	82.10	91.10	100.30	109.40	118.50	127.50	136.40
	KW	1.94	2.35	2.69	3.01	3.34	3.71	4.18	4.76
50 (10.0)	TCG	58.10	55.00	52.10	49.30	46.30	43.10	39.40	35.30
	SDT	74.70	83.60	92.60	101.70	110.70	119.70	128.60	137.40
	KW	1.90	2.32	2.68	3.01	3.35	3.73	4.19	4.77
55 (12.78)	TCG	63.30	60.00	57.00	53.90	50.60	47.00	43.00	38.60
	SDT	76.40	85.20	94.20	103.20	112.20	121.00	129.80	138.40
	KW	1.86	2.30	2.67	3.01	3.36	3.74	4.20	4.77
R4A460(A,G)KB									
30 (-1.11)	TCG	26.10	27.90	27.70	26.40	24.50	22.40	20.20	18.30
	SDT	67.10	78.20	88.40	98.00	107.30	116.50	125.70	135.10
	KW	1.34	1.73	2.00	2.24	2.48	2.75	3.08	3.51
35 (1.67)	TCG	29.80	31.20	30.80	29.30	27.20	24.90	22.60	20.50
	SDT	68.60	79.50	89.50	98.90	108.10	117.30	126.50	135.80
	KW	1.33	1.71	1.99	2.23	2.47	2.74	3.07	3.51
40 (4.44)	TCG	33.60	34.60	33.90	32.20	30.00	27.50	25.10	22.80
	SDT	70.00	80.80	90.50	99.80	109.10	118.20	127.30	136.60
	KW	1.31	1.69	1.97	2.21	2.46	2.73	3.07	3.50
45 (7.22)	TCG	37.30	38.00	37.10	35.20	32.70	30.10	27.50	25.10
	SDT	71.40	81.80	91.50	100.80	110.00	119.00	128.10	137.30
	KW	1.30	1.67	1.95	2.20	2.45	2.73	3.07	3.50
50 (10.0)	TCG	41.00	41.30	40.10	38.00	35.40	32.60	29.80	27.30
	SDT	72.60	82.80	92.40	101.70	110.80	119.80	128.90	138.00
	KW	1.28	1.65	1.94	2.19	2.45	2.74	3.08	3.51
55 (12.78)	TCG	44.50	44.50	43.00	40.70	37.90	34.90	32.00	29.20
	SDT	73.70	83.80	93.40	102.60	111.70	120.60	129.60	138.70
	KW	1.26	1.64	1.94	2.20	2.46	2.75	3.09	3.53

* AHRI listing applies only to systems shown in Combination Ratings table.

KW - Outdoor Unit Kilowatts Only.

SDT - Saturated Temperature Leaving Compressor (°F)

SST - Saturated Temperature Entering Compressor (°F/°C)

TCG - Gross Cooling Capacity (1000 Btuh)

ACCESSORY USAGE GUIDELINES

ACCESSORY	REQUIRED FOR LOW- AMBIENT COOLING APPLICATIONS (Below 55°F/12.8°C)	REQUIRED FOR LONG LINE APPLICATIONS* (Over 80 ft./24.38 m)	REQUIRED FOR SEA COAST APPLICATIONS (Within 2 miles/ 3.22 km)
Compressor Start Assist Capacitor and Relay	Yes	Yes	No
Crankcase Heater	Yes	Yes	No
Evaporator Freeze Thermostat	Yes	No	No
Hard Shut- Off TXV	Yes	Yes	Yes
Liquid Line Solenoid Valve	No	No	No
Low- ambient Pressure Switch	Yes	No	No
Support Feet	Recommended	No	Recommended
Winter Start Control	Yes**	No	No

* For tubing line sets between 80 and 200 ft. (24.38 and 60.96 m) and/or 20 ft. (6.09 m) vertical differential, refer to Residential Split- System Longline Application Guideline.

** Can only be installed in conjunction with Low Pressure Switch.

ACCESSORIES

Accessory Kit Number	Description	18	24	30	36	42	48	60
NASA001CH	Crankcase Heater for Scroll Compressor					X	X	X
NASA003CH	Crankcase Heater for Scroll Compressor	X	X	X	X			
NASA001SC	Start Component - PTC Device	X	X	X	X	X	X	X
NASA00201FS	Evaporator Freeze Thermostat	X	X	X	X	X	X	X
NASA404PS	High Pressure Switch	X	X	X	X	X	X	X
NASA403PS	Low Pressure Switch, AC, R- 410A	X	X	X	X	X	X	X
NASA401LS	Liquid Line Solenoid Valve, R- 410A	X	X	X	X	X	X	X
NASA001TD	Time Delay Relay, Indoor Blower	X	X	X	X	X	X	X
NASA00201WS	Winter Start Control	X	X	X	X	X	X	X
NASA001AC	Anti- Cycle Timer (5 minute delay)	X	X	X	X	X	X	X
NASA404PS	High Pressure Switch, AC or HP, R- 410A	X	X	X	X	X	X	X
NASA401LA	Low Ambient Kit (Pressure Switch), R- 410A	X	X	X	X	X	X	X
NASA001SJ	Sound Jacket, Compressor					X	X	
NASA002SJ	Sound Jacket, Compressor	X	X	X				
NASA003SJ	Sound Jacket, Compressor							X
NASA00201SF	Support Feet, 4” (102mm) tall (5 blocks)	X	X	X	X	X	X	X
NAEA40501TX	TXV Kit for use with copper or tin fan coils	X	X	X				
NAEA40601TX	TXV Kit for use with copper or tin fan coils				X	X		
NAEA40701TX	TXV Kit for use with copper or tin fan coils						X	
NAEB40501TX	TXV Kit for use with aluminum fan coils	X	X	X				
NAEB40601TX	TXV Kit for use with aluminum fan coils				X	X		
NAEB40701TX	TXV Kit for use with aluminum fan coils						X	

Copyright 2017 International Comfort Products
Lewisburg, Tennessee 37091 USA
Specifications subject to change without notice.