Publication No. RU-RLX-0918B
Replaces RU-RLX-0918A and all previous versions

Next-Gen All-Temp

LOW PROFILE UNIT COOLER

Small to Medium Walk-Ins
Cooler and Freezer Applications

Air Defrost
4,100 to 45,900 BTUH

Electric Defrost
2,700 to 33,000 BTUH

Hot Gas Defrost
2,700 to 33,000 BTUH

NEXT-GEN ALL-TEMP

Features

Russell All-Temps were the original low profile unit coolers with the air draw-through design that established the industry standard as being the all-purpose model for walk-in coolers, freezers and other applications. We've taken these unit coolers to the next level with the release of the Next-Gen All-Temp models. The units feature a new fan guard design and deep draw venturi to achieve optimal airflow and easy access for serviceability. These models can be used with multiple refrigerants, and are available in air, electric and hot gas defrost configurations.

SIZES

There are a wide array of sizes available with capacities ranging from 2,700 to 45,900 BTUH at a 10° TD. One through six fan models are available with air flow spanning a range of 800 to 4,650 CFM.

HOUSING

The embossed aluminum casing is lightweight yet durable. Each fan section is baffled to prevent short cycling of the discharge air. The units are designed to mount flush to the ceiling and are compliant with NSF requirements. The top pan includes 1/2" wide slotted mounting points to simplify installation. The removable drain fitting is installed into the bottom of the drain pan for easy field connection and it can be quickly replaced without changing out the entire drain pan. End panels can be slid out from the front of the unit providing easy serviceability from the front or side of the unit, allowing convenient access to the roomy electrical and piping compartments.

COIL

Copper hairpins consist of high efficiency 3/8" enhanced copper tubes which are staggered and mechanically expanded into corrugated aluminum fins achieving maximum heat transfer while reducing refrigerant charge. Die formed fin collars provide even fin spacing. Models are available in 4 and 6 fins per inch. Sweat connections are standard on all models.

MOTORS

Standard models feature highly efficient Electronically Commutated (EC) motors that can be field or factory wired for dual speed operation. Dual Speed EC motors are available for 115V or 208/230V and are compliant with California Title 24 regulations. PSC motors are also available for 115V, 208/230V or 460V requirements. All motors include thermal overload protection.

CONFIGURATIONS

Units are available as fully configurable (no mounted accessories) or they can be pre-assembled with the most requested options pre-installed at the factory.

Pre-assembly Code[1]:

- Blank = Configurable (no factory installed options)
- E = EcoNet® Control Package with EEV
- T = Factory mounted mechanical TXV
- L = Factory mounted mechanical TXV, Liquid Line Solenoid and mechanical T-Stat
- M = Master Configuration with mounted mechanical TXV, mechanical T-Stat, LLS and copper Tee

FANS

Heavy duty 12" aluminum fans are balanced to provide vibration-free operation. Improved black plastic fan guard design and deep draw venturi achieve optimal air pattern.

ELECTRICAL

Available for 115V, 115-230V (Air Defrost EC motor only), 208/230V and 460V (see pages 5 through 9). A large electrical compartment is supplied internal to the unit to house the electrical components and is easily accessible by removing the slide out end panel. All models are UL and cUL listed and are available for 60 Hz or 50 Hz applications.

AIR DEFROST

Air Defrost models (RL6A) are designed for use in coolers 35°F and warmer. All components are factory wired to convenient screw-type terminal strips.

ELECTRIC DEFROST

Electric Defrost models (RL*E) are designed for use in coolers and freezers between 34°F to -20°F. Defrost heaters are mounted on the air intake side of the unit for optimal performance and easy maintenance. A lower heater is installed inside the drain pan for fast, reliable drainage. A defrost termination fan delay thermostat (DTFD) terminates the defrost cycle when the temperature is satisfied. The fan delay allows the warm coil to cool after a defrost cycle prior to the fans turning on. A heater safety thermostat is installed to prevent overheating.

HOT GAS DEFROST

There are two types of Hot Gas Defrost models available: 3-pipe Hot Gas models (RL*H) and 2-pipe Hot Gas Reverse Cycle units (RL*G) (see pages 10 through 11 for more details). Hot Gas Defrost models are designed for use in coolers and freezers between 34°F and -20°F. All Hot Gas units include a fixed DTFD factory wired and an electric drain pan heater.

Optional Features

- EcoNet® Enabled Controller factory-installed
- EcoNet® Command Center (shipped loose)
- Coated fin pack[2] (Russproof, ElectroFin, Bronz-Glow, or Heresite)
- Coated housing (same coatings as above)
- Adjustable termination/ fan delay control[3]
- Insulated drain pan[3]

Notes

* Asterisk represents a variable character based on fins per inch. See page 4 for nomenclature.

1. Codes T, L and M are intended for units in finished goods inventory only. Call out each required option separately for units ordered for normal lead time delivery.
2. Option available for all models.
3. Option available for electric and hot gas defrost models.

LOW PROFILE UNIT COOLER

Highlighted Features and Options

FANS AND HOUSING

- 12″ heavy duty aluminum fans are balanced for vibration-free operation
- High efficiency fan guard design and deep draw venturi provide optimal air flow
- Mounts flush to ceiling
- Slide out end panels
- NSF approved

COILS AND DEFROST HEATERS

- Available in 4 or 6 fins per inch (FPI)
- Electric defrost heaters are mounted on the air intake coil face to provide optimal performance and easy service access
- The drain pan heater is affixed to the drain pan and is easily removable for service or cleaning

ECONET ENABLED UNIT COOLERS (Optional)

- Developed in conjunction with Rheem Manufacturing specifically for walk-in coolers and freezers — it builds on the reliability and efficiency of Rheem's EcoNet technology
- Saves energy in refrigeration systems through precise superheat and space temperature control, fan cycling, and controlling how often the system goes into defrost based on compressor runtime
  - Eliminates unnecessary defrosts
  - Maximizes energy efficiency with less compressor runtime
  - Reduces fan speed to 50% during off cycle for energy savings
- Can be used with a condensing unit in single and multiple evaporator installations as a group
- Optional **EcoNet Command Center** with intuitive graphical interface controls up to 32 devices (including the Command Center) through one display, provides continuous communication between system components, and the remote mount display allows for EcoNet Enabled Unit Coolers to be programmed, monitored and troubleshot outside of the space being cooled

ELECTRICAL AND PIPING

Unit shown with optional components installed

- End panels slide out for easy service from the front or sides of the unit
- Ample room in electrical and piping compartments for easy access

NEXT-GEN ALL-TEMP

Electronically commutated motors bring energy efficiency to the refrigeration Unit Cooler market. Features of the EC motors we offer include:

- Integrated control with sealed construction
- Locked rotor and overload protection
- Durable ball bearing construction for long commercial life
- Unique Hall Effect Sensor design prevents syncing or resonance
- Threaded shaft uses hubless fan blade
- Motors can be configured for single or dual speed operation
- Dual voltage motor internal power supply operates at correct rpm from 115-230 VAC

Energy Savings by Switching from PSC to Efficient EC Motor

Chart is based on Energy Cost of $0.10 per kWh.

Motor Change	Std Motor Power Watts/ Mtr	Change to Motor Power Watts/Mtr	Reduced Power Watts/ Mtr	Run Time Hrs/ Day	Motor Energy Savings kWh/Yr	Motor Energy Savings $/Yr	Reduced Box Load MBTU/Yr	Cond. Unit Energy Savings $/Yr	Yearly Saving $ Per MTR	Pay back in Yrs
PSC to EC	85	47	38	22	305	31	1041	20	51	2.0

Subtract 6% from total savings for medium temperature air defrost units that run 24 hours per day.
PSC = 1/20 HP PSC motor
EC = 50 Watt Electronically Commutated motor

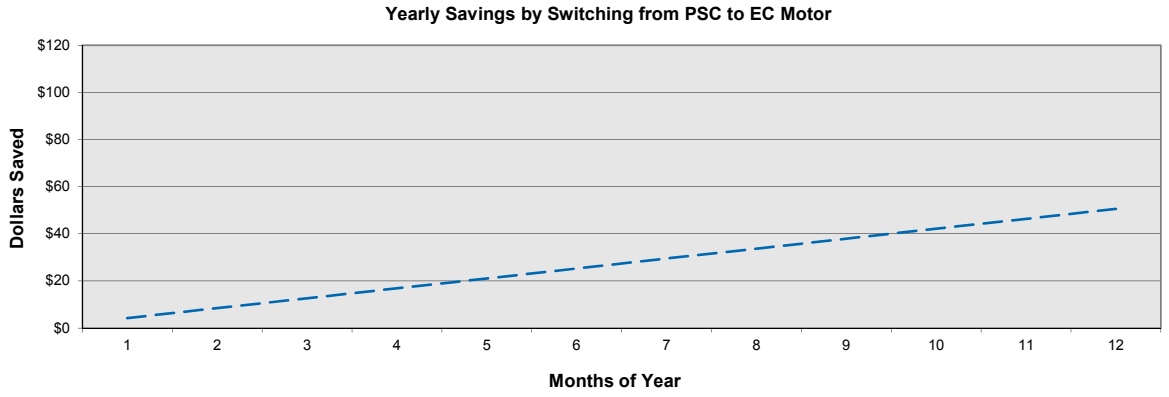

MODEL NUMBER NOMENCLATURE

R L 6 E 042 D E A B L

Russell

Model Type*
L = Low Profile - Std. Connections
U = Low Profile - Opposite End Conn.

Fins Per Inch
4 FPI
6 FPI

Type of Defrost
A = Air Defrost
E = Electric Defrost
H = Hot Gas 3 Pipe
G = Hot Gas Rev. Cycle 2 Pipe

BTUH in Hundreds

Voltage Code
A = 115/1/60
D = 208-230/1/60
E = 208-230/3/60
F = 460/1/60
L = 100/1/50
M = 200-220/1/50
N = 200-220/3/50
P = 380/1/50
S = 115-230/1/50-60 (Air Defrost EC motor only)

Motor Type
E = Single Speed ECM
D = Dual Speed ECM
P = PSC

Revision Code

Refrigerant Type
A = R404A
B = R407A
C = R407C
D = R407F
E = R448A, R449A/B
F = CO_2 DX
G = Glycol* (Consult Factory)
R = EcoNet approved refrigerants
S = R407A, R448A, R449A/B

* More information can be found in the Glycol Unit Coolers publication, RU-GLY, on our Website.

Pre-assembly Code
Blank = Configurable (No factory installed options)
E = EcoNet® Control Package with EEV
T = Mounted TXV only
L = Mounted TXV, LLS, T-Stat
M = Master Configuration with TXV, LLS, T-Stat, Copper Tube

See features page for configuration descriptions

*** NOTE**: Refrigerant and electrical connection locations have been changed for the Next-Gen All-Temp design. Standard connections ("L") are now opposite of the legacy All-Temp models. Mirror image connections ("U" - same end as legacy All-Temp models) are available only as built-to-order base units with no installed options. Refer to the drawing on the back cover for more detail.

LOW PROFILE UNIT COOLER

Performance and Electrical Data - Air Defrost Models - 6 FPI

Model Number	BTUH Capacity @ 25°F S.T. & 10°F TD		CFM	No. of Fans	Total Fan Motor AMPS - 1 Phase					MCA	MOPD
					EC Motors†		PSC Motors				
	R404A/ CO_2 DX	R407A/ R448A/ R449A/B^			115V	208-230V	115V	208-230V	460V	115V/ 208-230V/ 460V	115V/ 208-230V/ 460V
RL6A041***	4,100	4,800	800	1	0.8	0.5	1.0	0.5	0.4	15.0	20
RL6A052***	5,200	6,000	785	1	0.8	0.5	1.0	0.5	0.4		
RL6A066***	6,600	7,800	775	1	0.8	0.5	1.0	0.5	0.4		
RL6A073***	7,300	8,500	1,600	2	1.6	1.0	2.0	1.0	0.8	15.0	20
RL6A094***	9,400	10,900	1,570	2	1.6	1.0	2.0	1.0	0.8		
RL6A117***	11,700	13,600	1,550	2	1.6	1.0	2.0	1.0	0.8		
RL6A130***	13,000	15,300	1,550	2	1.6	1.0	2.0	1.0	0.8	15.0	20
RL6A141***	14,100	16,300	2,355	3	2.4	1.5	3.0	1.5	1.2		
RL6A161***	16,100	18,800	2,355	3	2.4	1.5	3.0	1.5	1.2		
RL6A181***	18,100	21,200	2,325	3	2.4	1.5	3.0	1.5	1.2	15.0	20
RL6A195***	19,500	22,500	3,140	4	3.2	2.0	4.0	2.0	1.6		
RL6A235***	23,500	27,800	3,140	4	3.2	2.0	4.0	2.0	1.6		
RL6A260***	26,000	30,400	3,100	4	3.2	2.0	4.0	2.0	1.6	15.0	20
RL6A295***	29,500	36,100	3,875	5	4.0	2.5	5.0	2.5	2.0		
RL6A330***	33,000	38,800	4,650	6	4.8	3.0	6.0	3.0	2.4		
RL6A390***	39,000	45,900	4,650	6	4.8	3.0	6.0	3.0	2.4		

Use EC motors for 50 Hz operation.

* Each asterisk represents a variable character based on voltage, motor and vintage ordered. See page 4 for nomenclature.

^ Refrigerants with large glides are rated at dew point temperature. Use R407A capacity ratings for R407C and R407F.

† These Electronically Commutated (EC) Motors are not available for 460V. EC Motors can be field or factory wired for dual-speed operation. Dual-speed EC motors are compliant with California Title 24 regulations.

Energy Independence and Security Act of 2007 specifies that walk-in coolers and freezers under 3,000 square feet that are manufactured after January 1, 2009 shall have evaporators with EC motors when they are single phase, less than 460 volt and less than 1 HP.

Mounts flush to the ceiling to maximize storage space

UL certified for use with multiple refrigerants

Single fan through six fan models are available

NEXT-GEN ALL-TEMP

Performance and Electrical Data - Electric Defrost Models - 6 FPI

Model Number	BTUH Capacity @ -20°F S.T. & 10°F TD[1]		CFM	No. of Fans	Total Fan Motor AMPS - 1 Phase			MCA	MOPD
					EC Motors†	PSC Motors			
	R404A / CO_2 DX	R407A/ R448A/ R449A/B^			230V	230V	460V	230V/ 460V	230V/ 460V
RL6E035***	3,500	4,000	800	1	0.5	0.5	0.4	15.0	20
RL6E042***	4,200	4,900	785	1	0.5	0.5	0.4		
RL6E049***	4,900	5,600	775	1	0.5	0.5	0.4		
RL6E066***	6,600	7,600	1,600	2	1.0	1.0	0.8	15.0	20
RL6E077***	7,700	8,800	1,570	2	1.0	1.0	0.8		
RL6E090***	9,000	10,600	1,550	2	1.0	1.0	0.8		
RL6E105***	10,500	12,400	1,550	2	1.0	1.0	0.8	15.0	20
RL6E121***	12,100	14,200	2,355	3	1.5	1.5	1.2		
RL6E142***	14,200	16,600	2,325	3	1.5	1.5	1.2		
RL6E162***	16,200	18,700	3,140	4	2.0	2.0	1.6	15.0	20
RL6E182***	18,200	21,000	3,100	4	2.0	2.0	1.6		
RL6E200***	20,000	22,800	3,925	5	2.5	2.5	2.0		
RL6E244***	24,400	27,900	4,710	6	3.0	3.0	2.4	15.0	20
RL6E281***	28,100	33,000	4,650	6	3.0	3.0	2.4		

Model Number	Heater Amps			Heater Watts
	230V		460V	
	1PH	3PH	1PH	
RL6E035***	4.9	–	2.5	1,125
RL6E042***	4.9	–	2.5	1,125
RL6E049***	4.9	–	2.5	1,125
RL6E066***	9.8	–	4.9	2,250
RL6E077***	9.8	–	4.9	2,250
RL6E090***	9.8	–	4.9	2,250
RL6E105***	9.8	–	4.9	2,250
RL6E121***	14.3	–	7.2	3,300
RL6E142***	14.3	–	7.2	3,300
RL6E162***	19.2	–	9.6	4,425
RL6E182***	19.2	–	9.6	4,425
RL6E200***	24.1	14.0	12.0	5,550
RL6E244***	29.0	16.8	14.5	6,675
RL6E281***	29.0	16.8	14.5	6,675

[1] Capacity Correction for Electric and Hot Gas Defrost Evaporators					
S.S.T. (dew)	20°F	0°F	-10°F	-20°F	-30°F
Multiply Capacity by:	1.15	1.075	1.0375	1	0.9625

Use EC motors for 50 Hz operation.

– Not available.

* Each asterisk represents a variable character based on voltage, motor and vintage ordered. See page 4 for nomenclature.

^ Refrigerants with large glides are rated at dew point temperature. Use R407A capacity ratings for R407C and R407F.

† These Electronically Commutated (EC) Motors are not available for 460V. EC Motors can be field or factory wired for dual-speed operation. Dual-speed EC motors are compliant with California Title 24 regulations.

Energy Independence and Security Act of 2007 specifies that walk-in coolers and freezers under 3,000 square feet that are manufactured after January 1, 2009 shall have evaporators with EC motors when they are single phase, less than 460 volt and less than 1 HP.

LOW PROFILE UNIT COOLER

Performance and Electrical Data - Electric Defrost Models - 4 FPI

Model Number	BTUH Capacity @ -20°F S.T. & 10°F TD[1]		CFM	No. of Fans	Total Fan Motor AMPS - 1 Phase			MCA	MOPD
					EC Motors†	PSC Motors			
	R404A / CO_2 DX	R407A/ R448A/ R449A/B^			230V	230V	460V	230V/ 460V	230V/ 460V
RL4E027***	2,700	3,100	800	1	0.5	0.5	0.4	15.0	20
RL4E032***	3,200	3,800	785	1	0.5	0.5	0.4		
RL4E038***	3,800	4,400	775	1	0.5	0.5	0.4		
RL4E051***	5,100	5,900	1,600	2	1.0	1.0	0.8	15.0	20
RL4E064***	6,400	7,300	1,570	2	1.0	1.0	0.8		
RL4E080***	8,000	9,500	1,550	2	1.0	1.0	0.8		
RL4E094***	9,400	11,000	2,355	3	1.5	1.5	1.2	15.0	20
RL4E110***	11,000	12,800	2,325	3	1.5	1.5	1.2		
RL4E125***	12,500	14,400	3,140	4	2.0	2.0	1.6		
RL4E141***	14,100	16,300	3,100	4	2.0	2.0	1.6	15.0	20
RL4E155***	15,500	17,700	3,925	5	2.5	2.5	2.0		
RL4E195***	19,500	22,300	4,710	6	3.0	3.0	2.4		
RL4E230***	23,000	27,000	4,650	6	3.0	3.0	2.4		

Model Number	Heater Amps			Heater Watts
	230V		460V	
	1PH	3PH	1PH	
RL4E027***	4.9	–	2.5	1,125
RL4E032***	4.9	–	2.5	1,125
RL4E038***	4.9	–	2.5	1,125
RL4E051***	9.8	–	4.9	2,250
RL4E064***	9.8	–	4.9	2,250
RL4E080***	9.8	–	4.9	2,250
RL4E094***	14.3	–	7.2	3,300
RL4E110***	14.3	–	7.2	3,300
RL4E125***	19.2	–	9.6	4,425
RL4E141***	19.2	–	9.6	4,425
RL4E155***	24.1	14.0	12.0	5,550
RL4E195***	29.0	16.8	14.5	6,675
RL4E230***	29.0	16.8	14.5	6,675

[1] Capacity Correction for Electric and Hot Gas Defrost Evaporators					
S.S.T. (dew)	20°F	0°F	-10°F	-20°F	-30°F
Multiply Capacity by:	1.15	1.075	1.0375	1	0.9625

Use EC motors for 50 Hz operation.

– Not available.

* Each asterisk represents a variable character based on voltage, motor and vintage ordered. See page 4 for nomenclature.

^ Refrigerants with large glides are rated at dew point temperature. Use R407A capacity ratings for R407C and R407F.

† These Electronically Commutated (EC) Motors are not available for 460V. EC Motors can be field or factory wired for dual-speed operation. Dual-speed EC motors are compliant with California Title 24 regulations.

Energy Independence and Security Act of 2007 specifies that walk-in coolers and freezers under 3,000 square feet that are manufactured after January 1, 2009 shall have evaporators with EC motors when they are single phase, less than 460 volt and less than 1 HP.

NEXT-GEN ALL-TEMP

Electric Defrost Kits

MODEL NUMBER	1 UNIT COOLER PER SYSTEM			2 UNIT COOLERS PER SYSTEM			3 UNIT COOLERS PER SYSTEM		
	230V/1	230V/3	460V/1	230V/1	230V/3	460V/1	230V/1	230V/3	460V/1
6 FPI									
RL6E035***	ED5-A2	–	ED17-A4	ED20-A2*	–	ED22-A4	ED30-A2	–	ED32-A4
RL6E042***	ED5-A2	–	ED17-A4	ED20-A2*	–	ED22-A4	ED30-A2	–	ED32-A4
RL6E049***	ED5-A2	–	ED17-A4	ED20-A2*	–	ED22-A4	ED30-A2	–	ED32-A4
RL6E066***	ED5-A2	–	ED17-A4	ED20-A2*	–	ED22-A4	ED30-A2	–	ED32-A4
RL6E077***	ED5-A2	–	ED17-A4	ED20-A2*	–	ED22-A4	ED30-A2	–	ED32-A4
RL6E090***	ED5-A2	–	ED17-A4	ED20-A2*	–	ED22-A4	ED30-A2	–	ED32-A4
RL6E105***	ED5-A2	–	ED17-A4	ED20-A2*	–	ED22-A4	ED33-A2	–	ED32-A4
RL6E121***	ED5-A2	–	ED17-A4	ED20-A2*	–	ED22-A4	ED33-A2	–	ED32-A4
RL6E142***	ED5-A2	–	ED17-A4	ED20-A2*	–	ED22-A4	ED33-A2	–	ED32-A4
RL6E162***	ED6-A2	–	ED17-A4	ED23-A2*	–	ED22-A4	ED35-A2	–	ED32-A4
RL6E182***	ED6-A2	–	ED17-A4	ED23-A2*	–	ED22-A4	ED35-A2	–	ED32-A4
RL6E200***	ED7-A2	ED11-B2	ED17-A4	ED23-A2*	ED21-B2*	ED22-A4	ED35-A2	ED33-B2	ED34-A4
RL6E244***	ED7-A2	ED11-B2	ED17-A4	ED25-A2*	ED23-B2*	ED22-A4	ED35-A2	ED35-B2	ED34-A4
RL6E281***	ED7-A2	ED11-B2	ED17-A4	ED25-A2*	ED23-B2*	ED22-A4	ED35-A2	ED35-B2	ED34-A4
4 FPI									
RL4E027***	ED5-A2	–	ED17-A4	ED20-A2*	–	ED22-A4	ED30-A2	–	ED32-A4
RL4E032***	ED5-A2	–	ED17-A4	ED20-A2*	–	ED22-A4	ED30-A2	–	ED32-A4
RL4E038***	ED5-A2	–	ED17-A4	ED20-A2*	–	ED22-A4	ED30-A2	–	ED32-A4
RL4E051***	ED5-A2	–	ED17-A4	ED20-A2*	–	ED22-A4	ED30-A2	–	ED32-A4
RL4E064***	ED5-A2	–	ED17-A4	ED20-A2*	–	ED22-A4	ED30-A2	–	ED32-A4
RL4E080***	ED5-A2	–	ED17-A4	ED20-A2*	–	ED22-A4	ED30-A2	–	ED32-A4
RL4E094***	ED5-A2	–	ED17-A4	ED20-A2*	–	ED22-A4	ED30-A2	–	ED32-A4
RL4E110***	ED5-A2	–	ED17-A4	ED20-A2*	–	ED22-A4	ED33-A2	–	ED32-A4
RL4E125***	ED5-A2	–	ED17-A4	ED20-A2*	–	ED22-A4	ED33-A2	–	ED32-A4
RL4E141***	ED6-A2	–	ED17-A4	ED23-A2*	–	ED22-A4	ED35-A2	–	ED32-A4
RL4E155***	ED6-A2	ED11-B2	ED17-A4	ED23-A2*	ED21-B2*	ED22-A4	ED35-A2	ED33-B2	ED32-A4
RL4E195***	ED7-A2	ED11-B2	ED17-A4	ED23-A2*	ED23-B2*	ED22-A4	ED35-A2	ED35-B2	ED34-A4
RL4E230***	ED7-A2	ED11-B2	ED17-A4	ED23-A2*	ED23-B2*	ED22-A4	ED35-A2	ED35-B2	ED34-A4

* 1/2 through 3 HP condensing units require ED210 or ED213 for systems with 2 evaporators. ED213 is not large enough for use with six-fan evaporators.
– Not available.
See additional notes on page 9.

ELECTRIC DEFROST KIT NOMENCLATURE

E D 1 2 - A 2

- 2 — Defrost Heater Voltage (2 = 208-230V, 4 = 460V)
- A — Defrost Heater Phase (1 or 3)
  - A = 1 Phase Fan Motors, 1 Phase Heaters
  - B = 1 Phase Fan Motors, 3 Phase Heaters
  - C = 3 Phase Fan Motors, 3 Phase Heaters
- 2 — Defrost Kit Identifier
- 1 — Evaporator Quantity (1, 2, or 3 per system)
- E D — Kit Designator

Electric Defrost Kits

KIT NUMBER	TIMER	AUXILIARY SWITCH	BLOCK-OUT RELAY	DEFROST CONTACTOR	FAN CONTACTOR	SEQUENCING RELAY
ED5-230/1	1	–	1-15A	–	–	–
ED6-230/1	1	–	1-20A	–	–	–
ED7-230/1	1	–	1-25A	–	–	–
ED10-230/1	1	–	1-30A	–	–	–
ED11-230/3	1	1	–	1-30A	–	–
ED17-460/1	1	1	–	1-15A	1-15A	–
ED18-460/1	1	1	–	1-20A	1-20A	–
ED12-460/1	1	1	–	1-30A	1-25A	–
[1]ED210-230/1	1	–	1-30A	–	–	–
[1]ED213-230/1	1	1	—	1-50A	–	–
[1]ED213-230/3	1	1	—	1-50A	–	–
ED20-230/1	1	–	1-30A	–	–	2
ED22-460/1	1	1	—	2-15A	1-25A	2
ED23-230/1	1	1	—	2-25A	–	2
ED23-230/3	1	1	—	2-25A	–	2
ED30-230/1	1	–	1-30A	–	–	3
ED32-460/1	1	1	–	3-10A	1-25A	3
ED33-230/1	1	1	–	3-16A	—	3
ED34-460/1	1	1	–	3-16A	1-25A	3
ED35-230/1	1	1	–	3-33A	–	3
ED35-230/3	1	1	–	3-33A	–	3

Electric defrost kits consist of components that are necessary to control the defrost cycle. The kits are available as a factory installed option when ordered with a condensing unit. Not all Ed-Kits are available for all condensing unit models. The contents of each kit is described below, along with the function of each component.

Timer: Initiates the defrost cycle. Also used as a override protection for defrost termination.

Auxiliary Switch: It's mounted on the compressor contactor and prevents the defrost contactor from operating whenever the compressor is energized.

Block-Out Relay: Serves the same function as auxiliary switch. Used when defrost contactor is not required (lower wattage single phase only).

Defrost Contactor: Carries amperage load for heaters.

Fan Contactor: Used with 460V motors or when 230V motors are wired 3 phase.

Sequencing Relays: Provides interconnection of multiple unit coolers on a single system so that each unit cooler is allowed to individually terminate defrost on temperature.

– Not available.

[1] For use with 2 evaporators , 1/2 through 3 HP Next-Gen MiniCon systems ONLY! ED213 is not large enough for use with six-fan evaporators.

Defrost Kit Components

NEXT-GEN ALL-TEMP

Performance and Electrical Data - Hot Gas Defrost Models - 6 FPI

Hot Gas 3-Pipe Model Number	Hot Gas Reverse Cycle 2-Pipe Model Number	BTUH Capacity @ -20°F S.T. & 10°F TD[1]		CFM	No. of Fans	Total Fan Motor AMPS - 1 Phase					MCA	MOPD
						EC Motors†		PSC Motors				
		R404A/ CO_2 DX	R407A/ R448A/ R449A/B^			115V	208-230V	115V	208-230V	460V	115V/ 208-230V/ 460V	115V/ 208-230V/ 460V
RL6H035***	RL6G035***	3,500	4,000	800	1	0.8	0.5	0.8	0.5	0.4	15.0	20
RL6H042***	RL6G042***	4,200	4,900	785	1	0.8	0.5	0.8	0.5	0.4		
RL6H049***	RL6G049***	4,900	5,600	775	1	0.8	0.5	0.8	0.5	0.4		
RL6H066***	RL6G066***	6,600	7,600	1,600	2	1.6	1.0	1.6	1.0	0.8	15.0	20
RL6H077***	RL6G077***	7,700	8,800	1,570	2	1.6	1.0	1.6	1.0	0.8		
RL6H090***	RL6G090***	9,000	10,600	1,550	2	1.6	1.0	1.6	1.0	0.8		
RL6H105***	RL6G105***	10,500	12,400	1,550	2	1.6	1.0	1.6	1.0	0.8	15.0	20
RL6H121***	RL6G121***	12,100	14,200	2,355	3	2.4	1.5	2.4	1.5	1.2		
RL6H142***	RL6G142***	14,200	16,600	2,325	3	2.4	1.5	2.4	1.5	1.2		
RL6H162***	RL6G162***	16,200	18,700	3,140	4	3.2	2.0	3.2	2.0	1.6	15.0	20
RL6H182***	RL6G182***	18,200	21,000	3,100	4	3.2	2.0	3.2	2.0	1.6		
RL6H200***	RL6G200***	20,000	22,800	3,925	5	4.0	2.5	4.0	2.5	2.0		
RL6H244***	RL6G244***	24,400	27,900	4,710	6	4.8	3.0	4.8	3.0	2.4	15.0	20
RL6H281***	RL6G281***	28,100	33,000	4,650	6	4.8	3.0	4.8	3.0	2.4		

Hot Gas 3-Pipe Model Number	Hot Gas Reverse Cycle 2-Pipe Model Number	Drain Pan Heater Amps			Drain Pan Heater Watts
		115V	230V	460V	
		1PH	1PH	1PH	
RL6H035***	RL6G035***	3.1	1.7	0.9	375
RL6H042***	RL6G042***	3.1	1.7	0.9	375
RL6H049***	RL6G049***	3.1	1.7	0.9	375
RL6H066***	RL6G066***	6.3	3.3	1.7	750
RL6H077***	RL6G077***	6.3	3.3	1.7	750
RL6H090***	RL6G090***	6.3	3.3	1.7	750
RL6H105***	RL6G105***	6.3	3.3	1.7	750
RL6H121***	RL6G121***	9.3	4.8	2.4	1,100
RL6H142***	RL6G142***	9.3	4.8	2.4	1,100
RL6H162***	RL6G162***	12.3	6.4	3.2	1,475
RL6H182***	RL6G182***	12.3	6.4	3.2	1,475
RL6H200***	RL6G200***	15.4	8.1	4.0	1,850
RL6H244***	RL6G244***	18.5	9.7	4.9	2,225
RL6H281***	RL6G281***	18.5	9.7	4.9	2,225

Hot Gas 3-Pipe Model

The system uses 3 pipes — 1 for liquid line, 1 for suction line and 1 for hot gas. The hot gas is taken from the discharge line, between the compressor and the condenser, through a hot-gas solenoid valve to the distributor tee then through the coil.

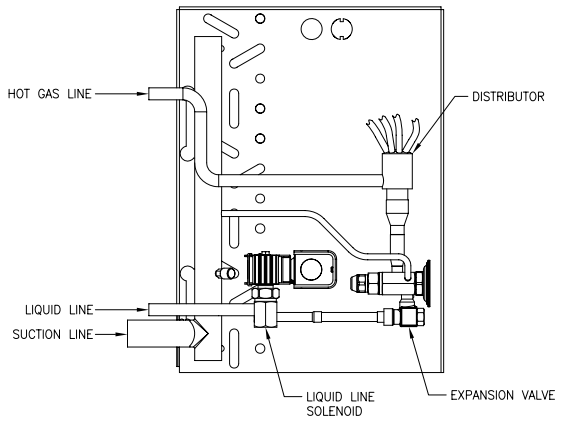

[1] Capacity Correction for Electric and Hot Gas Defrost Evaporators					
S.S.T. (Dew)	20°F	0°F	-10°F	-20°F	-30°F
Multiply Capacity by:	1.15	1.075	1.0375	1	0.9625

Use EC motors for 50 Hz operation.

* Each asterisk represents a variable character based on voltage, motor and vintage ordered. See page 4 for nomenclature.

^ Refrigerants with large glides are rated at dew point temperature. Use R407A capacity ratings for R407C and R407F.

† These Electronically Commutated (EC) Motors are not available for 460V. EC Motors can be field or factory wired for dual-speed operation. Dual-speed EC motors are compliant with California Title 24 regulations.

Energy Independence and Security Act of 2007 specifies that walk-in coolers and freezers under 3,000 square feet that are manufactured after January 1, 2009 shall have evaporators with EC motors when they are single phase, less than 460 volt and less than 1 HP.

LOW PROFILE UNIT COOLER

Performance and Electrical Data - Hot Gas Defrost Models - 4 FPI

Hot Gas 3-Pipe Model Number	Hot Gas Reverse Cycle 2-Pipe Model Number	BTUH Capacity @ -20°F S.T. & 10°F TD[1]		CFM	No. of Fans	Total Fan Motor AMPS - 1 Phase					MCA	MOPD
						EC Motors†		PSC Motors				
		R404A/ CO_2 DX	R407A/ R448A/ R449A/B^			115V	208-230V	115V	208-230V	460V	115V/ 208-230V/ 460V	115V/ 208-230V/ 460V
RL4H027***	RL4G027***	2,700	3,100	800	1	0.8	0.5	0.8	0.5	0.4	15.0	20.0
RL4H032***	RL4G032***	3,200	3,800	785	1	0.8	0.5	0.8	0.5	0.4		
RL4H038***	RL4G038***	3,800	4,400	775	1	0.8	0.5	0.8	0.5	0.4		
RL4H051***	RL4G051***	5,100	5,900	1,600	2	1.6	1.0	1.6	1.0	0.8	15.0	20.0
RL4H064***	RL4G064***	6,400	7,300	1,570	2	1.6	1.0	1.6	1.0	0.8		
RL4H080***	RL4G080***	8,000	9,500	1,550	2	1.6	1.0	1.6	1.0	0.8		
RL4H094***	RL4G094***	9,400	11,000	2,355	3	2.4	1.5	2.4	1.5	1.2	15.0	20.0
RL4H110***	RL4G110***	11,000	12,800	2,325	3	2.4	1.5	2.4	1.5	1.2		
RL4H125***	RL4G125***	12,500	14,400	3,140	4	3.2	2.0	3.2	2.0	1.6		
RL4H141***	RL4G141***	14,100	16,300	3,100	4	3.2	2.0	3.2	2.0	1.6	15.0	20.0
RL4H155***	RL4G155***	15,500	17,700	3,925	5	4.0	2.5	4.0	2.5	2.0		
RL4H195***	RL4G195***	19,500	22,300	4,710	6	4.8	3.0	4.8	3.0	2.4		
RL4H230***	RL4G230***	23,000	27,000	4,650	6	4.8	3.0	4.8	3.0	2.4		

Hot Gas 3-Pipe Model Number	Hot Gas Reverse Cycle 2-Pipe Model Number	Drain Pan Heater Amps			Drain Pan Heater Watts
		115V	230V	460V	
		1PH	1PH	1PH	
RL4H027***	RL4G027***	3.1	1.7	0.9	375
RL4H032***	RL4G032***	3.1	1.7	0.9	375
RL4H038***	RL4G038***	3.1	1.7	0.9	375
RL4H051***	RL4G051***	6.3	3.3	1.7	750
RL4H064***	RL4G064***	6.3	3.3	1.7	750
RL4H080***	RL4G080***	6.3	3.3	1.7	750
RL4H094***	RL4G094***	9.3	4.8	2.4	1,100
RL4H110***	RL4G110***	9.3	4.8	2.4	1,100
RL4H125***	RL4G125***	12.3	6.4	3.2	1,475
RL4H141***	RL4G141***	12.3	6.4	3.2	1,475
RL4H155***	RL4G155***	15.4	8.1	4.0	1,850
RL4H195***	RL4G195***	18.5	9.7	4.9	2,225
RL4H230***	RL4G230***	18.5	9.7	4.9	2,225

Hot Gas Reverse Cycle 2-Pipe Model
A changeover valve is located in the discharge suction line of the compressor, so that when defrost is required, the valve changes over from the normal refrigeration flow so that the discharged gas flows into the suction connection and bypasses TX valve.

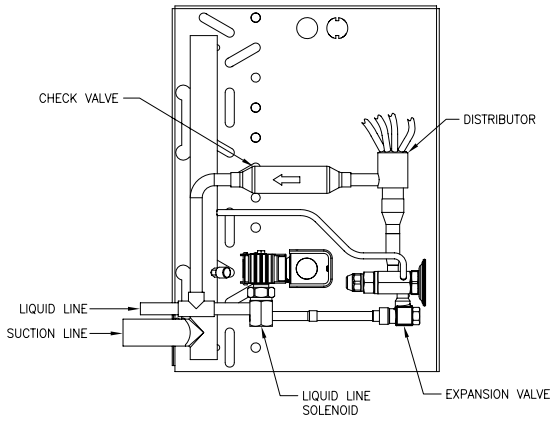

[1] Capacity Correction for Electric and Hot Gas Defrost Evaporators					
S.S.T. (Dew)	20°F	0°F	-10°F	-20°F	-30°F
Multiply Capacity by:	1.15	1.075	1.0375	1	0.9625

Use EC motors for 50 Hz operation.

* Each asterisk represents a variable character based on voltage, motor and vintage ordered. See page 4 for nomenclature.

^ Refrigerants with large glides are rated at dew point temperature. Use R407A capacity ratings for R407C and R407F.

† These Electronically Commutated (EC) Motors are not available for 460V. EC Motors can be field or factory wired for dual-speed operation. Dual-speed EC motors are compliant with California Title 24 regulations.

Energy Independence and Security Act of 2007 specifies that walk-in coolers and freezers under 3,000 square feet that are manufactured after January 1, 2009 shall have evaporators with EC motors when they are single phase, less than 460 volt and less than 1 HP.

NEXT-GEN ALL-TEMP

Distributor Nozzle and Expansion Valves - Air Defrost Models

R404A

	Model Number	Part Numbers						No. of Circuits
		Nozzle @ Liq. Temp.		TXV^ @ Liq. Temp.		EEV @ Liq. Temp.		
		50°F	100°F	50°F	100°F	50°F	100°F	
6 FPI	RL6A041***	–	–	SBFSE-AAA-C	SBFSE-AA-C	SER-AA	SER-AA	1
	RL6A052***	–	–	SBFSE-AA-C	SBFSE-AA-C	SER-AA	SER-A	1
	RL6A066***	L, #1/4	L, #3/4	SBFSE-AA-C	SBFSE-A-C	SER-A	SER-A	2
	RL6A073***	L, #1/4	L, #3/4	SBFSE-AA-C	SBFSE-A-C	SER-A	SER-A	2
	RL6A094***	L, #1/4	L, #1	SBFSE-A-C	SBFSE-A-C	SER-A	SER-B	2
	RL6A117***	L, #1/3	L, #1-1/2	SBFSE-A-C	SBFSE-A-C	SER-A	SER-B	3
	RL6A130***	L, #1/2	L, #1-1/2	SBFSE-A-C	SBFSE-B-C	SER-B	SER-B	3
	RL6A141***	L, #1/2	L, #1-1/2	SBFSE-A-C	SBFSE-B-C	SER-B	SER-B	4
	RL6A161***	L, #1/2	L, #1-1/2	SBFSE-A-C	SBFSE-B-C	SER-B	SER-C	3
	RL6A181***	L, #1/2	L, #2	SBFSE-B-C	SBFSE-B-C	SER-B	SER-C	4
	RL6A195***	L, #3/4	L, #2	SBFSE-B-C	SBFSE-B-C	SER-B	SER-C	4
	RL6A235***	L, #3/4	L, #2-1/2	SBFSE-B-C	SBFSE-C-C	SER-C	SER-C	6
	RL6A260***	L, #3/4	L, #2-1/2	SBFSE-B-C	SBFSE-C-C	SER-C	SER-C	6
	RL6A295***	L, #1	L, #3	SBFSE-B-C	SBFSE-C-C	SER-C	SER-C	8
	RL6A330***	L, #1	L, #4	SBFSE-C-C	EBSSE-6-C	SER-C	SER-C	7
	RL6A390***	L, #1-1/2	L, #4	SBFSE-C-C	EBSSE-6-C	SER-C	SER-C	8

R407A/ R448A/ R449A/B†

6 FPI	RL6A041***	–	–	SBFDE-AA-C	SBFDE-AA-C	SER-AA	SER-AA	1
	RL6A052***	–	–	SBFDE-AA-C	SBFDE-AA-C	SER-AA	SER-AA	1
	RL6A066***	L, #1/4	L, #3/4	SBFDE-AA-C	SBFDE-AA-C	SER-A	SER-A	2
	RL6A073***	L, #1/4	L, #3/4	SBFDE-AA-C	SBFDE-AA-C	SER-A	SER-A	2
	RL6A094***	L, #1/3	L, #1	SBFDE-AA-C	SBFDE-A-C	SER-A	SER-A	2
	RL6A117***	L, #1/2	L, #1-1/2	SBFDE-A-C	SBFDE-A-C	SER-A	SER-B	3
	RL6A130***	L, #1/2	L, #1-1/2	SBFDE-A-C	SBFDE-A-C	SER-B	SER-B	3
	RL6A141***	L, #1/2	L, #1-1/2	SBFDE-A-C	SBFDE-A-C	SER-B	SER-B	4
	RL6A161***	L, #3/4	L, #1-1/2	SBFDE-A-C	SBFDE-B-C	SER-B	SER-B	3
	RL6A181***	L, #3/4	L, #2	SBFDE-A-C	SBFDE-B-C	SER-B	SER-B	4
	RL6A195***	L, #3/4	L, #2	SBFDE-A-C	SBFDE-B-C	SER-B	SER-B	4
	RL6A235***	L, #1	L, #2-1/2	SBFDE-B-C	SBFDE-B-C	SER-B	SER-C	6
	RL6A260***	L, #1	L, #2-1/2	SBFDE-B-C	SBFDE-C-C	SER-C	SER-C	6
	RL6A295***	L, #1-1/2	L, #3	SBFDE-B-C	SBFDE-C-C	SER-C	SER-C	8
	RL6A330***	L, #1-1/2	L, #3	SBFDE-B-C	SBFDE-C-C	SER-C	SER-C	7
	RL6A390***	L, #1-1/2	L, #4	SBFDE-C-C	SBFDE-C-C	SER-C	SER-C	8

Distributor lines are 3/16" diameter and 14" long. Distributor connection size is 1/2" for all air defrost models.

* Each asterisk represents a variable character based on voltage, motor and vintage ordered. See page 4 for nomenclature.

– Single feed circuit coils do not get a distributor/nozzle.

^ TXV selections are based on +25°F suction temp., 8°F to 12°F evaporator TD. Contact factory for operating conditions outside of this range.

† SBFDE expansion valves are compatible with R407A, R448A and R449A/B. For other valves, follow manufacturers selection guidelines.

Base models (no factory-mounted components) include nozzles sized for 100°F liquid shipped loose.

LOW PROFILE UNIT COOLER

Distributor Nozzle and Expansion Valves - Electric Defrost Models

	Model Number	Part Numbers						No. of Circuits
		Nozzle @ Liq. Temp.		TXV^ @ Liq. Temp.		EEV @ Liq. Temp.		
		50°F	100°F	50°F	100°F	50°F	100°F	
R404A								
6 FPI	RL6E035***	–	–	SBFSE-AAA-ZP	SBFSE-AA-ZP	SER-AA	SER-AA	1
	RL6E042***	L, #1/3	L, #3/4	SBFSE-AA-ZP	SBFSE-AA-ZP	SER-AA	SER-AA	2
	RL6E049***	L, #1/2	L, #1	SBFSE-AA-ZP	SBFSE-A-ZP	SER-AA	SER-A	2
	RL6E066***	L, #1/2	L, #1	SBFSE-AA-ZP	SBFSE-A-ZP	SER-A	SER-A	2
	RL6E077***	L,#3/4	L, #1-1/2	SBFSE-A-ZP	SBFSE-A-ZP	SER-A	SER-A	3
	RL6E090***	L,#3/4	L, #1-1/2	SBFSE-A-ZP	SBFSE-A-ZP	SER-A	SER-A	5
	RL6E105***	L,#1	L, #2	SBFSE-A-ZP	SBFSE-B-ZP	SER-A	SER-B	6
	RL6E121***	L, #1	L, #2	SBFSE-A-ZP	SBFSE-B-ZP	SER-B	SER-B	6
	RL6E142***	L,#1-1/2	L, #2-1/2	SBFSE-A-ZP	SBFSE-B-ZP	SER-B	SER-B	6
	RL6E162***	L,#1-1/2	L, #2-1/2	SBFSE-B-ZP	SBFSE-C-ZP	SER-B	SER-B	6
	RL6E182***	L, #1-1/2	L, #3	SBFSE-B-ZP	SBFSE-C-ZP	SER-B	SER-C	6
	RL6E200***	L, #1-1/2	L, #3	SBFSE-B-ZP	SBFSE-C-ZP	SER-B	SER-C	6
	RL6E244***	L, #2	L, #4	SBFSE-C-ZP	EBSSE-6-ZP	SER-C	SER-C	9
	RL6E281***	G, #2-1/2	G, #5	SBFSE-C-ZP	EBSSE-6-ZP	SER-C	SER-C	12
4 FPI	RL4E027***	–	–	SBFSE-AAA-ZP	SBFSE-AA-ZP	SER-AA	SER-AA	1
	RL4E032***	–	–	SBFSE-AA-ZP	SBFSE-AA-ZP	SER-AA	SER-AA	1
	RL4E038***	L, #1/3	L, #3/4	SBFSE-AA-ZP	SBFSE-AA-ZP	SER-AA	SER-AA	2
	RL4E051***	L, #1/2	L, #1	SBFSE-AA-ZP	SBFSE-A-ZP	SER-AA	SER-A	2
	RL4E064***	L, #1/2	L, #1-1/2	SBFSE-AA-ZP	SBFSE-A-ZP	SER-A	SER-A	3
	RL4E080***	L, #3/4	L, #1-1/2	SBFSE-A-ZP	SBFSE-A-ZP	SER-A	SER-A	6
	RL4E094***	L, #3/4	L, #2	SBFSE-A-ZP	SBFSE-A-ZP	SER-A	SER-B	6
	RL4E110***	L, #1	L, #2	SBFSE-A-ZP	SBFSE-B-ZP	SER-A	SER-B	6
	RL4E125***	L, #1	L, #2-1/2	SBFSE-A-ZP	SBFSE-B-ZP	SER-B	SER-B	6
	RL4E141***	L, #1	L, #2-1/2	SBFSE-A-ZP	SBFSE-B-ZP	SER-B	SER-B	6
	RL4E155***	L, #1-1/2	L, #2-1/2	SBFSE-A-ZP	SBFSE-C-ZP	SER-B	SER-B	6
	RL4E195***	L, #2	L, #4	SBFSE-B-ZP	SBFSE-C-ZP	SER-B	SER-C	9
	RL4E230***	G, #2	G, #4	SBFSE-C-ZP	SBFSE-C-ZP	SER-B	SER-C	12
R407A/ R448A/ R449A/B†								
6 FPI	RL6E035***	–	–	SBFDE-AA-ZP	SBFDE-AA-ZP	SER-AA	SER-AA	1
	RL6E042***	L, #1/3	L, #3/4	SBFDE-AA-ZP	SBFDE-AA-ZP	SER-AA	SER-AA	2
	RL6E049***	L, #1/3	L, #3/4	SBFDE-AA-ZP	SBFDE-AA-ZP	SER-AA	SER-AA	2
	RL6E066***	L, #1/2	L, #1	SBFDE-AA-ZP	SBFDE-A-ZP	SER-A	SER-A	2
	RL6E077***	L, #3/4	L, #1	SBFDE-A-ZP	SBFDE-A-ZP	SER-A	SER-A	3
	RL6E090***	L, #3/4	L, #1-1/2	SBFDE-A-ZP	SBFDE-B-ZP	SER-A	SER-A	5
	RL6E105***	L, #1	L, #2	SBFDE-A-ZP	SBFDE-B-ZP	SER-A	SER-B	6
	RL6E121***	L, #1	L, #2	SBFDE-A-ZP	SBFDE-B-ZP	SER-A	SER-B	6
	RL6E142***	L, #1-1/2	L, #2	SBFDE-B-ZP	SBFDE-B-ZP	SER-B	SER-B	6
	RL6E162***	L, #1-1/2	L, #2-1/2	SBFDE-B-ZP	SBFDE-C-ZP	SER-B	SER-B	6
	RL6E182***	L, #1-1/2	L, #2-1/2	SBFDE-B-ZP	SBFDE-C-ZP	SER-B	SER-B	6
	RL6E200***	L, #1-1/2	L, #3	SBFDE-B-ZP	SBFDE-C-ZP	SER-B	SER-B	6
	RL6E244***	L, #2	L, #4	SBFDE-C-ZP	SBFDE-C-ZP	SER-B	SER-C	9
	RL6E281***	G, #2-1/2	G, #4	SBFDE-C-ZP	SBFDE-C-ZP	SER-C	SER-C	12
4 FPI	RL4E027***	–	–	SBFDE-AA-ZP	SBFDE-AA-ZP	SER-AA	SER-AA	1
	RL4E032***	–	–	SBFDE-AA-ZP	SBFDE-AA-ZP	SER-AA	SER-AA	1
	RL4E038***	L, #1/3	L, #3/4	SBFDE-AA-ZP	SBFDE-AA-ZP	SER-AA	SER-AA	2
	RL4E051***	L, #1/2	L, #3/4	SBFDE-AA-ZP	SBFDE-A-ZP	SER-AA	SER-AA	2
	RL4E064***	L, #1/2	L, #1	SBFDE-AA-ZP	SBFDE-A-ZP	SER-A	SER-A	3
	RL4E080***	L, #3/4	L, #1-1/2	SBFDE-A-ZP	SBFDE-A-ZP	SER-A	SER-A	6
	RL4E094***	L, #3/4	L, #1-1/2	SBFDE-A-ZP	SBFDE-B-ZP	SER-A	SER-A	6
	RL4E110***	L, #1	L, #2	SBFDE-A-ZP	SBFDE-B-ZP	SER-A	SER-B	6
	RL4E125***	L, #1	L, #2	SBFDE-A-ZP	SBFDE-B-ZP	SER-A	SER-B	6
	RL4E141***	L, #1	L, #2	SBFDE-B-ZP	SBFDE-B-ZP	SER-B	SER-B	6
	RL4E155***	L, #1-1/2	L, #2-1/2	SBFDE-B-ZP	SBFDE-B-ZP	SER-B	SER-B	6
	RL4E195***	L, #1-1/2	L, #3	SBFDE-B-ZP	SBFDE-C-ZP	SER-B	SER-B	9
	RL4E230***	G, #2	G, #4	SBFDE-B-ZP	SBFDE-C-ZP	SER-B	SER-C	12

Distributor lines are 3/16" diameter and 14" long. Distributor connection size is 1/2" for electric defrost models with "L" nozzle and 7/8" for models with "G" nozzle.

* Each asterisk represents a variable character based on voltage, motor and vintage ordered. See page 4 for nomenclature.

– Single feed circuit coils do not get a distributor/nozzle.

^ TXV selections are based on -20°F suction temp., 8°F to 12°F evaporator TD. Contact factory for operating conditions outside of this range. Do not use pressure limiting TXVs when the condensing unit includes a CPR valve.

† SBFDE expansion valves are compatible with R407A, R448A and R449A/B. For other valves, follow manufacturers selection guidelines.

Base models (no factory-mounted components) include nozzles sized for 100°F liquid shipped loose.

NEXT-GEN ALL-TEMP

Distributor Nozzle and Expansion Valves - Hot Gas Defrost Models

	Hot Gas 3-Pipe Model Number	Hot Gas Reverse Cycle 2-Pipe Model Number	Part Numbers						No. of Circuits
			Nozzle @ Liq. Temp.		TXV^ @ Liq. Temp.		EEV @ Liq. Temp.		
			50°F	100°F	50°F	100°F	50°F	100°F	
R404A									
6 FPI	RL6H035***	RL6G035***	–	–	SBFSE-AAA-ZP	SBFSE-AA-ZP	SER-AA	SER-AA	1
	RL6H042***	RL6G042***	L, #1/3	L, #3/4	SBFSE-AA-ZP	SBFSE-AA-ZP	SER-AA	SER-AA	2
	RL6H049***	RL6G049***	L, #1/2	L, #1	SBFSE-AA-ZP	SBFSE-A-ZP	SER-AA	SER-A	2
	RL6H066***	RL6G066***	L, #3/4	L, #1-1/2	SBFSE-AA-ZP	SBFSE-A-ZP	SER-A	SER-A	2
	RL6H077***	RL6G077***	L,#3/4	L, #1-1/2	SBFSE-A-ZP	SBFSE-A-ZP	SER-A	SER-A	3
	RL6H090***	RL6G090***	L,#3/4	L, #2	SBFSE-A-ZP	SBFSE-A-ZP	SER-A	SER-A	5
	RL6H105***	RL6G105***	L,#1	L, #2	SBFSE-A-ZP	SBFSE-B-ZP	SER-A	SER-B	6
	RL6H121***	RL6G121***	L, #1	L, #2-1/2	SBFSE-A-ZP	SBFSE-B-ZP	SER-B	SER-B	6
	RL6H142***	RL6G142***	L,#1-1/2	L, #2-1/2	SBFSE-A-ZP	SBFSE-B-ZP	SER-B	SER-B	6
	RL6H162***	RL6G162***	L,#1-1/2	L, #3	SBFSE-B-ZP	SBFSE-C-ZP	SER-B	SER-B	6
	RL6H182***	RL6G182***	L, #1-1/2	L, #4	SBFSE-B-ZP	SBFSE-C-ZP	SER-B	SER-C	6
	RL6H200***	RL6G200***	L, #2	L, #4	SBFSE-B-ZP	SBFSE-C-ZP	SER-B	SER-C	6
	RL6H244***	RL6G244***	E, #2	E(R), #5	SBFSE-C-ZP	EBSSE-6-ZP	SER-C	SER-C	9
	RL6H281***	RL6G281***	E, #2-1/2	E(R), #5	SBFSE-C-ZP	EBSSE-6-ZP	SER-C	SER-C	12
4 FPI	RL4H027***	RL4G027***	–	–	SBFSE-AAA-ZP	SBFSE-AA-ZP	SER-AA	SER-AA	1
	RL4H032***	RL4G032***	–	–	SBFSE-AA-ZP	SBFSE-AA-ZP	SER-AA	SER-AA	1
	RL4H038***	RL4G038***	L, #1/3	L, #3/4	SBFSE-AA-ZP	SBFSE-AA-ZP	SER-AA	SER-AA	2
	RL4H051***	RL4G051***	L, #1/2	L, #1	SBFSE-AA-ZP	SBFSE-A-ZP	SER-AA	SER-A	2
	RL4H064***	RL4G064***	L, #3/4	L, #1-1/2	SBFSE-AA-ZP	SBFSE-A-ZP	SER-A	SER-A	3
	RL4H080***	RL4G080***	L, #3/4	L, #1-1/2	SBFSE-A-ZP	SBFSE-A-ZP	SER-A	SER-A	6
	RL4H094***	RL4G094***	L, #3/4	L, #2	SBFSE-A-ZP	SBFSE-A-ZP	SER-A	SER-B	6
	RL4H110***	RL4G110***	L, #1	L, #2	SBFSE-A-ZP	SBFSE-B-ZP	SER-A	SER-B	6
	RL4H125***	RL4G125***	L, #1	L, #2-1/2	SBFSE-A-ZP	SBFSE-B-ZP	SER-B	SER-B	6
	RL4H141***	RL4G141***	L, #1-1/2	L, #2-1/2	SBFSE-A-ZP	SBFSE-B-ZP	SER-B	SER-B	6
	RL4H155***	RL4G155***	L, #1-1/2	L, #3	SBFSE-A-ZP	SBFSE-C-ZP	SER-B	SER-B	6
	RL4H195***	RL4G195***	E, #2	E(R), #4	SBFSE-B-ZP	SBFSE-C-ZP	SER-B	SER-C	9
	RL4H230***	RL4G230***	E, #2	E(R), #5	SBFSE-B-ZP	SBFSE-C-ZP	SER-B	SER-C	12
R407A/ R448A/ R449A/B†									
6 FPI	RL6H035***	RL6G035***	–	–	SBFDE-AA-ZP	SBFDE-AA-ZP	SER-AA	SER-AA	1
	RL6H042***	RL6G042***	L, #1/3	L, #3/4	SBFDE-AA-ZP	SBFDE-AA-ZP	SER-AA	SER-AA	2
	RL6H049***	RL6G049***	L, #1/2	L, #3/4	SBFDE-AA-ZP	SBFDE-AA-ZP	SER-AA	SER-AA	2
	RL6H066***	RL6G066***	L, #1/2	L, #1	SBFDE-AA-ZP	SBFDE-A-ZP	SER-A	SER-A	2
	RL6H077***	RL6G077***	L, #3/4	L, #1-1/2	SBFDE-A-ZP	SBFDE-A-ZP	SER-A	SER-A	3
	RL6H090***	RL6G090***	L, #3/4	L, #1-1/2	SBFDE-A-ZP	SBFDE-B-ZP	SER-A	SER-A	5
	RL6H105***	RL6G105***	L, #1	L, #2	SBFDE-A-ZP	SBFDE-B-ZP	SER-A	SER-B	6
	RL6H121***	RL6G121***	L, #1	L, #2	SBFDE-A-ZP	SBFDE-B-ZP	SER-A	SER-B	6
	RL6H142***	RL6G142***	L, #1-1/2	L, #2-1/2	SBFDE-B-ZP	SBFDE-B-ZP	SER-B	SER-B	6
	RL6H162***	RL6G162***	L, #1-1/2	L, #2-1/2	SBFDE-B-ZP	SBFDE-B-ZP	SER-B	SER-B	6
	RL6H182***	RL6G182***	L, #1-1/2	L, #3	SBFDE-B-ZP	SBFDE-C-ZP	SER-B	SER-B	6
	RL6H200***	RL6G200***	L, #2	L, #3	SBFDE-B-ZP	SBFDE-C-ZP	SER-B	SER-B	6
	RL6H244***	RL6G244***	E, #2	E(R), #4	SBFDE-C-ZP	SBFDE-C-ZP	SER-B	SER-C	9
	RL6H281***	RL6G281***	E, #2-1/2	E(R), #5	SBFDE-C-ZP	SBFDE-C-ZP	SER-C	SER-C	12
4 FPI	RL4H027***	RL4G027***	–	–	SBFDE-AA-ZP	SBFDE-AA-ZP	SER-AA	SER-AA	1
	RL4H032***	RL4G032***	–	–	SBFDE-AA-ZP	SBFDE-AA-ZP	SER-AA	SER-AA	1
	RL4H038***	RL4G038***	L, #1/3	L, #3/4	SBFDE-AA-ZP	SBFDE-AA-ZP	SER-AA	SER-AA	2
	RL4H051***	RL4G051***	L, #1/2	L, #1	SBFDE-AA-ZP	SBFDE-A-ZP	SER-AA	SER-AA	2
	RL4H064***	RL4G064***	L, #1/2	L, #1	SBFDE-AA-ZP	SBFDE-A-ZP	SER-A	SER-A	3
	RL4H080***	RL4G080***	L, #3/4	L, #1-1/2	SBFDE-A-ZP	SBFDE-A-ZP	SER-A	SER-A	6
	RL4H094***	RL4G094***	L, #3/4	L, #2	SBFDE-A-ZP	SBFDE-B-ZP	SER-A	SER-A	6
	RL4H110***	RL4G110***	L, #1	L, #2	SBFDE-A-ZP	SBFDE-B-ZP	SER-A	SER-B	6
	RL4H125***	RL4G125***	L, #1	L, #2	SBFDE-A-ZP	SBFDE-B-ZP	SER-A	SER-B	6
	RL4H141***	RL4G141***	L, #1-1/2	L, #2-1/2	SBFDE-B-ZP	SBFDE-B-ZP	SER-B	SER-B	6
	RL4H155***	RL4G155***	L, #1-1/2	L, #2-1/2	SBFDE-B-ZP	SBFDE-B-ZP	SER-B	SER-B	6
	RL4H195***	RL4G195***	E, #1-1/2	E(R), #3	SBFDE-B-ZP	SBFDE-C-ZP	SER-B	SER-B	9
	RL4H230***	RL4G230***	E, #2	E(R), #4	SBFDE-B-ZP	SBFDE-C-ZP	SER-B	SER-C	12

Distributor lines are 1/4" diameter and 14" long. Distributor connection size is 1/2" for all hot gas defrost models with "L" nozzle and 1-1/8" for models with "E" nozzle.

* Each asterisk represents a variable character based on voltage, motor and vintage ordered. See page 4 for nomenclature.

– Single feed circuit coils do not get a distributor/nozzle.

^ TXV selections are based on -20°F suction temp., 8°F to 12°F evaporator TD. Contact factory for operating conditions outside of this range. Do not use pressure limiting TXVs when the condensing unit includes a CPR valve.

† SBFDE expansion valves are compatible with R407A, R448A and R449A/B. For other valves, follow manufacturers selection guidelines.

Base models (no factory-mounted components) include nozzles sized for 100°F liquid shipped loose.

LOW PROFILE UNIT COOLER

Specifications

Models		TXV† Type	Refrigerant Connections			No. of Hanger Slot Locations	Dimensions (Inches)				Approx. Ship Wt. (Lbs.)
RL6A	RL*E/G/H		LIQ. LINE^	RL6A SUCT.	RL*E/G/H SUCT.		A[1]	B[1]	C[1]	W	
6 FPI											
RL6A041***	RL6*035***	EXT	3/8	5/8	5/8	2	17-1/4	–	–	27-1/8	41
RL6A052***	RL6*042***	EXT	3/8	5/8	5/8	2	17-1/4	–	–	27-1/8	44
RL6A066***	RL6*049***	EXT	3/8	5/8	5/8	2	17-1/4	–	–	27-1/8	47
RL6A073***	RL6*066***	EXT	3/8	5/8	7/8	2	33-1/4	–	–	43-5/8	52
RL6A094***	RL6*077***	EXT	3/8	5/8	7/8	2	33-1/4	–	–	43-5/8	55
RL6A117***	RL6*090***	EXT	3/8	5/8	7/8	2	33-1/4	–	–	43-5/8	58
RL6A130***	RL6*105***	EXT	3/8	5/8	7/8	2	33-1/4	–	–	43-5/8	62
RL6A141***	–	EXT	3/8	5/8	–	2	49-1/4	–	–	60-1/8	72
RL6A161***	RL6*121***	EXT	3/8	5/8	1-1/8	2	49-1/4	–	–	60-1/8	78
RL6A181***	RL6*142***	EXT	3/8	7/8	1-1/8	2	49-1/4	–	–	60-1/8	85
RL6A195***	–	EXT	3/8	7/8	–	2	65-1/4	–	–	76-5/8	115
RL6A235***	RL6*162***	EXT	3/8	7/8	1-1/8	2	65-1/4	–	–	76-5/8	124
RL6A260***	RL6*182***	EXT	3/8	7/8	1-1/8	2	65-1/4	–	–	76-5/8	147
–	RL6*200***	EXT	3/8	–	1-1/8	3	81-1/4	32-5/8	48-5/8	93-1/8	195
RL6A295***	–	EXT	3/8	1-1/8	–	3	81-1/4	32-5/8	48-5/8	93-1/8	218
–	RL6*244***	EXT	3/8	–	1-1/8	3	97-1/4	48-5/8	48-5/8	109-5/8	238
RL6A330***	–	EXT	3/8	1-1/8	–	3	97-1/4	48-5/8	48-5/8	109-5/8	257
RL6A390***	RL6*281***	EXT	3/8	1-1/8	1-1/8	3	97-1/4	48-5/8	48-5/8	109-5/8	262
4 FPI											
–	RL4*027***	EXT	3/8	–	5/8	2	17-1/4	–	–	27-1/8	40
–	RL4*032***	EXT	3/8	–	5/8	2	17-1/4	–	–	27-1/8	42
–	RL4*038***	EXT	3/8	–	5/8	2	17-1/4	–	–	27-1/8	46
–	RL4*051***	EXT	3/8	–	7/8	2	33-1/4	–	–	43-5/8	50
–	RL4*064***	EXT	3/8	–	7/8	2	33-1/4	–	–	43-5/8	52
–	RL4*080***	EXT	3/8	–	7/8	2	33-1/4	–	–	43-5/8	55
–	RL4*094***	EXT	3/8	–	1-1/8	2	49-1/4	–	–	60-1/8	79
–	RL4*110***	EXT	3/8	–	1-1/8	2	49-1/4	–	–	60-1/8	84
–	RL4*125***	EXT	3/8	–	1-1/8	2	65-1/4	–	––	76-5/8	124
–	RL4*141***	EXT	3/8	–	1-1/8	2	65-1/4	–	–	76-5/8	144
–	RL4*155***	EXT	3/8	–	1-1/8	3	81-1/4	32-5/8	48-5/8	93-1/8	191
–	RL4*195***	EXT	3/8	–	1-1/8	3	97-1/4	48-5/8	48-5/8	109-5/8	257
–	RL4*230***	EXT	3/8	–	1-1/8	3	97-1/4	48-5/8	48-5/8	109-5/8	262

* Each asterisk represents a variable character based on defrost, voltage, motor and vintage ordered. See page 4 for nomenclature.

– Not available.

† Externally equalized.

^ For units with mounted TXV components. See Nozzle/TXV table for distributor connection size when TXV is field installed.

1. Dimensions listed are the distance between hanger slots. Hanger slots are 3/4″ deep x 1/2″ wide.

NEXT-GEN ALL-TEMP

Physical Dimensions

Installation Notes:

(1) Install 12" away from back wall.

(2) Drain connection is located in the center/rear of the drain pan.

(3) Standard refrigerant connections are located at the left rear (facing air discharge).

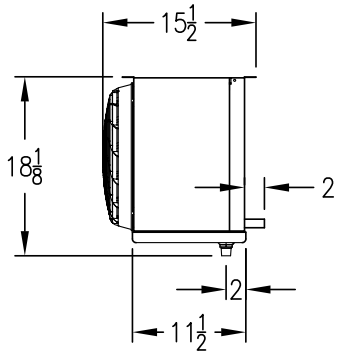

All dimensions are in inches.

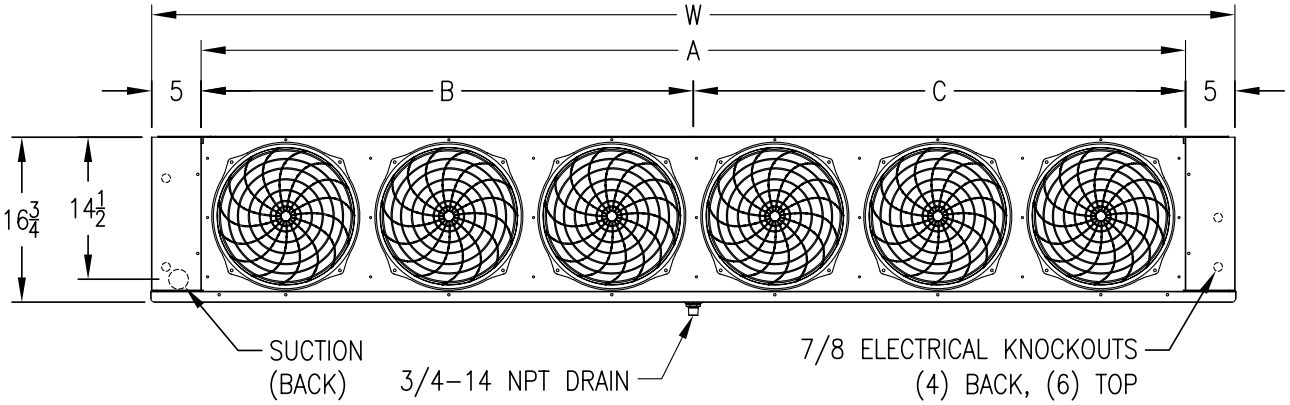

NOTE: Refrigerant and electrical connection locations have been changed for the Next-Gen All-Temp design. Standard connections are now opposite of the legacy All-Temp models.

Russell's Next-Gen All-Temp Low Profile Unit Cooler can be used in combination with Next-Gen MiniCon Condensing Units to provide complete refrigeration solutions for small to medium walk-ins

Due to continuing product development, specifications are subject to change without notice.

Russell

201 Thomas French Drive, Scottsboro, AL 35769 • PHONE (256) 259-7400 • FAX (256) 259-7478 • **russell.htpg.com**

E-mail or call us for help: **parts@htpgusa.com** or **(800) 288-9488**