HEATING & COOLING PRODUCTS

PGR5
Product Specifications

UP to 16 SEER, UP to 12.5 EER, PACKAGE GAS / ELECTRIC UNIT, 2 to 5 TONS
208/230 Volt, 1–phase, 60 Hz
208/230 Volt, 3–phase, 60 Hz

REFRIGERATION CIRCUIT
- Environmentally sound R–410A refrigerant
- Copper tube/aluminum fin condenser and evaporator coils
- Tin–coated copper evaporator coil standard (single–phase only)
- Two stage scroll compressors standard on all models
- Two stage gas valve and two speed inducer motor on all models

EASY TO INSTALL AND SERVICE
- Installs easily on a rooftop or at ground level
- Easy three–panel accessibility for maintenance and installation
- Easily converts to down discharge applications
- Combination two–stage gas heating and electric cooling
- Low NOx units available

BUILT TO LAST
- Hail guard (3/8" spacing) wire grilles standard
- Induced–draft combustion and venting
- High efficiency ECM blower motor on all models
- Pre–painted steel cabinet
- Direct spark ignition
- Stainless Steel tubular heat exchanger standard
- Vertical condenser fan discharge
- Full perimeter steel base rails
- Crankcase heaters on select models
- High and low pressure switches provide added reliability for the compressor

WARRANTY*
- 5 year No Hassle Replacement limited warranty
- Lifetime heat exchanger limited warranty
- 5 year parts limited warranty (including compressor and coils)
  - With timely registration, an additional 5 year parts limited warranty (including compressor and coils)

*For owner occupied, residential applications only. See warranty certificate for complete details and restrictions, including warranty coverage for other applications.

AHRI CERTIFIED www.ahridirectory.org

Use of the AHRI Certified TM Mark indicates a manufacturer's participation in the program. For verification of certification for individual products, go to www.ahridirectory.org .

ENERGY STAR PARTNER

As an Energy Star® Partner, International Comfort Products has determined that this product meets the ENERGY STAR® guidelines for energy efficiency.

c UL us LISTED

UNIT PERFORMANCE DATA

Model Number	COOLING Net Capacity BTU/h High Stage	SEER	EER	HEATING Input BTU/h High/Low	Efficiency AFUE %	Unit Dimensions Height x Width x Depth inches (mm)	Operating Weight lbs (kg)
PGR524040KGP*	23,000	15.0	12.0	40,000/26,000	78.0	44–1/8 x 47 x 31–7/16 (1121 x 1194 x 799)	342 (155)
PGR524060KGP*	23,000	15.0	12.0	60,000/39,000	78.6		342 (155)
PGR530040****	29,000	15.0	12.0	40,000/26,000	78.0	44–1/8 x 47 x 31–7/16 (1121 x 1194 x 799)	376 (170)
PGR530060****	29,000	15.0	12.0	60,000/39,000	78.6		376 (170)
PGR536060****	35,400	16.0	12.5	60,000/39,000	78.6	44–3/4 x 47 x 42–15/16 (1137 x 1194 x 1091)	463 (210)
PGR536090****	35,400	16.0	12.5	90,000/58,500	79.2		463 (210)
PGR542060****	42,000	16.0	12.5	60,000/39,000	78.6	44–3/4 x 47 x 42–15/16 (1137 x 1194 x 1091)	463 (210)
PGR542090****	42,000	16.0	12.5	90,000/58,500	79.2		463 (210)
PGR548090****	47,500	16.0	12.3	90,000/58,500	79.2	50–3/4 x 47 x 42–15/16 (1289 x 1194 x 1091)	481 (218)
PGR548115****	47,500	16.0	12.3	115,000/75,000	80.1		481 (218)
PGR548130****	47,500	16.0	12.3	130,000/84,500	80.0		481 (218)
PGR560090****	57,000	16.0	12.3	90,000/58,500	79.2	52–3/4 x 47 x 42–15/16 (1340 x 1194 x 1091)	509 (231)
PGR560115****	57,000	16.0	12.3	115,000/75,000	80.1		509 (231)
PGR560130****	57,000	16.0	12.3	130,000/84,500	80.0		509 (231)

**** = **KGP0** – 208/230–1–60, Tin Coated Evaporator Main Tubes plus Stainless Steel Heat Exchanger
= **KGP1** – 208/230–1–60, Tin Coated Evaporator Main Tubes plus Stainless Steel Heat Exchanger, Low NOx
= **HGS0** – 208/230–3–60, Stainless Steel Heat Exchanger
= **HGS1** – 208/230–3–60, Stainless Steel Heat Exchanger, Low NOx

MODEL NOMENCLATURE

1	2	3,4	5,6	7,8,9	10	11,12	13	14	15
P	G	R5	36	090	K	00	0	C	1

MODEL SERIES

P = Package

TYPE

A = Air Conditioner
H = Heat Pump
G = Gas/Electric

TIER

R5 = Mainline

NOMINAL CLG CAPACITY

24 = 24,000 BTUH = 2 Tons
36 = 36,000 BTUH = 3 Tons
48 = 48,000 BTUH = 4 Tons
60 = 60,000 BTUH = 5 Tons

NOMINAL HTG BTUH (input)

000 = no factory heat
040 = 40,000 BTU/hr
060 = 60,000 BTU/hr
090 = 90,000 BTU/hr
115 = 115,000 BTU/hr
130 = 130,000 BTU/hr

VOLTAGE

K = 208/230–1–60
H = 208/230–3–60

FACTORY INSTALLED OPTIONS

GP = Tin Coated Copper Evap Main Tubes plus Stainless Steel Heat Exchanger
GS = Stainless Steel Heat Exchanger

FEATURE CODE

0 = Standard
1 = Low NOx

Sales Model Digit

Engineering Digit

A–WEIGHTED SOUND POWER LEVEL (dBA)

Model PGR5	Sound Ratings (dBA)	125	250	500	1000	2000	4000	8000
24	73	60.0	62.5	68.5	68.5	64.0	60.0	53.0
30	77	57.5	67.0	73.5	72.0	67.0	61.0	52.5
36	73	62.5	65.5	67.5	68.0	65.5	60.0	52.5
42	73	60.5	63.5	68.0	68.0	66.0	60.5	53.0
48	72	60.0	63.5	66.0	67.0	63.5	58.5	49.5
60	75	69.0	67.0	69.0	68.0	65.0	61.5	54.0

NOTE: Tested in accordance with AHRI Standard 270 (not listed in AHRI).

UNIT SPECIFICATIONS

UNIT SIZE	24040	24060	30040	30060	36060	36090	42060	42090
NOMINAL CAPACITY (ton)	2	2	2–1/2	2–1/2	3	3	3–1/2	3–1/2
SHIPPING WEIGHT lb. **SHIPPING WEIGHT** (kg)	352 160	352 160	359 163	359 163	455 206	455 206	455 206	455 206
COMPRESSORS	2–Stage Scroll							
Quantity	1							
REFRIGERANT (R–410A) Quantity lb. Quantity (kg)	 6.4 2.9	 6.4 2.9	 8.3 3.8	 8.3 3.8	 8.1 3.7	 8.1 3.7	 8.7 3.9	 8.7 3.9
REFRIGERANT METERING DEVICE	TXV							
OUTDOOR COIL Rows...Fins/in. Face Area (sq ft)	 1..21 13.6	 1...21 13.6	 2...21 13.6	 2...21 13.6	 2...21 13.6	 2...21 13.6	 2...21 13.6	 2...21 13.6
OUTDOOR FAN Nominal CFM Diameter in. Diameter (mm) Motor Hp (Rpm)	 2500 24 609.6 1/10 (810)	 2500 24 609.6 1/10 (810)	 2700 24 609.6 1/5 (810)	 2700 24 609.6 1/5 (810)	 3000 26 600.4 1/5 (810)	 3000 26 600.4 1/5 (810)	 3000 26 660.4 1/5 (810	 3000 26 660.4 1/5 (810)
INDOOR COIL Rows...Fins/in. Face Area (sq ft)	 3...17 3.7	 3...17 3.7	 3...17 3.7	 3...17 3.7	 3...17 4.7	 3...17 4.7	 3...17 4.7	 3...17 4.7
INDOOR BLOWER Nominal Low Stage Cooling Airflow (Cfm) Nominal High Stage Cooling Airflow (Cfm) Size in. Size (mm.) Motor HP (RPM)	 600 800 10x10 254x254 1/2 (1050)	 600 800 10x10 254x254 1/2 (1050)	 750 1000 10x10 254x254 1/2 (1050)	 750 1000 10x10 254x254 1/2 (1050)	 900 1200 11x10 279.4x254 3/4 (1000)	 900 1200 11x10 279.4x254 3/4 (1000)	 1050 1400 11x10 279.4x254 3/4 (1075)	 1050 1400 11x10 279.4x254 3/4 (1075)
FURNACE SECTION* Burner Orifice No. (Qty...Drill Size) Natural Gas (Factory Installed) Propane Gas	 2...44 2...55	 3...44 3...55	 2...44 2...55	 3...44 3...55	 3...44 3...55	 3…38 3…53	 3...44 3...55	 3...38 3...53
HIGH–PRESSURE SWITCH **(psig) Cut–out Reset (Auto)**	650 +/– 15 420 +/– 25							
LOSS–OF–CHARGE / LOW–PRESSURE SWITCH **(psig) cut–out Reset (auto)**	50 +/– 7 95 +/– 7							
DUCT RETURN–AIR FILTERS†‡ Throwaway Size in. (mm)	 20x20x1 508x508x25	 20x24x1 508x610x25			 24x30x1 610x762x25			

UNIT SIZE	48090	48115	48130	60090	60115	60130
NOMINAL CAPACITY (ton)	4	4	4	5	5	5
SHIPPING WEIGHT lb **SHIPPING WEIGHT kg**	500 227	500 227	500 227	520 236	520 236	520 236
COMPRESSORS	2–Stage Scroll					
Quantity	1					
REFRIGERANT (R–410A) Quantity lb Quantity (kg.)	 10.8 4.9	 10.8 4.9	 10.8 4.9	 12.1 5.5	 12.1 5.5	 12.1 5.5
REFRIGERANT METERING DEVICE	TXV					
OUTDOOR COIL Rows...Fins/in. Face Area (sq ft)	 2...21 19.4	 2...21 19.4	 2...21 19.4	 2...21 21.4	 2...21 21.4	 2...21 21.4
OUTDOOR FAN Nominal Cfm Diameter in. Diameter (mm) Motor Hp (Rpm)	 3300 26 660.4 1/5 (810)	 3300 26 660.4 1/5 (810)	 3300 26 660.4 1/5 (810)	 3600 26 660.4 1/5 (810)	 3600 26 660.4 1/5 (810)	 3600 26 660.4 1/5 (810)
INDOOR COIL Rows...Fins/in. Face Area (sq ft)	 3...17 5.7	 3...17 5.7	 3...17 5.7	 3...17 5.7	 3...17 5.7	 3...17 5.7
INDOOR BLOWER Nominal Low Stage Cooling Airflow (Cfm) Nominal High Stage Cooling Airflow (Cfm) Size in. Size (mm) Motor HP (RPM)	 1200 1600 11x10 279.4x254 1.0 (1075)	 1200 1600 11x10 279.4x254 1.0 (1075)	 1200 1600 11x10 279.4x254 1.0 (1075)	 1200 1750 11x10 279.4x254 1.0 (1075)	 1200 1750 11x10 279.4x254 1.0 (1075)	 1200 1750 11x10 279.4x254 1.0 (1075)
FURNACE SECTION* **Burner Orifice No. (Qty...Drill Size)** Natural Gas (Factory Installed) Propane Gas	 3...38 3...53	 3...33 3...51	 3...31 3...49	 3...38 3...53	 3...33 3...51	 3...31 3...49
HIGH–PRESSURE SWITCH **(psig) Cut–out Reset (Auto)**	650 +/– 15 420 +/– 25					
LOSS–OF–CHARGE / LOW–PRESSURE SWITCH (psig) **cut–out Reset (auto)**	50 +/–7 95 +/– 7					
DUCT RETURN–AIR FILTERS Throwaway†‡ **in.** **(mm)**	24x36x1 610x914x25					

*Based on altitude of 0 to 2000 ft (0–610 m).

† Required filter sizes shown are based on the larger of the AHRI (Air Conditioning Heating and Refrigeration Institute) rated cooling airflow or the heating airflow velocity of 300 ft/minute for throwaway type. Air filter pressure drop for non–standard filters must not exceed 0.08 IN. W.C.

‡ If using accessory filter rack refer to the filter rack installation instructions for correct filter sizes and quantity.

UNIT AIRFLOW – DRY COIL AIR DELIVERY* – HORIZONTAL AND DOWNFLOW DISCHARGE

Unit PGR5	HEATING RISE RANGE	MOTOR SPEED	WIRE COLOR		EXTERNAL STATIC PRESSURE (IN. W.C.)									
					0.1	0.2	0.3	0.4	0.5	0.6	0.7	0.8	0.9	1
24040	15 - 45ºF Low Stage 20 - 50ºF High Stage	Low[3]	Blue	CFM	714	525	---	---	---	---	---	---	---	---
				BHP	0.08	0.07	---	---	---	---	---	---	---	---
				Low Stage Heat Rise ºF(ºC)	26 (15)	36 (20)	NA	NA	NA	NA	NA	NA	NA	NA
				High Stage Heat Rise ºF(ºC)	41 (23)	NA	NA	NA	NA	NA	NA	NA	NA	NA
		Med-Low[1]	Pink	CFM	689	597	489	352	---	---	---	---	---	---
				BHP	0.08	0.06	0.06	0.05	---	---	---	---	---	---
				Low Stage Heat Rise ºF(ºC)	27 (15)	31 (17)	38 (21)	NA	NA	NA	NA	NA	NA	NA
				High Stage Heat Rise ºF(ºC)	42 (23)	49 (27)	NA	NA	NA	NA	NA	NA	NA	NA
		Medium[4]	Red	CFM	877	779	698	598	519	410	---	---	---	---
				BHP	0.12	0.12	0.13	0.14	0.15	0.15	---	---	---	---
				Low Stage Heat Rise ºF(ºC)	21 (12)	24 (13)	27 (15)	31 (17)	36 (20)	NA	NA	NA	NA	NA
				High Stage Heat Rise ºF(ºC)	33 (18)	37 (21)	42 (23)	49 (27)	NA	NA	NA	NA	NA	NA
		Med-High[2]	Orange	CFM	921	829	754	663	582	485	371	---	---	---
				BHP	0.14	0.14	0.15	0.16	0.17	0.17	0.18	---	---	---
				Low Stage Heat Rise ºF(ºC)	20 (11)	23 (13)	25 (14)	28 (16)	32 (18)	39 (22)	NA	NA	NA	NA
				High Stage Heat Rise ºF(ºC)	32 (18)	35 (20)	39 (21)	44 (24)	50 (28)	NA	NA	NA	NA	NA
		High	Black	CFM	1291	1206	1142	1081	1017	951	888	823	753	668
				BHP	0.31	0.32	0.33	0.34	0.34	0.35	0.36	0.36	0.37	0.37
				Low Stage Heat Rise ºF(ºC)	15 (8)	16 (9)	16 (9)	17 (10)	18 (10)	20 (11)	21 (12)	23 (13)	25 (14)	28 (16)
				High Stage Heat Rise ºF(ºC)	23 (13)	24 (13)	25 (14)	27 (15)	29 (16)	31 (17)	33 (18)	35 (20)	39 (21)	44 (24)

Unit PGR5	HEATING RISE RANGE	MOTOR SPEED	WIRE COLOR		EXTERNAL STATIC PRESSURE (IN. W.C.)									
					0.1	0.2	0.3	0.4	0.5	0.6	0.7	0.8	0.9	1
24060	25 - 55ºF Low Stage 25 - 55ºF High Stage	Low[1]	Blue	CFM	689	597	489	352	---	---	---	---	---	---
				BHP	0.08	0.06	0.06	0.05	---	---	---	---	---	---
				Low Stage Heat Rise ºF(ºC)	41 (23)	48 (27)	NA	NA	NA	NA	NA	NA	NA	NA
				High Stage Heat Rise ºF (ºC)	NA	NA	NA	NA	NA	NA	NA	NA	NA	NA
		Med-Low[3]	Pink	CFM	777	692	583	465	318	---	---	---	---	---
				BHP	0.09	0.10	0.10	0.11	0.12	---	---	---	---	---
				Low Stage Heat Rise ºF(ºC)	37 (20)	41 (23)	49 (27)	NA	NA	NA	NA	NA	NA	NA
				High Stage Heat Rise ºF(ºC)	NA	NA	NA	NA	NA	NA	NA	NA	NA	NA
		Medium[2]	Red	CFM	921	829	754	663	582	485	371	---	---	---
				BHP	0.14	0.14	0.15	0.16	0.17	0.17	0.18	---	---	---
				Low Stage Heat Rise ºF(ºC)	31 (17)	34 (19)	38 (21)	43 (24)	49 (27)	NA	NA	NA	NA	NA
				High Stage Heat Rise ºF(ºC)	48 (27)	54 (30)	NA	NA	NA	NA	NA	NA	NA	NA
		Med-High[4]	Orange	CFM	1229	1171	1105	1049	980	913	838	775	679	516
				BHP	0.28	0.30	0.30	0.31	0.32	0.33	0.33	0.34	0.34	0.33
				Low Stage Heat Rise ºF(ºC)	NA	NA	26 (14)	27 (15)	29 (16)	31 (17)	34 (19)	37 (20)	42 (23)	55 (31)
				High Stage Heat Rise ºF(ºC)	36 (20)	38 (21)	40 (22)	42 (24)	45 (25)	49 (27)	53 (29)	NA	NA	NA
		High	Black	CFM	1291	1206	1142	1081	1017	951	888	823	753	668
				BHP	0.31	0.32	0.33	0.34	0.34	0.35	0.36	0.36	0.37	0.37
				Low Stage Heat Rise ºF(ºC)	NA	NA	25 (14)	26 (15)	28 (16)	30 (17)	32 (18)	35 (19)	38 (21)	43 (24)
				High Stage Heat Rise ºF(ºC)	34 (19)	37 (20)	39 (22)	41 (23)	44 (24)	47 (26)	50 (28)	54 (30)	NA	NA

See notes on page 10.

UNIT AIRFLOW – DRY COIL AIR DELIVERY* – HORIZONTAL AND DOWNFLOW DISCHARGE

UNIT PGR5	HEATING RISE RANGE	MOTOR SPEED	WIRE COLOR		EXTERNAL STATIC PRESSURE (IN. W.C.)									
					0.1	0.2	0.3	0.4	0.5	0.6	0.7	0.8	0.9	1
30040	15 - 45ºF Low Stage 20 - 50ºF High Stage	Low[3]	Blue	CFM	714	525	---	---	---	---	---	---	---	---
				BHP	0.08	0.07	---	---	---	---	---	---	---	---
				Low Stage Heat Rise ºF (ºC)	26 (15)	36 (20)	NA	NA	NA	NA	NA	NA	NA	NA
				High Stage Heat Rise ºF (ºC)	41 (23)	NA	NA	NA	NA	NA	NA	NA	NA	NA
		Med-Low[1]	Pink	CFM	831	765	670	586	466	299	---	---	---	---
				BHP	0.11	0.12	0.12	0.13	0.13	0.14	---	---	---	---
				Low Stage Heat Rise ºF (ºC)	23 (13)	25 (14)	28 (16)	32 (18)	40 (22)	NA	NA	NA	NA	NA
				High Stage Heat Rise ºF (ºC)	35 (19)	38 (21)	43 (24)	50 (28)	NA	NA	NA	NA	NA	NA
		Medium[4]	Red	CFM	877	779	698	598	519	410	---	---	---	---
				BHP	0.12	0.12	0.13	0.14	0.15	0.15	---	---	---	---
				Low Stage Heat Rise ºF (ºC)	21 (12)	24 (13)	27 (15)	31 (17)	36 (20)	NA	NA	NA	NA	NA
				High Stage Heat Rise ºF (ºC)	33 (18)	37 (21)	42 (23)	49 (27)	NA	NA	NA	NA	NA	NA
		Med-High[2]	Orange	CFM	1139	1069	1012	937	870	786	724	626	512	381
				BHP	0.22	0.23	0.24	0.24	0.25	0.26	0.26	0.27	0.27	0.28
				Low Stage Heat Rise ºF (ºC)	17 (9)	18 (10)	19 (10)	20 (11)	22 (12)	24 (13)	26 (14)	30 (17)	37 (20)	NA
				High Stage Heat Rise ºF (ºC)	26 (14)	27 (15)	29 (16)	31 (17)	33 (19)	37 (21)	40 (22)	47 (26)	NA	NA
		High	Black	CFM	1531	1460	1382	1301	1209	1114	1003	890	764	629
				BHP	0.53	0.52	0.50	0.48	0.46	0.44	0.42	0.40	0.37	0.35
				Low Stage Heat Rise ºF (ºC)	NA	NA	NA	NA	16 (9)	17 (9)	19 (10)	21 (12)	25 (14)	30 (17)
				High Stage Heat Rise ºF (ºC)	NA	20 (11)	21 (12)	22 (12)	24 (13)	26 (15)	29 (16)	33 (18)	38 (21)	46 (26)

UNIT PGR5	HEATING RISE RANGE	MOTOR SPEED	WIRE COLOR		EXTERNAL STATIC PRESSURE (IN. W.C.)									
					0.1	0.2	0.3	0.4	0.5	0.6	0.7	0.8	0.9	1
30060	25 - 55ºF Low Stage 25 - 55ºF High Stage	Low[3]	Blue	CFM	777	692	583	465	318	---	---	---	---	---
				BHP	0.09	0.10	0.10	0.11	0.12	---	---	---	---	---
				Low Stage Heat Rise ºF (ºC)	37 (21)	41 (23)	49 (27)	NA	NA	NA	NA	NA	NA	NA
				High Stage Heat Rise ºF (ºC)	NA	NA	NA	NA	NA	NA	NA	NA	NA	NA
		Med-Low[1]	Pink	CFM	831	765	670	586	466	299	---	---	---	---
				BHP	0.11	0.12	0.12	0.13	0.13	0.14	---	---	---	---
				Low Stage Heat Rise ºF (ºC)	34 (19)	37 (21)	43 (24)	49 (27)	NA	NA	NA	NA	NA	NA
				High Stage Heat Rise ºF (ºC)	54 (30)	NA	NA	NA	NA	NA	NA	NA	NA	NA
		Medium[2]	Red	CFM	1139	1069	1012	937	870	786	724	626	512	381
				BHP	0.22	0.23	0.24	0.24	0.25	0.26	0.26	0.27	0.27	0.28
				Low Stage Heat Rise ºF (ºC)	25 (14)	27 (15)	28 (16)	30 (17)	33 (18)	36 (20)	39 (22)	46 (26)	NA	NA
				High Stage Heat Rise ºF (ºC)	39 (22)	42 (23)	44 (24)	47 (26)	51 (28)	NA	NA	NA	NA	NA
		Med-High[4]	Orange	CFM	1229	1171	1105	1049	980	913	838	775	679	516
				BHP	0.28	0.30	0.30	0.31	0.32	0.33	0.33	0.34	0.34	0.33
				Low Stage Heat Rise ºF (ºC)	NA	NA	26 (14)	27 (15)	29 (16)	31 (17)	34 (19)	37 (21)	42 (23)	55 (31)
				High Stage Heat Rise ºF (ºC)	36 (20)	38 (21)	40 (22)	42 (23)	45 (25)	49 (27)	53 (29)	NA	NA	NA
		High	Black	CFM	1531	1460	1382	1301	1209	1114	1003	890	764	629
				BHP	0.53	0.52	0.50	0.48	0.46	0.44	0.42	0.40	0.37	0.35
				Low Stage Heat Rise ºF (ºC)	NA	NA	NA	NA	NA	26 (14)	28 (16)	32 (18)	37 (21)	45 (25)
				High Stage Heat Rise ºF (ºC)	29 (16)	30 (17)	32 (18)	34 (19)	37 (21)	40 (22)	44 (24)	50 (28)	NA	NA

See notes on page 10.

UNIT AIRFLOW – DRY COIL AIR DELIVERY* – HORIZONTAL AND DOWNFLOW DISCHARGE

UNIT PGR5	HEATING RISE RANGE	MOTOR SPEED	WIRE COLOR		EXTERNAL STATIC PRESSURE (IN. W.C.)									
					0.1	0.2	0.3	0.4	0.5	0.6	0.7	0.8	0.9	1
36060	25 - 55ºF Low Stage 25 - 55ºF High Stage	Low[3]	Blue	CFM	694	624	533	460	383	328	---	---	---	---
				BHP	0.05	0.05	0.06	0.07	0.07	0.08	---	---	---	---
				Low Stage Heat Rise ºF (ºC)	41 (23)	46 (25)	54 (30)	NA	NA	NA	NA	NA	NA	NA
				High Stage Heat Rise ºF (ºC)	NA	NA	NA	NA	NA	NA	NA	NA	NA	NA
		Med-Low[1]	Pink	CFM	934	864	810	745	698	649	571	525	486	428
				BHP	0.10	0.10	0.11	0.12	0.13	0.14	0.14	0.15	0.16	0.17
				Low Stage Heat Rise ºF (ºC)	31 (17)	33 (18)	35 (20)	38 (21)	41 (23)	44 (24)	50 (28)	54 (30)	NA	NA
				High Stage Heat Rise ºF (ºC)	48 (26)	52 (29)	55 (31)	NA	NA	NA	NA	NA	NA	NA
		Medium[4]	Red	CFM	1213	1169	1110	1065	1016	964	923	878	820	777
				BHP	0.16	0.17	0.17	0.19	0.20	0.21	0.22	0.23	0.24	0.25
				Low Stage Heat Rise ºF (ºC)	NA	NA	26 (14)	27 (15)	28 (16)	30 (16)	31 (17)	33 (18)	35 (19)	37 (20)
				High Stage Heat Rise ºF (ºC)	37 (20)	38 (21)	40 (22)	42 (23)	44 (24)	46 (26)	48 (27)	51 (28)	54 (30)	NA
		Med-High[2]	Orange	CFM	1251	1198	1149	1104	1066	1017	970	932	892	839
				BHP	0.19	0.21	0.21	0.23	0.24	0.25	0.26	0.27	0.28	0.29
				Low Stage Heat Rise ºF (ºC)	NA	NA	25 (14)	26 (14)	27 (15)	28 (16)	29 (16)	31 (17)	32 (18)	34 (19)
				High Stage Heat Rise ºF (ºC)	36 (20)	37 (21)	39 (22)	40 (22)	42 (23)	44 (24)	46 (25)	48 (27)	50 (28)	53 (29)
		High	Black	CFM	1466	1423	1384	1343	1308	1263	1219	1183	1145	1106
				BHP	0.30	0.31	0.33	0.34	0.35	0.36	0.37	0.38	0.40	0.41
				Low Stage Heat Rise ºF (ºC)	NA	NA	NA	NA	NA	NA	NA	NA	25 (14)	26 (14)
				High Stage Heat Rise ºF (ºC)	30 (17)	31 (17)	32 (18)	33 (18)	34 (19)	35 (20)	37 (20)	38 (21)	39 (22)	40 (22)

UNIT PGR5	HEATING RISE RANGE	MOTOR SPEED	WIRE COLOR		EXTERNAL STATIC PRESSURE (IN. W.C.)									
					0.1	0.2	0.3	0.4	0.5	0.6	0.7	0.8	0.9	1
36090	35 - 65ºF Low Stage 35 - 65ºF High Stage	Low[3]	Blue	CFM	1097	971	823	747	669	636	558	513	456	412
				BHP	0.12	0.11	0.10	0.11	0.12	0.13	0.13	0.14	0.15	0.16
				Low Stage Heat Rise ºF (ºC)	39 (22)	44 (25)	52 (29)	58 (32)	64 (36)	NA	NA	NA	NA	NA
				High Stage Heat Rise ºF (ºC)	61 (34)	NA	NA	NA	NA	NA	NA	NA	NA	NA
		Med-Low[1]	Pink	CFM	934	864	810	745	698	649	571	525	486	428
				BHP	0.10	0.10	0.11	0.12	0.13	0.14	0.14	0.15	0.16	0.17
				Low Stage Heat Rise ºF (ºC)	46 (26)	50 (28)	53 (29)	58 (32)	62 (34)	NA	NA	NA	NA	NA
				High Stage Heat Rise ºF (ºC)	NA	NA	NA	NA	NA	NA	NA	NA	NA	NA
		Medium[2]	Red	CFM	1251	1198	1149	1104	1066	1017	970	932	892	839
				BHP	0.19	0.21	0.21	0.23	0.24	0.25	0.26	0.27	0.28	0.29
				Low Stage Heat Rise ºF (ºC)	NA	36 (20)	37 (21)	39 (22)	40 (22)	42 (23)	44 (25)	46 (26)	48 (27)	51 (28)
				High Stage Heat Rise ºF (ºC)	54 (30)	56 (31)	59 (33)	61 (34)	63 (35)	NA	NA	NA	NA	NA
		Med-High[4]	Orange	CFM	1451	1415	1372	1327	1287	1249	1212	1168	1130	1094
				BHP	0.29	0.30	0.31	0.32	248.5 9	0.35	0.36	0.37	0.38	0.39
				Low Stage Heat Rise ºF (ºC)	NA	NA	NA	NA	NA	NA	35 (20)	37 (20)	38 (21)	39 (22)
				High Stage Heat Rise ºF (ºC)	46 (26)	48 (26)	49 (27)	51 (28)	52 (29)	54 (30)	56 (31)	58 (32)	60 (33)	62 (34)
		High	Black	CFM	1466	1423	1384	1343	1308	1263	1219	1183	1145	1106
				BHP	0.30	0.31	0.33	0.34	0.35	0.36	0.37	0.38	0.40	0.41
				Low Stage Heat Rise ºF (ºC)	NA	NA	NA	NA	NA	NA	35 (20)	36 (20)	38 (21)	39 (22)
				High Stage Heat Rise ºF (ºC)	46 (26)	47 (26)	49 (27)	50 (28)	52 (29)	53 (30)	55 (31)	57 (32)	59 (33)	61 (34)

See notes on page 10.

UNIT AIRFLOW – DRY COIL AIR DELIVERY* – HORIZONTAL AND DOWNFLOW DISCHARGE

UNIT PGR5	HEATING RISE RANGE	MOTOR SPEED	WIRE COLOR		EXTERNAL STATIC PRESSURE (IN. W.C.)									
					0.1	0.2	0.3	0.4	0.5	0.6	0.7	0.8	0.9	1
42060	25 - 55ºF Low Stage 25 - 55ºF High Stage	Low[3]	Blue	CFM	694	624	533	460	383	328	---	---	---	---
				BHP	0.05	0.05	0.06	0.07	0.07	0.08	---	---	---	---
				Low Stage Heat Rise ºF (ºC)	41 (23)	46 (25)	54 (30)	NA	NA	NA	NA	NA	NA	NA
				High Stage Heat Rise ºF (ºC)	NA	NA	NA	NA	NA	NA	NA	NA	NA	NA
		Med-Low[1]	Pink	CFM	1076	1026	972	918	872	827	771	714	666	611
				BHP	0.13	0.14	0.15	0.15	0.17	0.18	0.18	0.20	0.21	0.22
				Low Stage Heat Rise ºF (ºC)	27 (15)	28 (15)	29 (16)	31 (17)	33 (18)	35 (19)	37 (21)	40 (22)	43 (24)	47 (26)
				High Stage Heat Rise ºF (ºC)	41 (23)	43 (24)	46 (25)	48 (27)	51 (28)	54 (30)	NA	NA	NA	NA
		Medium[4]	Red	CFM	1213	1169	1110	1065	1016	964	923	878	820	777
				BHP	0.16	0.17	0.17	0.19	0.20	0.21	0.22	0.23	0.24	0.25
				Low Stage Heat Rise ºF (ºC)	NA	NA	26 (14)	27 (15)	28 (16)	30 (16)	31 (17)	33 (18)	35 (19)	37 (20)
				High Stage Heat Rise ºF (ºC)	37 (20)	38 (21)	40 (22)	42 (23)	44 (24)	46 (26)	48 (27)	51 (28)	54 (30)	NA
		Med-High[2]	Orange	CFM	1451	1415	1372	1327	1287	1249	1212	1168	1130	1094
				BHP	0.29	0.30	0.31	0.32	248.5 9	0.35	0.36	0.37	0.38	0.39
				Low Stage Heat Rise ºF (ºC)	NA	NA	NA	NA	NA	NA	NA	NA	25 (14)	26 (15)
				High Stage Heat Rise ºF (ºC)	31 (17)	31 (17)	32 (18)	34 (18)	35 (19)	36 (20)	37 (20)	38 (21)	39 (22)	41 (23)
		High	Black	CFM	1633	1590	1552	1518	1483	1444	1406	1372	1340	1303
				BHP	0.41	0.43	0.44	0.45	0.47	0.48	0.49	0.50	0.51	0.53
				Low Stage Heat Rise ºF (ºC)	NA	NA	NA	NA	NA	NA	NA	NA	NA	NA
				High Stage Heat Rise ºF (ºC)	27 (15)	28 (16)	29 (16)	29 (16)	30 (17)	31 (17)	32 (18)	32 (18)	33 (18)	34 (19)

UNIT PGR5	HEATING RISE RANGE	MOTOR SPEED	WIRE COLOR		EXTERNAL STATIC PRESSURE (IN. W.C.)									
					0.1	0.2	0.3	0.4	0.5	0.6	0.7	0.8	0.9	1
42090	35 - 65ºF Low Stage, 35 - 65ºF High Stage	Low[3]	Blue	CFM	1097	971	823	747	669	636	558	513	456	412
				BHP	0.12	0.11	0.10	0.11	0.12	0.13	0.13	0.14	0.15	0.16
				Low Stage Heat Rise ºF (ºC)	39 (22)	44 (25)	52 (29)	58 (32)	64 (36)	NA	NA	NA	NA	NA
				High Stage Heat Rise ºF (ºC)	61 (34)	NA	NA	NA	NA	NA	NA	NA	NA	NA
		Med-Low[1]	Pink	CFM	1076	1026	972	918	872	827	771	714	666	611
				BHP	0.13	0.14	0.15	0.15	0.17	0.18	0.18	0.20	0.21	0.22
				Low Stage Heat Rise ºF (ºC)	40 (22)	42 (23)	44 (25)	47 (26)	49 (27)	52 (29)	56 (31)	60 (33)	64 (36)	NA
				High Stage Heat Rise ºF (ºC)	63 (35)	NA	NA	NA	NA	NA	NA	NA	NA	NA
		Medium	Red	CFM	1251	1198	1149	1104	1066	1017	970	932	892	839
				BHP	0.19	0.21	0.21	0.23	0.24	0.25	0.26	0.27	0.28	0.29
				Low Stage Heat Rise ºF (ºC)	NA	36 (20)	37 (21)	39 (22)	40 (22)	42 (23)	44 (25)	46 (26)	48 (27)	51 (28)
				High Stage Heat Rise ºF (ºC)	54 (30)	56 (31)	59 (33)	61 (34)	63 (35)	NA	NA	NA	NA	NA
		Med-High[2]	Orange	CFM	1451	1415	1372	1327	1287	1249	1212	1168	1130	1094
				BHP	0.29	0.30	0.31	0.32	248.5 9	0.35	0.36	0.37	0.38	0.39
				Low Stage Heat Rise ºF (ºC)	NA	NA	NA	NA	NA	NA	35 (20)	37 (20)	38 (21)	39 (22)
				High Stage Heat Rise ºF (ºC)	46 (26)	48 (26)	49 (27)	51 (28)	52 (29)	54 (30)	56 (31)	58 (32)	60 (33)	62 (34)
		High[4]	Black	CFM	1633	1590	1552	1518	1483	1444	1406	1372	1340	1303
				BHP	0.41	0.43	0.44	0.45	0.47	0.48	0.49	0.50	0.51	0.53
				Low Stage Heat Rise ºF (ºC)	NA	NA	NA	NA	NA	NA	NA	NA	NA	NA
				High Stage Heat Rise ºF (ºC)	41 (23)	42 (24)	43 (24)	44 (25)	45 (25)	47 (26)	48 (27)	49 (27)	50 (28)	52 (29)

See notes on page 10.

UNIT AIRFLOW – DRY COIL AIR DELIVERY* – HORIZONTAL AND DOWNFLOW DISCHARGE

UNIT PGR5	HEATING RISE RANGE	MOTOR SPEED	WIRE COLOR		EXTERNAL STATIC PRESSURE (IN. W.C.)									
					0.1	0.2	0.3	0.4	0.5	0.6	0.7	0.8	0.9	1
48090	35 - 65ºF Low Stage 35 - 65ºF High Stage	Low[3]	Blue	CFM	1067	904	703	587	501	449	380	340	---	---
				BHP	0.12	0.10	0.09	0.09	0.09	0.10	0.11	0.12	---	---
				Low Stage Heat Rise ºF (ºC)	40 (22)	48 (26)	61 (34)	NA	NA	NA	NA	NA	NA	NA
				High Stage Heat Rise ºF (ºC)	63 (35)	NA	NA	NA	NA	NA	NA	NA	NA	NA
		Med-Low[1]	Pink	CFM	1271	1229	1177	1121	1066	1027	974	942	887	839
				BHP	0.19	0.20	0.21	0.23	0.24	0.25	0.26	0.27	0.28	0.29
				Low Stage Heat Rise ºF (ºC)	NA	35 (19)	36 (20)	38 (21)	40 (22)	42 (23)	44 (25)	46 (25)	48 (27)	51 (28)
				High Stage Heat Rise ºF (ºC)	53 (29)	55 (30)	57 (32)	60 (33)	63 (35)	NA	NA	NA	NA	NA
		Medium[4]	Red	CFM	1340	1299	1240	1191	1139	1091	1050	1001	952	895
				BHP	0.22	0.23	0.24	0.25	0.26	0.28	0.29	0.30	0.31	0.32
				Low Stage Heat Rise ºF (ºC)	NA	NA	35 (19)	36 (20)	38 (21)	39 (22)	41 (23)	43 (24)	45 (25)	48 (27)
				High Stage Heat Rise ºF (ºC)	50 (28)	52 (29)	54 (30)	57 (31)	59 (33)	62 (34)	64 (36)	NA	NA	NA
		Med-High[2]	Orange	CFM	1686	1650	1617	1576	1544	1503	1468	1433	1393	1356
				BHP	0.42	0.44	0.45	0.46	0.48	0.49	0.51	0.52	0.53	0.55
				Low Stage Heat Rise ºF (ºC)	NA	NA	NA	NA	NA	NA	NA	NA	NA	NA
				High Stage Heat Rise ºF (ºC)	40 (22)	41 (23)	42 (23)	43 (24)	44 (24)	45 (25)	46 (26)	47 (26)	48 (27)	50 (28)
		High	Black	CFM	1854	1837	1781	1784	1720	1698	1655	1625	1578	1532
				BHP	0.56	0.57	0.60	0.59	0.62	0.63	0.64	0.66	0.67	0.67
				Low Stage Heat Rise ºF (ºC)	NA	NA	NA	NA	NA	NA	NA	NA	NA	NA
				High Stage Heat Rise ºF (ºC)	36 (20)	37 (20)	38 (21)	38 (21)	39 (22)	40 (22)	41 (23)	41 (23)	43 (24)	44 (24)

UNIT PGR5	HEATING RISE RANGE	MOTOR SPEED	WIRE COLOR		EXTERNAL STATIC PRESSURE (IN. W.C.)									
					0.1	0.2	0.3	0.4	0.5	0.6	0.7	0.8	0.9	1
48115	30 - 60ºF Low Stage 30 - 60ºF High Stage	Low[1]	Blue	CFM	1271	1229	1177	1121	1066	1027	974	942	887	839
				BHP	0.19	0.20	0.21	0.23	0.24	0.25	0.26	0.27	0.28	0.29
				Low Stage Heat Rise ºF (ºC)	44 (24)	45 (25)	47 (26)	50 (28)	52 (29)	54 (30)	57 (32)	59 (33)	NA	NA
				High Stage Heat Rise ºF (ºC)	NA	NA	NA	NA	NA	NA	NA	NA	NA	NA
		Med-Low[3]	Pink	CFM	1340	1299	1240	1191	1139	1091	1050	1001	952	895
				BHP	0.22	0.23	0.24	0.25	0.26	0.28	0.29	0.30	0.31	0.32
				Low Stage Heat Rise ºF (ºC)	42 (23)	43 (24)	45 (25)	47 (26)	49 (27)	51 (28)	53 (30)	56 (31)	59 (33)	NA
				High Stage Heat Rise ºF (ºC)	NA	NA	NA	NA	NA	NA	NA	NA	NA	NA
		Medium[2]	Red	CFM	1686	1650	1617	1576	1544	1503	1468	1433	1393	1356
				BHP	0.42	0.44	0.45	0.46	0.48	0.49	0.51	0.52	0.53	0.55
				Low Stage Heat Rise ºF (ºC)	33 (18)	34 (19)	35 (19)	35 (20)	36 (20)	37 (21)	38 (21)	39 (22)	40 (22)	41 (23)
				High Stage Heat Rise ºF (ºC)	52 (29)	53 (29)	54 (30)	55 (31)	56 (31)	58 (32)	59 (33)	NA	NA	NA
		Med-High	Orange	CFM	1854	1837	1781	1784	1720	1698	1655	1625	1578	1532
				BHP	0.56	0.57	0.60	0.59	0.62	0.63	0.64	0.66	0.67	0.67
				Low Stage Heat Rise ºF (ºC)	30 (17)	30 (17)	31 (17)	31 (17)	32 (18)	33 (18)	34 (19)	34 (19)	35 (20)	36 (20)
				High Stage Heat Rise ºF (ºC)	47 (26)	47 (26)	49 (27)	49 (27)	51 (28)	51 (28)	53 (29)	53 (30)	55 (31)	57 (32)
		High[4]	Black	CFM	1934	1900	1855	1815	1778	1737	1695	1656	1606	1528
				BHP	0.59	0.61	0.62	0.64	0.65	0.67	0.68	0.70	0.70	0.68
				Low Stage Heat Rise ºF (ºC)	NA	NA	30 (17)	31 (17)	31 (17)	32 (18)	33 (18)	34 (19)	35 (19)	37 (20)
				High Stage Heat Rise ºF (ºC)	45 (25)	46 (25)	47 (26)	48 (27)	49 (27)	50 (28)	51 (28)	52 (29)	54 (30)	57 (32)

See notes on page 10.

UNIT AIRFLOW – DRY COIL AIR DELIVERY* – HORIZONTAL AND DOWNFLOW DISCHARGE

UNIT PGR5	HEATING RISE RANGE	MOTOR SPEED	WIRE COLOR		EXTERNAL STATIC PRESSURE (IN. W.C.)									
					0.1	0.2	0.3	0.4	0.5	0.6	0.7	0.8	0.9	1
48130	35 - 65ºF Low Stage 35 - 65ºF High Stage	Low[1]	Blue	CFM	1271	1229	1177	1121	1066	1027	974	942	887	839
				BHP	0.19	0.20	0.21	0.23	0.24	0.25	0.26	0.27	0.28	0.29
				Low Stage Heat Rise ºF (ºC)	49 (27)	51 (28)	53 (30)	56 (31)	59 (33)	61 (34)	64 (36)	NA	NA	NA
				High Stage Heat Rise ºF (ºC)	NA	NA	NA	NA	NA	NA	NA	NA	NA	NA
		Med-Low[3]	Pink	CFM	1340	1299	1240	1191	1139	1091	1050	1001	952	895
				BHP	0.22	0.23	0.24	0.25	0.26	0.28	0.29	0.30	0.31	0.32
				Low Stage Heat Rise ºF (ºC)	47 (26)	48 (27)	51 (28)	53 (29)	55 (31)	57 (32)	60 (33)	63 (35)	NA	NA
				High Stage Heat Rise ºF (ºC)	NA	NA	NA	NA	NA	NA	NA	NA	NA	NA
		Medium[2]	Red	CFM	1686	1650	1617	1576	1544	1503	1468	1433	1393	1356
				BHP	0.42	0.44	0.45	0.46	0.48	0.49	0.51	0.52	0.53	0.55
				Low Stage Heat Rise ºF (ºC)	37 (21)	38 (21)	39 (22)	40 (22)	41 (23)	42 (23)	43 (24)	44 (24)	45 (25)	46 (26)
				High Stage Heat Rise ºF (ºC)	57 (32)	58 (32)	59 (33)	61 (34)	62 (35)	64 (35)	65(36)	NA	NA	NA
		Med-High	Orange	CFM	1854	1837	1781	1784	1720	1698	1655	1625	1578	1532
				BHP	0.56	0.57	0.60	0.59	0.62	0.63	0.64	0.66	0.67	0.67
				Low Stage Heat Rise ºF (ºC)	NA	NA	35 (20)	35 (20)	36 (20)	37 (20)	38 (21)	39 (21)	40 (22)	41 (23)
				High Stage Heat Rise ºF (ºC)	52 (29)	52 (29)	54 (30)	54 (30)	56 (31)	56 (31)	58 (32)	59 (33)	61 (34)	63 (35)
		High[4]	Black	CFM	1934	1900	1855	1815	1778	1737	1695	1656	1606	1528
				BHP	0.59	0.61	0.62	0.64	0.65	0.67	0.68	0.70	0.70	0.68
				Low Stage Heat Rise ºF (ºC)	NA	NA	NA	35 (19)	35 (20)	36 (20)	37 (21)	38 (21)	39 (22)	41 (23)
				High Stage Heat Rise ºF (ºC)	50 (28)	50 (28)	52 (29)	53 (29)	54 (30)	55 (31)	57 (31)	58 (32)	60 (33)	63 (35)

UNIT PGR5	HEATING RISE RANGE	MOTOR SPEED	WIRE COLOR		EXTERNAL STATIC PRESSURE (IN. W.C.)									
					0.1	0.2	0.3	0.4	0.5	0.6	0.7	0.8	0.9	1
60090	35 - 65ºF Low Stage 35 - 65ºF High Stage	Low[3]	Blue	CFM	1067	904	703	587	501	449	380	340	---	---
				BHP	0.12	0.10	0.09	0.09	0.09	0.10	0.11	0.12	---	---
				Low Stage Heat Rise ºF (ºC)	40 (22)	48 (26)	61 (34)	NA	NA	NA	NA	NA	NA	NA
				High Stage Heat Rise ºF (ºC)	63 (35)	NA	NA	NA	NA	NA	NA	NA	NA	NA
		Med-Low[1]	Pink	CFM	1271	1229	1177	1121	1066	1027	974	942	887	839
				BHP	0.19	0.20	0.21	0.23	0.24	0.25	0.26	0.27	0.28	0.29
				Low Stage Heat Rise ºF (ºC)	NA	35 (19)	36 (20)	38 (21)	40 (22)	42 (23)	44 (25)	46 (25)	48 (27)	51 (28)
				High Stage Heat Rise ºF (ºC)	53 (29)	55 (30)	57 (32)	60 (33)	63 (35)	NA	NA	NA	NA	NA
		Medium[4]	Red	CFM	1340	1299	1240	1191	1139	1091	1050	1001	952	895
				BHP	0.22	0.23	0.24	0.25	0.26	0.28	0.29	0.30	0.31	0.32
				Low Stage Heat Rise ºF (ºC)	NA	NA	35 (19)	36 (20)	38 (21)	39 (22)	41 (23)	43 (24)	45 (25)	48 (27)
				High Stage Heat Rise ºF (ºC)	50 (28)	52 (29)	54 (30)	57 (31)	59 (33)	62 (34)	64 (36)	NA	NA	NA
		Med-High[2]	Orange	CFM	1878	1844	1805	1762	1731	1693	1655	1616	1570	1532
				BHP	0.50	0.52	0.53	0.54	0.56	0.57	0.59	0.60	0.64	0.63
				Low Stage Heat Rise ºF (ºC)	NA	NA	NA	NA	NA	NA	NA	NA	NA	NA
				High Stage Heat Rise ºF (ºC)	36 (20)	37 (20)	37 (21)	38 (21)	39 (22)	40 (22)	41 (23)	42 (23)	43 (24)	44 (24)
		High	Black	CFM	2020	1990	1956	1912	1872	1842	1802	1760	1719	1643
				BHP	0.62	0.63	0.66	0.67	0.69	0.70	0.71	0.73	0.74	0.72
				Low Stage Heat Rise ºF (ºC)	NA	NA	NA	NA	NA	NA	NA	NA	NA	NA
				High Stage Heat Rise ºF (ºC)	NA	NA	NA	35 (20)	36 (20)	37 (20)	37 (21)	38 (21)	39 (22)	41 (23)

See notes on page 10.

UNIT AIRFLOW – DRY COIL AIR DELIVERY* – HORIZONTAL AND DOWNFLOW DISCHARGE

UNIT PGR5	HEATING RISE RANGE	MOTOR SPEED	WIRE COLOR		EXTERNAL STATIC PRESSURE (IN. W.C.)									
					0.1	0.2	0.3	0.4	0.5	0.6	0.7	0.8	0.9	1
60115	30 - 60ºF Low Stage 30 - 60ºF High Stage	Low[1]	Blue	CFM	1271	1229	1177	1121	1066	1027	974	942	887	839
				BHP	0.19	0.20	0.21	0.23	0.24	0.25	0.26	0.27	0.28	0.29
				Low Stage Heat Rise ºF (ºC)	44 (24)	45 (25)	47 (26)	50 (28)	52 (29)	54 (30)	57 (32)	59 (33)	NA	NA
				High Stage Heat Rise ºF (ºC)	NA	NA	NA	NA	NA	NA	NA	NA	NA	NA
		Med-Low[3]	Pink	CFM	1340	1299	1240	1191	1139	1091	1050	1001	952	895
				BHP	0.22	0.23	0.24	0.25	0.26	0.28	0.29	0.30	0.31	0.32
				Low Stage Heat Rise ºF (ºC)	42 (23)	43 (24)	45 (25)	47 (26)	49 (27)	51 (28)	53 (30)	56 (31)	59 (33)	NA
				High Stage Heat Rise ºF (ºC)	NA	NA	NA	NA	NA	NA	NA	NA	NA	NA
		Medium	Red	CFM	1686	1650	1617	1576	1544	1503	1468	1433	1393	1356
				BHP	0.42	0.44	0.45	0.46	0.48	0.49	0.51	0.52	0.53	0.55
				Low Stage Heat Rise ºF (ºC)	33 (18)	34 (19)	35 (19)	35 (20)	36 (20)	37 (21)	38 (21)	39 (22)	40 (22)	41 (23)
				High Stage Heat Rise ºF (ºC)	52 (29)	53 (29)	54 (30)	55 (31)	56 (31)	58 (32)	59 (33)	NA	NA	NA
		Med-High[2]	Orange	CFM	1878	1844	1805	1762	1731	1693	1655	1616	1570	1532
				BHP	0.50	0.52	0.53	0.54	0.56	0.57	0.59	0.60	0.64	0.63
				Low Stage Heat Rise ºF (ºC)	30 (17)	30 (17)	31 (17)	32 (18)	32 (18)	33 (18)	34 (19)	35 (19)	36 (20)	36 (20)
				High Stage Heat Rise ºF (ºC)	46 (26)	47 (26)	48 (27)	49 (27)	50 (28)	51 (29)	53 (29)	54 (30)	55 (31)	57 (32)
		High[4]	Black	CFM	1934	1900	1855	1815	1778	1737	1695	1656	1606	1528
				BHP	0.59	0.61	0.62	0.64	0.65	0.67	0.68	0.70	0.70	0.68
				Low Stage Heat Rise ºF (ºC)	NA	NA	30 (17)	31 (17)	31 (17)	32 (18)	33 (18)	34 (19)	35 (19)	37 (20)
				High Stage Heat Rise ºF (ºC)	45 (25)	46 (25)	47 (26)	48 (27)	49 (27)	50 (28)	51 (28)	52 (29)	54 (30)	57 (32)

UNIT PGR5	HEATING RISE RANGE	MOTOR SPEED	WIRE COLOR		EXTERNAL STATIC PRESSURE (IN. W.C.)									
					0.1	0.2	0.3	0.4	0.5	0.6	0.7	0.8	0.9	1
60130	35 - 65ºF Low Stage 35 - 65ºF High Stage	Low[1]	Blue	CFM	1271	1229	1177	1121	1066	1027	974	942	887	839
				BHP	0.19	0.20	0.21	0.23	0.24	0.25	0.26	0.27	0.28	0.29
				Low Stage Heat Rise ºF (ºC)	49 (27)	51 (28)	53 (30)	56 (31)	59 (33)	61 (34)	64 (36)	NA	NA	NA
				High Stage Heat Rise ºF (ºC)	NA	NA	NA	NA	NA	NA	NA	NA	NA	NA
		Med-Low[3]	Pink	CFM	1340	1299	1240	1191	1139	1091	1050	1001	952	895
				BHP	0.22	0.23	0.24	0.25	0.26	0.28	0.29	0.30	0.31	0.32
				Low Stage Heat Rise ºF (ºC)	47 (26)	48 (27)	51 (28)	53 (29)	55 (31)	57 (32)	60 (33)	63 (35)	NA	NA
				High Stage Heat Rise ºF (ºC)	NA	NA	NA	NA	NA	NA	NA	NA	NA	NA
		Medium	Red	CFM	1686	1650	1617	1576	1544	1503	1468	1433	1393	1356
				BHP	0.42	0.44	0.45	0.46	0.48	0.49	0.51	0.52	0.53	0.55
				Low Stage Heat Rise ºF (ºC)	37 (21)	38 (21)	39 (22)	40 (22)	41 (23)	42 (23)	43 (24)	44 (24)	45 (25)	46 (26)
				High Stage Heat Rise ºF (ºC)	57 (32)	58 (32)	59 (33)	61 (34)	62 (35)	64 (35)	65 (36)	NA	NA	NA
		Med-High[2]	Orange	CFM	1878	1844	1805	1762	1731	1693	1655	1616	1570	1532
				BHP	0.50	0.52	0.53	0.54	0.56	0.57	0.59	0.60	0.64	0.63
				Low Stage Heat Rise ºF (ºC)	NA	NA	35 (19)	36 (20)	36 (20)	37 (21)	38 (21)	39 (22)	40 (22)	41 (23)
				High Stage Heat Rise ºF (ºC)	51 (28)	52 (29)	53 (30)	54 (30)	55 (31)	57 (31)	58 (32)	59 (33)	61 (34)	63 (35)
		High[4]	Black	CFM	1934	1900	1855	1815	1778	1737	1695	1656	1606	1528
				BHP	0.59	0.61	0.62	0.64	0.65	0.67	0.68	0.70	0.70	0.68
				Low Stage Heat Rise ºF (ºC)	NA	NA	NA	35 (19)	35 (20)	36 (20)	37 (21)	38 (21)	39 (22)	41 (23)
				High Stage Heat Rise ºF (ºC)	50 (28)	50 (28)	52 (29)	53 (29)	54 (30)	55 (31)	57 (31)	58 (32)	60 (33)	63 (35)

Notes:

[1] Factory-shipped low stage cooling speed

[2] Factory-shipped high stage cooling speed

[3] Factory-shipped low stage gas heating speed

[4] Factory-shipped high stage gas heating speed

Allowable High Stage Enhanced Dehumidification Cooling Speed

"NA" = Not allowed for particular heating speed

WET COIL PRESSURE DROP (IN. W.C.)

Unit Size	STANDARD CFM (SCFM)																
	600	700	800	900	1000	1100	1200	1300	1400	1500	1600	1700	1800	1900	2000	2100	2200
24	0.03	0.04	0.04	0.05	0.06												
30				0.05	0.06	0.07	0.08	0.11									
36				0.06	0.06	0.09	0.10	0.11	0.14								
42					0.05	0.05	0.06	0.07	0.08	0.08	0.09	0.09	0.11				
48							0.04	0.06	0.09	0.10	0.10	0.11	0.12	0.13	0.14		
60										0.06	0.07	0.01	0.08	0.09	0.10	0.12	0.13

ECONOMIZER WITH 1–IN. FILTER PRESSURE DROP (IN. W.C.)

FILTER SIZE IN. (MM)	CLG TONS	STANDARD CFM (SCFM)																
		600	700	800	900	1000	1100	1200	1300	1400	1500	1600	1700	1800	1900	2000	2100	2200
600-1400 CFM 12x20x1+12x20x1 (305x508x25+305x508x25)	2.0 2.5	–	–	0.08	0.09	0.10	0.11	0.11	0.13	0.14	–	–	–	–	–	–	–	–
1200-1800 CFM 16x24x1+14x24x1 (406x610x25+356x610x25)	3.0 3.5 4.0	–	–	–	–	–	0.09	0.09	0.10	0.12	0.13	0.15	0.17	0.17	0.19	0.21	–	–
1500-2200 CFM 16x24x1+18x24x1 (406x610x25+457x356x25)	5.0	–	–	–	–	–	–	–	–	–	0.15	0.17	0.18	0.20	0.21	0.22	0.23	0.23

FILTER PRESSURE DROP (IN. W.C.)

FILTER SIZE IN. (MM)	CLG TONS	STANDARD CFM (SCFM)																
		600	700	800	900	1000	1100	1200	1300	1400	1500	1600	1700	1800	1900	2000	2100	2200
		Pressure Drop (inches water column)																
600-1400 CFM 12x20x1+12x20x1 (305x508x25+305x508x25)	2.0 2.5	0.03	0.04	0.05	0.06	0.06	0.07	0.07	0.08	0.08	–	–	–	–	–	–	–	–
1200-1800 CFM 16x24x1+14x24x1 (406x610x25+356x610x25)	3.0 3.5 4.0	–	–	–	–	0.04	0.05	0.06	0.07	0.08	0.09	0.09	0.10	0.11	0.12	0.12	–	–
1500-2200 CFM 16x24x1+18x24x1 (406x610x25+457x356x25)	5.0	–	–	–	–	–	–	–	–	–	0.04	0.06	0.08	0.10	0.11	0.13	0.14	0.15

NATURAL GAS ORIFICE SIZES AND MANIFOLD PRESSURE

Nameplate Input, High Stage (Btu/hr)		ALTITUDE OF INSTALLATION (FT. [m] ABOVE SEA LEVEL) U.S.A.*				
		0 to 2000 [0 to 610]	2001 to 3000* [610 to 914]	3001 to 4000 [915 to 1219]	4001 to 5000 [1220 to 1524]	5001 to 6000 [1524 to 1829]
40000	Orifice No. (Qty)	44 (2)	45 (2)†	48 (2)†	48 (2)†	48 (2)†
	Manifold Press. High / Low (in. w.c.)	3.2 /1.4	3.2 /1.4	3.8 /1.6	3.5 /1.5	3.2 /1.4
60000	Orifice No. (Qty)	44 (3)	45 (3)†	48 (3)†	48 (3)†	48 (3)†
	Manifold Press. High / Low (in. w.c.)	3.2 /1.4	3.2 /1.4	3.8 /1.6	3.5 /1.5	3.2 /1.4
90000	Orifice No. (Qty)	38 (3)	41 (3)†	41 (3)†	42 (3)†	42 (3)†
	Manifold Press. High / Low (in. w.c.)	3.6 /1.6	3.8 /1.6	3.4 /1.5	3.4 /1.5	3.2 /1.4
115000	Orifice No. (Qty)	33 (3)	36 (3)†	36 (3)†	36 (3)†	38 (3)†
	Manifold Press. High / Low (in. w.c.)	3.8 /1.7	3.8 /1.7	3.6 /1.6	3.3 /1.4	3.6 /1.5
130000	Orifice No. (Qty)	31 (3)	31 (3)	33 (3)†	33 (3)†	34 (3)†
	Manifold Press. High / Low (in. w.c.)	3.8 /1.7	3.2 /1.4	3.7 /1.6	3.4 /1.4	3.3 /1.4

PROPANE GAS ORIFICE SIZES AND MANIFOLD PRESSURE

Nameplate Input, High Stage (Btu/hr)		ALTITUDE OF INSTALLATION (FT. ABOVE SEA LEVEL) U.S.A.*†				
		0 to 2000 [0 to 610]	2001 to 3000* [610 to 914]	3001 to 4000 [915 to 1219]	4001 to 5000 [1220 to 1524]	5001 to 6000 [1524 to 1829]
40000	Orifice No. (Qty)	55 (2)	56 (2)	56 (2)	56 (2)	56 (2)
	Manifold Press. High / Low (in. w.c.)	10.0/5.0	11.0/6.0	11.0/5.5	11.0/5.0	10.7/4.8
60000	Orifice No. (Qty)	55 (3)	56 (3)	56 (3)	56 (3)	56 (3)
	Manifold Press. High / Low (in. w.c.)	10.0/5.0	11.0/6.0	11.0/5.5	11.0/5.0	10.7/4.8
90000	Orifice No. (Qty)	53 (3)	54 (3)	54 (3)	54 (3)	54 (3)
	Manifold Press. High / Low (in. w.c.)	10.0/5.4	11.0/6.4	11.0/5.9	11.0/5.4	11.0/5.0
115000	Orifice No. (Qty)	51 (3)	52 (3)	52 (3)	53 (3)	53 (3)
	Manifold Press. High / Low (in. w.c.)	10.0/5.4	11.0/5.0	10.6/4.8	11.0/6.1	11.0/5.5
130000	Orifice No. (Qty)	49 (3)	50 (3)	51 (3)	52 (3)	52 (3)
	Manifold Press. High / Low (in. w.c.)	10.0/5.4	11.0/4.8	11.0/4.9	11.0/5.2	11.0/5.0

*In the U.S.A., the input rating for altitudes above 2000 ft (610m) must be reduced by 4% for each 1000 ft (305 m) above sea level.
In Canada, the input rating for altitudes from 2001 to 4500 ft (611 to 1372 m) above sea level must be derated by 10% by an authorized gas conversion station or dealer.
For Canadian Installations from 2000 to 4500 ft, use U.S.A. column 2001 to 3000 ft (610 to 914 m).

† Use Kit No. NPLPCONV013B00 (0–2000 ft [0–610 m] above sea level. Use Kit No. NPLPCONV014B00 (2001–6000 ft [611–1829 m] above sea level.

HIGH ALTITUDE COMPENSATION: NATURAL GAS

Nameplate Input, High Stage (Btu/hr)	Rated Heating Input (Btu/hr), Natural Gas at Installation Altitude Above Sea Level, U.S.A.*									
	0 to 2000 ft 0 to 610 m		2001 to 3000 ft* 610 to 914 m		3001 to 4000 ft 915 to 1219 m		4001 to 5000 ft 1220 to 1524 m		5001 to 6000 ft 1524 to 1829 m	
	High Stage	Low Stage	High Stage	Low Stage	High Stage	Low Stage	High Stage	Low Stage	High Stage	Low Stage
40000	40000	26000	36000	23400	34400	22300	32800	21300	31200	20300
60000	60000	39000	54000	35100	51600	33500	49200	32000	46800	30400
90000	90000	58500	81000	52700	77400	50300	73800	48000	70200	45600
115000	115000	75000	103500	67500	98900	64500	94300	61500	89700	58500
130000	130000	84500	117000	76100	111800	72700	106600	69300	101400	65900

HIGH ALTITUDE COMPENSATION: PROPANE GAS

Nameplate Input, High Stage (Btu/hr)	Rated Heating Input (Btu/hr), LP Gas at Installation Altitude Above Sea Level, U.S.A.*									
	0 to 2000 ft 0 to 610 m		2001 to 3000 ft* 610 to 914 m		3001 to 4000 ft 915 to 1219 m		4001 to 5000 ft 1220 to 1524 m		5001 to 6000 ft 1524 to 1829 m	
	High Stage	Low Stage	High Stage	Low Stage	High Stage	Low Stage	High Stage	Low Stage	High Stage	Low Stage
40000	38000	26000	31700	23400	31700	22300	31700	21300	31200	20300
60000	57000	39000	47500	35100	47500	33500	47500	32000	46800	30400
90000	79000	58500	68900	52700	68900	50300	68600	48000	68600	45600
115000	103000	75000	100400	67500	98900	64500	83000	61500	83000	58500
130000	116000	84500	115500	76100	111800	72700	101300	69300	100400	65900

*In the U.S.A., the input rating for altitudes above 2000 ft (610m) must be reduced by 4% for each 1000 ft (305 m) above sea level.
In Canada, the input rating for altitudes from 2001 to 4500 ft (611 to 1372 m) above sea level must be derated by 10% by an authorized gas conversion station or dealer.
For Canadian Installations from 2000 to 4500 ft (610−1372 m), use U.S.A. column 2001 to 3000 ft (611 to 914 m).

HEATING CAPACITIES AND EFFICIENCIES

UNIT	HEATING INPUT (BTUH) HIGH/LOW	OUTPUT CAPACITY (BTUH) HIGH / LOW	TEMPERATURE RISE RANGE HIGH °F (°C)	TEMPERATURE RISE RANGE LOW °F (°C)	AFUE (%)
24040 30040	40,000 / 26,000	32,000 / 21,000	20–50 (11–28)	15–45 (8–25)	78
24060 30060 36060 42060	60,000 / 39,000	49,000 / 31,000	25–55 (14–31)	25–55 (14–31)	78.6
36090 42090 48090 60090	90,000 / 58,500	74,000 / 47,000	35–65 (19–36)	35–65 (19–36)	79.2
48115 60115	115,000 / 75,000	93,000 / 61,000	30–60 (17–33)	30–60 (17–33)	80.1
48130 60130	130,000 / 84,500	103,000 / 68,000	35–65 (19–36)	35–65 (19–36)	80.0

LEGEND
AFUE – Annual Fuel Utilization Efficiency
NOTE: Before purchasing this appliance, read important energy cost and efficiency information available from AHRI directory.org.

UNIT ELECTRICAL SPECIFICATIONS

UNIT	NOMINAL	VOLTAGE RANGE		COMPRESSOR		OFM	IFM	IDM	POWER SUPPLY	
		MIN	MAX	RLA	LRA	FLA	FLA	FLA	MCA	MOCP
24040 / 24060	208/230-1-60	197	253	11.7	58.3	0.7	4.1	.21	19.4	30
30040 / 30060	208/230-1-60	197	253	13.1	73.0	1.2	4.1	.21	21.7	30
30040 / 30060	208/230-3-60	197	253	8.7	58.0	1.2	4.1	.21	16.2	20
36060 / 36090	208/230-1-60	197	253	15.3	83.0	1.2	6.0	.21	26.3	40
36060 / 36090	208/230-3-60	197	253	11.6	73.0	1.2	6.0	.21	21.7	30
42060 / 42090	208/230-1-60	197	253	17.9	96.0	1.2	6.0	.21	29.6	45
42060 / 42090	208/230-3-60	197	253	14.2	88.0	1.2	6.0	.21	25.0	35
48090	208/230-1-60	197	253	21.2	104.0	1.2	7.6	.21	35.3	50
48115	208/230-1-60	197	253	21.2	104.0	1.2	7.6	.50	35.3	50
48130								.50		
48090	208/230-3-60	197	253	14.0	83.1	1.2	7.6	.21	26.3	40
48115								.50		
48130								.50		
60090	208/230-1-60	197	253	28.8	152.9	1.2	7.6	.21	44.8	60
60115								.50		
60130								.50		
60090	208/230-3-60	197	253	16.2	110.0	1.2	7.6	.21	29.1	40
60115								.50		
60130								.50		

LEGEND

FLA - Full Load Amps
IDM - Inducer Motor
IFM - Indoor Fan Motor
LRA -Locked Rotor Amps
MCA - Minimum Circuit Amps
MOCP - Maximum Over Current Protection
OFM - Outdoor Fan Motor
RLA - Rated Load Amps

NOTES:

1. In compliance with NEC (National Electrical Code) requirements for multimotor and combination load equipment (refer to NEC Articles 430 and 440), the overcurrent protective device for the unit shall be Power Supply fuse or circuit breaker.
2. Minimum wire size is based on 60 C copper wire. If other than 60 C wire is used, or if length exceeds wire length in table, determine size from NEC.
3. Unbalanced 3-Phase Supply Voltage
   Never operate a motor where a phase imbalance in supply voltage is greater than 2%. Use the following formula to determine the percentage of voltage imbalance

   % Voltage imbalance

   $$= 100 \times \frac{\text{max voltage deviation from average voltage}}{\text{average voltage}}$$

EXAMPLE: Supply voltage is 230-3-60.

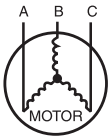

AB = 228 v
BC = 231 v
AC = 227 v

$$\text{Average Voltage} = \frac{228 + 231 + 227}{3} = \frac{686}{3} = 229$$

Determine maximum deviation from average voltage.
(AB) 229 - 228 = 1 v
(BC) 231 - 229 = 2 v
(AC) 229 - 227 = 2 v

Maximum deviation is 2 v.

Determine percent of voltage imbalance

$$\% \text{ Voltage Imbalance} = 100 \times \frac{2}{229} = 0.8\%$$

This amount of phase imbalance is satisfactory as it is below the maximum allowable 2%.

IMPORTANT: If the supply voltage phase imbalance is more than 2%, contact your local electric utility company immediately.

A06564

AHRI* CAPACITIES

COOLING CAPACITIES AND EFFICIENCIES					
Unit	**Nominal Tons**	**Standard CFM (High / Low Stage)**	**Net Cooling Capacities - Btuh (High Stage)**	**EER @A****	**SEER†**
24	2	800 / 600	23000	12.0	15.0
30	2-1/2	1000 / 750	29000	12.0	15.0
36	3	1200 / 900	35400	12.5	16.0
42	3-1/2	1400 / 1050	42000	12.5	16.0
48	4	1600 / 1200	47500	12.3	16.0
60	5	1750 / 1200	57000	12.3	16.0

LEGEND
dB—Sound Levels (decibels)
db—Dry Bulb
SEER—Seasonal Energy Efficiency Ratio
wb—Wet Bulb
COP—Coefficient of Performance
* Air Conditioning, Heating & Refrigeration Institute.
**At "A" conditions—80°F (26.7°C) indoor db/67°F (19.4°C) indoor wb & 95°F (35°C) outdoor db.
† Rated in accordance with U.S. Government DOE Department of Energy) test procedures and/or AHRI Standards 210/240.

Notes:
1. Ratings are net values, reflecting the effects of circulating fan heat.
Ratings are based on:
Cooling Standard: 80°F (26.7°C) db, 67°F wb (19.4°C) indoor entering—air temperature and 95°F db (35°C) outdoor entering—air temperature.
2. Before purchasing this appliance, read important energy cost and efficiency information available from AHRI directory.org.

PERFORMANCE DATA

PGR524 EXTENDED COOLING PERFORMANCE – LOW COOL

EVAPORATOR AIR		CONDENSER ENTERING AIR TEMPERATURES °F (°C)																	
		75 (23.9)			85 (29.4)			95 (35)			105 (40.6)			115 (46.1)			125 (51.7)		
CFM	EWB	Capacity MBtuh		Total Syst KW	Capacity MBtuh		Total Syst KW	Capacity MBtuh		Total Syst KW	Capacity MBtuh		Total Syst KW	Capacity MBtuh		Total Syst KW	Capacity MBtuh		Total Syst KW
		Total	Sens		Total	Sens		Total	Sens		Total	Sens		Total	Sens		Total	Sens	
525	57(13.8)	17.82	17.82	1.08	16.44	16.44	1.24	15.06	15.06	1.41	13.67	13.67	1.60	12.27	12.27	1.81	10.86	10.86	2.04
	62(16.6)	18.21	16.78	1.07	16.66	15.16	1.24	15.11	15.05	1.41	13.69	13.69	1.60	12.28	12.28	1.81	10.88	10.88	2.04
	63*(17.2)	18.58	13.61	1.07	16.98	12.24	1.23	15.39	10.90	1.41	13.80	9.59	1.60	12.20	8.32	1.82	10.62	7.10	2.05
	67(19.4)	19.95	14.13	1.04	18.24	12.71	1.21	16.54	11.34	1.39	14.83	10.00	1.58	13.13	8.69	1.80	11.44	7.44	2.03
	72(22.2)	21.87	11.42	1.01	20.00	10.22	1.18	18.14	9.05	1.36	16.28	7.92	1.56	14.42	6.82	1.78	12.59	5.78	2.01
600	57(13.8)	18.60	18.60	1.08	17.14	17.14	1.24	15.68	15.68	1.42	14.21	14.21	1.61	12.73	12.73	1.82	11.25	11.25	2.05
	62(16.6)	18.65	18.61	1.08	17.17	17.17	1.24	15.71	15.71	1.42	14.23	14.23	1.61	12.75	12.75	1.82	11.27	11.27	2.05
	63*(17.2)	18.96	14.57	1.08	17.31	13.11	1.24	15.67	11.69	1.42	14.03	10.31	1.61	12.39	8.97	1.83	10.77	7.67	2.06
	67(19.4)	20.34	15.15	1.05	18.58	13.66	1.22	16.82	12.20	1.40	15.06	10.77	1.60	13.31	9.39	1.81	11.59	8.05	2.04
	72(22.2)	22.29	12.08	1.02	20.35	10.81	1.19	18.43	9.59	1.37	16.52	8.40	1.57	14.61	7.26	1.79	12.73	6.17	2.02
675	57(13.8)	19.26	19.26	1.09	17.73	17.73	1.25	16.20	16.20	1.42	14.66	14.66	1.62	13.11	13.11	1.83	11.57	11.57	2.06
	62(16.6)	19.29	19.29	1.09	17.75	17.75	1.25	16.22	16.22	1.42	14.68	14.68	1.62	13.13	13.13	1.83	11.59	11.59	2.06
	63*(17.2)	19.25	15.50	1.09	17.56	13.97	1.25	15.88	12.47	1.43	14.21	11.01	1.63	12.53	9.59	1.84	10.89	8.21	2.07
	67(19.4)	20.64	16.16	1.06	18.83	14.58	1.23	17.03	13.03	1.41	15.24	11.53	1.61	13.45	10.06	1.82	11.70	8.65	2.05
	72(22.2)	22.59	12.71	1.03	20.61	11.39	1.20	18.64	10.12	1.39	16.69	8.88	1.58	14.74	7.68	1.80	12.83	6.55	2.03

PGR524 EXTENDED COOLING PERFORMANCE – HIGH COOL

EVAPORATOR AIR		CONDENSER ENTERING AIR TEMPERATURES °F (°C)																	
		75 (23.9)			85 (29.4)			95 (35)			105 (40.6)			115 (46.1)			125 (51.7)		
CFM	EWB	Capacity MBtuh		Total Sys KW	Capacity MBtuh		Total Sys KW	Capacity MBtuh		Total Sys KW	Capacity MBtuh		Total Sys KW	Capacity MBtuh		Total Sys KW	Capacity MBtuh		Total Sys KW
		Total	Sens		Total	Sens		Total	Sens		Total	Sens		Total	Sens		Total	Sens	
700	57(13.8)	23.89	23.89	1.55	22.22	22.22	1.70	20.54	20.54	1.87	18.86	18.86	2.05	17.17	17.17	2.26	15.50	15.50	2.48
	62(16.6)	24.55	21.58	1.55	22.62	20.64	1.71	20.72	19.69	1.87	18.89	18.89	2.05	17.20	17.20	2.26	15.52	15.52	2.48
	63*(17.2)	25.02	17.56	1.56	23.05	16.72	1.71	21.08	15.86	1.87	19.13	15.01	2.06	17.19	14.15	2.26	15.30	13.30	2.48
	67(19.4)	26.85	18.20	1.57	24.72	17.34	1.73	22.61	16.48	1.89	20.50	15.61	2.07	18.42	14.75	2.27	16.39	13.89	2.49
	72(22.2)	29.38	14.76	1.60	27.04	13.97	1.75	24.71	13.17	1.92	22.42	12.38	2.10	20.14	11.59	2.30	17.91	10.81	2.52
800	57(13.8)	24.94	24.94	1.57	23.16	23.16	1.73	21.38	21.38	1.90	19.59	19.59	2.08	17.81	17.81	2.28	16.04	16.04	2.51
	62(16.6)	25.14	23.30	1.58	23.20	23.20	1.73	21.41	21.41	1.90	19.62	19.62	2.08	17.83	17.83	2.28	16.06	16.06	2.51
	63*(17.2)	25.56	18.77	1.58	23.51	17.89	1.73	21.48	17.00	1.90	19.46	16.11	2.08	17.46	15.22	2.28	15.51	14.34	2.50
	67(19.4)	27.40	19.50	1.60	25.19	18.60	1.75	23.00	17.70	1.92	20.83	16.80	2.10	18.68	15.89	2.30	16.60	15.00	2.52
	72(22.2)	29.94	15.58	1.62	27.52	14.76	1.78	25.12	13.94	1.95	22.74	13.12	2.13	20.40	12.31	2.33	18.12	11.50	2.54
900	57(13.8)	25.82	25.82	1.60	23.95	23.95	1.76	22.08	22.08	1.92	20.20	20.20	2.11	18.33	18.33	2.31	16.48	16.48	2.53
	62(16.6)	25.86	25.86	1.60	23.98	23.98	1.76	22.11	22.11	1.92	20.23	20.23	2.11	18.35	18.35	2.31	16.50	16.50	2.53
	63*(17.2)	25.97	19.95	1.60	23.86	19.03	1.75	21.77	18.11	1.92	19.70	17.18	2.10	17.66	16.25	2.30	15.68	15.32	2.52
	67(19.4)	27.81	20.76	1.62	25.54	19.83	1.77	23.30	18.89	1.94	21.07	17.95	2.12	18.88	17.01	2.32	16.76	16.07	2.54
	72(22.2)	30.37	16.37	1.64	27.89	15.53	1.80	25.42	14.69	1.97	22.99	13.85	2.15	20.59	13.01	2.35	18.26	12.18	2.56

See Legend and Notes on Page19.

PERFORMANCE DATA (CONT)

PGR530 EXTENDED COOLING PERFORMANCE – LOW COOL

EVAPORATOR AIR		CONDENSER ENTERING AIR TEMPERATURES °F (°C)																	
		75 (23.9)			85 (29.4)			95 (35)			105 (40.6)			115 (46.1)			125 (51.7)		
CFM	EWB	Capacity MBtuh		Total Syst KW	Capacity MBtuh		Total Syst KW	Capacity MBtuh		Total Syst KW	Capacity MBtuh		Total Syst KW	Capacity MBtuh		Total Syst KW	Capacity MBtuh		Total Syst KW
		Total	Sens		Total	Sens		Total	Sens		Total	Sens		Total	Sens		Total	Sens	
655	57(13.8)	22.30	22.30	1.43	20.19	20.19	1.49	18.10	18.10	1.53	16.02	16.02	1.57	13.97	13.97	1.59	11.95	11.95	1.60
	62(16.6)	22.91	20.51	1.43	20.54	17.72	1.48	18.23	15.01	1.53	16.05	16.05	1.57	13.99	13.99	1.59	11.97	11.97	1.60
	63*(17.2)	23.36	16.69	1.43	20.94	14.35	1.48	18.55	12.09	1.53	16.21	9.92	1.56	13.91	7.86	1.59	11.68	5.91	1.60
	67(19.4)	25.19	17.36	1.41	22.57	14.93	1.46	19.99	12.60	1.51	17.47	10.36	1.55	15.00	8.21	1.58	12.60	6.19	1.59
	72(22.2)	27.74	14.14	1.38	24.84	12.08	1.44	22.00	10.11	1.49	19.22	8.24	1.54	16.51	6.47	1.57	13.88	4.82	1.58
750	57(13.8)	23.33	23.33	1.45	21.08	21.08	1.50	18.87	18.87	1.54	16.68	16.68	1.58	14.51	14.51	1.60	12.38	12.38	1.61
	62(16.6)	23.49	22.18	1.45	21.12	21.12	1.50	18.90	18.90	1.54	16.70	16.70	1.58	14.53	14.53	1.60	12.39	12.39	1.61
	63*(17.2)	23.87	17.87	1.45	21.36	15.38	1.50	18.90	12.98	1.55	16.48	10.67	1.58	14.12	8.46	1.61	11.84	6.38	1.61
	67(19.4)	25.72	18.62	1.43	23.00	16.04	1.48	20.35	13.55	1.53	17.75	11.16	1.57	15.21	8.87	1.59	12.76	6.70	1.60
	72(22.2)	28.29	14.94	1.40	25.30	12.78	1.46	22.37	10.72	1.51	19.51	8.75	1.55	16.72	6.88	1.58	14.03	5.14	1.59
840	57(13.8)	24.14	24.14	1.47	21.79	21.79	1.52	19.48	19.48	1.56	17.18	17.18	1.59	14.92	14.92	1.61	12.71	12.71	1.62
	62(16.6)	24.18	24.18	1.46	21.82	21.82	1.52	19.50	19.50	1.56	17.21	17.21	1.59	14.94	14.94	1.61	12.72	12.72	1.62
	63*(17.2)	24.24	18.95	1.47	21.66	16.32	1.52	19.15	13.79	1.56	16.68	11.35	1.60	14.28	9.02	1.62	11.96	6.80	1.63
	67(19.4)	26.09	19.78	1.45	23.31	17.06	1.50	20.60	14.43	1.55	17.95	11.90	1.59	15.36	9.47	1.61	12.87	7.16	1.62
	72(22.2)	28.69	15.67	1.42	25.62	13.42	1.48	22.63	11.27	1.53	19.71	9.21	1.57	16.86	7.26	1.60	14.12	5.44	1.61

PGR530 EXTENDED COOLING PERFORMANCE – HIGH COOL

EVAPORATOR AIR		CONDENSER ENTERING AIR TEMPERATURES °F (°C)																	
		75 (23.9)			85 (29.4)			95 (35)			105 (40.6)			115 (46.1)			125 (51.7)		
CFM	EWB	Capacity MBtuh		Total Sys KW	Capacity MBtuh		Total Sys KW	Capacity MBtuh		Total Sys KW	Capacity MBtuh		Total Sys KW	Capacity MBtuh		Total Sys KW	Capacity MBtuh		Total Sys KW
		Total	Sens		Total	Sens		Total	Sens		Total	Sens		Total	Sens		Total	Sens	
875	57(13.8)	30.54	30.54	1.97	28.11	28.11	2.15	25.68	25.68	2.35	23.24	23.24	2.57	20.78	20.78	2.83	18.33	18.33	3.12
	62(16.6)	31.60	26.39	1.98	28.82	24.96	2.15	26.06	23.52	2.35	23.34	23.16	2.57	20.81	20.81	2.83	18.36	18.36	3.12
	63*(17.2)	32.20	21.56	1.98	29.34	20.29	2.16	26.51	19.02	2.36	23.69	17.75	2.58	20.88	16.46	2.83	18.12	15.18	3.11
	67 (19.4)	34.66	22.38	2.01	31.55	21.07	2.19	28.49	19.77	2.38	25.45	18.47	2.60	22.42	17.16	2.85	19.45	15.86	3.13
	72 (22.2)	38.04	18.28	2.05	34.61	17.09	2.22	31.23	15.91	2.42	27.87	14.73	2.64	24.55	13.55	2.89	21.31	12.39	3.16
1000	57 (13.8)	31.92	31.92	2.01	29.32	29.32	2.19	26.74	26.74	2.39	24.16	24.16	2.61	21.55	21.55	2.87	18.97	18.97	3.15
	62 (16.6)	32.39	28.44	2.01	29.52	26.89	2.19	26.78	26.78	2.39	24.19	24.19	2.61	21.58	21.58	2.87	18.99	18.99	3.15
	63*(17.2)	32.92	23.02	2.02	29.95	21.68	2.19	27.01	20.35	2.39	24.10	19.02	2.61	21.21	17.67	2.86	18.37	16.33	3.14
	67 (19.4)	35.39	23.93	2.04	32.18	22.57	2.22	29.00	21.20	2.42	25.86	19.84	2.64	22.74	18.46	2.88	19.70	17.10	3.16
	72 (22.2)	38.82	19.27	2.08	35.26	18.03	2.26	31.76	16.81	2.46	28.30	15.59	2.67	24.87	14.37	2.92	21.55	13.17	3.19
1125	57 (13.8)	33.07	33.07	2.05	30.34	30.34	2.23	27.63	27.63	2.43	24.91	24.91	2.65	22.18	22.18	2.90	19.49	19.49	3.19
	62 (16.6)	33.13	33.13	2.05	30.38	30.38	2.23	27.67	27.67	2.43	24.94	24.94	2.65	22.21	22.21	2.90	19.51	19.51	3.19
	63*(17.2)	33.47	24.42	2.05	30.41	23.02	2.23	27.40	21.64	2.42	24.41	20.24	2.64	21.46	18.84	2.89	18.57	17.42	3.17
	67 (19.4)	35.96	25.44	2.08	32.64	24.00	2.25	29.39	22.58	2.45	26.17	21.16	2.67	22.98	19.72	2.91	19.90	18.28	3.19
	72 (22.2)	39.41	20.21	2.12	35.75	18.94	2.29	32.16	17.68	2.49	28.60	16.42	2.71	25.11	15.17	2.95	21.72	13.93	3.22

See Legend and Notes on Page19.

Specifications subject to change without notice.

PERFORMANCE DATA (CONT)

PGR536 EXTENDED COOLING PERFORMANCE – LOW COOL

EVAPORATOR AIR		CONDENSER ENTERING AIR TEMPERATURES °F (°C)																	
		75 (23.9)			85 (29.4)			95 (35)			105 (40.6)			115 (46.1)			125 (51.7)		
CFM	EWB	Capacity MBtuh		Total Syst KW	Capacity MBtuh		Total Syst KW	Capacity MBtuh		Total Syst KW	Capacity MBtuh		Total Syst KW	Capacity MBtuh		Total Syst KW	Capacity MBtuh		Total Syst KW
		Total	Sens		Total	Sens		Total	Sens		Total	Sens		Total	Sens		Total	Sens	
785	57(13.8)	25.86	25.86	1.54	23.52	23.52	1.64	21.19	21.19	1.74	18.89	18.89	1.84	16.59	16.59	1.93	14.33	14.33	2.02
	62(16.6)	26.33	24.60	1.54	23.73	22.02	1.64	21.23	21.23	1.74	18.92	18.92	1.84	16.62	16.62	1.93	14.35	14.35	2.02
	63*(17.2)	26.84	19.92	1.53	24.16	17.75	1.64	21.53	15.63	1.74	18.93	13.59	1.84	16.37	11.61	1.94	13.88	9.71	2.03
	67(19.4)	28.92	20.73	1.51	26.02	18.48	1.62	23.18	16.30	1.72	20.39	14.19	1.82	17.65	12.15	1.92	14.97	10.19	2.02
	72(22.2)	31.81	16.77	1.48	28.62	14.85	1.59	25.50	13.00	1.70	22.43	11.22	1.80	19.42	9.51	1.90	16.49	7.89	2.00
900	57(13.8)	27.03	27.03	1.55	24.55	24.55	1.65	22.09	22.09	1.75	19.65	19.65	1.85	17.23	17.23	1.94	14.84	14.84	2.03
	62(16.6)	27.07	27.07	1.55	24.59	24.59	1.65	22.12	22.12	1.75	19.68	19.68	1.85	17.25	17.25	1.94	14.86	14.86	2.03
	63*(17.2)	27.41	21.37	1.55	24.64	19.06	1.65	21.93	16.82	1.75	19.25	14.64	1.85	16.63	12.53	1.95	14.08	10.51	2.04
	67(19.4)	29.51	22.28	1.53	26.52	19.89	1.63	23.59	17.58	1.74	20.72	15.32	1.84	17.90	13.15	1.94	15.16	11.05	2.03
	72(22.2)	32.43	17.75	1.50	29.14	15.74	1.61	25.92	13.80	1.71	22.76	11.93	1.82	19.67	10.14	1.92	16.67	8.43	2.01
1010	57(13.8)	27.98	27.98	1.56	25.37	25.37	1.66	22.80	22.80	1.76	20.25	20.25	1.86	17.72	17.72	1.95	15.24	15.24	2.04
	62(16.6)	28.02	28.02	1.56	25.41	25.41	1.66	22.83	22.83	1.76	20.28	20.28	1.86	17.75	17.75	1.95	15.25	15.25	2.04
	63*(17.2)	27.84	22.71	1.56	24.99	20.28	1.67	22.22	17.92	1.77	19.49	15.62	1.87	16.82	13.38	1.96	14.28	14.28	2.05
	67(19.4)	29.94	23.73	1.54	26.88	21.21	1.65	23.89	18.76	1.75	20.96	16.38	1.85	18.09	14.07	1.95	15.32	11.82	2.04
	72(22.2)	32.87	18.66	1.51	29.50	16.57	1.62	26.21	14.55	1.73	22.99	12.60	1.83	19.84	10.73	1.93	16.79	8.94	2.02

PGR536 EXTENDED COOLING PERFORMANCE – HIGH COOL

EVAPORATOR AIR		CONDENSER ENTERING AIR TEMPERATURES °F (°C)																	
		75 (23.9)			85 (29.4)			95 (35)			105 (40.6)			115 (46.1)			125 (51.7)		
CFM	EWB	Capacity MBtuh		Total Sys KW	Capacity MBtuh		Total Sys KW	Capacity MBtuh		Total Sys KW	Capacity MBtuh		Total Sys KW	Capacity MBtuh		Total Sys KW	Capacity MBtuh		Total Sys KW
		Total	Sens		Total	Sens		Total	Sens		Total	Sens		Total	Sens		Total	Sens	
1050	57(13.8)	35.86	35.86	2.29	33.72	33.72	2.51	31.52	31.52	2.76	29.26	29.26	3.03	26.89	26.89	3.34	24.47	24.47	3.69
	62(16.6)	36.94	33.14	2.30	34.42	31.53	2.52	31.86	29.88	2.76	29.31	29.31	3.03	26.93	26.93	3.34	24.51	24.51	3.69
	63*(17.2)	37.62	27.02	2.31	35.04	25.57	2.53	32.41	24.12	2.77	29.71	22.66	3.03	26.94	21.18	3.34	24.13	19.71	3.69
	67(19.4)	40.43	28.03	2.34	37.63	26.55	2.56	34.79	25.07	2.80	31.86	23.58	3.07	28.87	22.07	3.37	25.86	20.58	3.71
	72(22.2)	44.31	22.80	2.39	41.22	21.45	2.61	38.07	20.10	2.85	34.86	18.73	3.11	31.58	17.37	3.41	28.28	16.02	3.75
1200	57(13.8)	37.44	37.44	2.33	35.15	35.15	2.55	32.81	32.81	2.80	30.39	30.39	3.07	27.88	27.88	3.38	25.31	25.31	3.73
	62(16.6)	37.84	35.72	2.34	35.28	35.09	2.56	32.85	32.85	2.80	30.43	30.43	3.07	27.92	27.92	3.38	25.34	25.34	3.73
	63*(17.2)	38.44	28.86	2.34	35.75	27.35	2.56	33.01	25.83	2.80	30.22	24.30	3.07	27.35	22.75	3.37	24.48	21.21	3.71
	67(19.4)	41.27	30.00	2.38	38.37	28.45	2.59	35.40	26.90	2.83	32.38	25.34	3.10	29.29	23.77	3.40	26.20	22.20	3.74
	72(22.2)	45.20	24.05	2.43	41.98	22.65	2.64	38.71	21.25	2.88	35.39	19.85	3.15	32.00	18.44	3.45	28.62	17.05	3.79
1350	57(13.8)	38.77	38.77	2.37	36.36	36.36	2.59	33.88	33.88	2.84	31.33	31.33	3.11	28.69	28.69	3.42	26.00	26.00	3.76
	62 (16.6)	38.82	38.82	2.37	36.40	36.40	2.59	33.92	33.92	2.84	31.37	31.37	3.11	28.72	28.72	3.42	26.03	26.03	3.76
	63*(17.2)	39.08	30.63	2.38	36.30	29.05	2.59	33.49	27.48	2.83	30.61	25.88	3.10	27.68	24.26	3.40	24.75	22.63	3.74
	67(19.4)	41.92	31.90	2.41	38.92	30.29	2.63	35.87	28.67	2.86	32.77	27.04	3.13	29.62	25.40	3.43	26.47	23.74	3.77
	72(22.2)	45.86	25.24	2.46	42.55	23.81	2.68	39.20	22.37	2.92	35.78	20.92	3.18	32.32	19.48	3.48	28.86	18.05	3.81

See Legend and Notes on Page19.

PERFORMANCE DATA (CONT)

PGR542 EXTENDED COOLING PERFORMANCE – LOW COOL

EVAPORATOR AIR		CONDENSER ENTERING AIR TEMPERATURES °F (°C)																	
		75 (23.9)			85 (29.4)			95 (35)			105 (40.6)			115 (46.1)			125 (51.7)		
CFM	EWB	Capacity MBtuh		Total Syst KW	Capacity MBtuh		Total Syst KW	Capacity MBtuh		Total Syst KW	Capacity MBtuh		Total Syst KW	Capacity MBtuh		Total Syst KW	Capacity MBtuh		Total Syst KW
		Total	Sens		Total	Sens		Total	Sens		Total	Sens		Total	Sens		Total	Sens	
915	57(13.8)	30.96	30.96	1.93	28.67	28.67	1.98	26.33	26.33	2.01	23.93	23.93	2.04	21.48	21.48	2.05	19.01	19.01	2.03
	62(16.6)	31.67	29.10	1.93	29.07	26.30	1.97	26.44	26.27	2.01	23.97	23.97	2.04	21.51	21.51	2.05	19.03	19.03	2.03
	63*(17.2)	32.30	23.63	1.92	29.63	21.25	1.97	26.89	18.92	2.01	24.12	16.63	2.04	21.31	14.41	2.05	18.51	12.28	2.04
	67(19.4)	34.88	24.60	1.90	31.98	22.15	1.94	29.02	19.73	1.98	26.03	17.38	2.01	23.01	15.09	2.03	20.00	12.89	2.02
	72(22.2)	38.48	20.01	1.87	35.25	17.89	1.91	31.99	15.82	1.95	28.70	13.81	1.98	25.38	11.87	1.99	22.08	10.03	1.98
1050	57(13.8)	32.40	32.40	1.95	29.96	29.96	2.00	27.47	27.47	2.03	24.92	24.92	2.05	22.32	22.32	2.06	19.70	19.70	2.04
	62(16.6)	32.52	32.36	1.95	30.01	30.01	1.99	27.51	27.51	2.03	24.96	24.96	2.05	22.35	22.35	2.06	19.73	19.73	2.04
	63*(17.2)	33.02	25.34	1.95	30.24	22.82	1.99	27.41	20.34	2.03	24.54	17.91	2.06	21.65	15.55	2.07	18.77	13.28	2.06
	67(19.4)	35.63	26.44	1.93	32.61	23.83	1.97	29.55	21.26	2.01	26.46	18.75	2.03	23.35	16.31	2.04	20.26	13.96	2.03
	72(22.2)	39.26	21.17	1.89	35.92	18.95	1.93	32.54	16.78	1.97	29.14	14.67	2.00	25.72	12.64	2.01	22.33	10.70	1.99
1180	57(13.8)	33.57	33.57	1.98	31.00	31.00	2.01	28.38	28.38	2.05	25.70	25.70	2.07	22.99	22.99	2.07	20.25	20.25	2.05
	62(16.6)	33.62	33.62	1.98	31.04	31.04	2.01	28.42	28.42	2.05	25.74	25.74	2.07	23.02	23.02	2.07	20.27	20.27	2.05
	63*(17.2)	33.55	26.93	1.98	30.68	24.28	2.02	27.77	21.66	2.05	24.85	19.10	2.08	21.90	16.60	2.09	18.99	18.84	2.07
	67(19.4)	36.17	28.15	1.95	33.07	25.40	1.99	29.92	22.69	2.03	26.76	20.04	2.05	23.60	17.46	2.06	20.46	14.94	2.05
	72(22.2)	39.84	22.25	1.92	36.39	19.94	1.96	32.92	17.68	1.99	29.44	15.49	2.02	25.95	13.37	2.02	22.49	11.34	2.01

PGR542 EXTENDED COOLING PERFORMANCE – HIGH COOL

EVAPORATOR AIR		CONDENSER ENTERING AIR TEMPERATURES °F (°C)																	
		75 (23.9)			85 (29.4)			95 (35)			105 (40.6)			115 (46.1)			125 (51.7)		
CFM	EWB	Capacity MBtuh		Total Sys KW	Capacity MBtuh		Total Sys KW	Capacity MBtuh		Total Sys KW	Capacity MBtuh		Total Sys KW	Capacity MBtuh		Total Sys KW	Capacity MBtuh		Total Sys KW
		Total	Sens		Total	Sens		Total	Sens		Total	Sens		Total	Sens		Total	Sens	
1225	57(13.8)	44.10	44.10	2.67	40.87	40.87	2.95	37.59	37.59	3.27	34.28	34.28	3.63	30.95	30.95	4.03	27.68	27.68	4.47
	62(16.6)	45.47	38.57	2.68	41.76	36.75	2.96	38.02	34.87	3.28	34.34	34.34	3.63	31.00	31.00	4.03	27.72	27.72	4.47
	63*(17.2)	46.30	31.46	2.69	42.48	29.82	2.97	38.64	28.16	3.28	34.81	26.49	3.64	31.02	24.81	4.03	27.34	23.17	4.46
	67 (19.4)	49.63	32.58	2.71	45.48	30.90	3.00	41.33	29.20	3.32	37.21	27.50	3.67	33.12	25.80	4.06	29.18	24.14	4.49
	72(22.2)	54.17	26.44	2.75	49.61	24.90	3.04	45.06	23.34	3.36	40.53	21.79	3.72	36.05	20.23	4.11	31.74	18.73	4.54
1400	57(13.8)	45.98	45.98	2.72	42.52	42.52	3.01	39.03	39.03	3.33	35.52	35.52	3.69	32.01	32.01	4.08	28.56	28.56	4.52
	62(16.6)	46.52	41.52	2.73	42.71	42.37	3.01	39.08	39.08	3.33	35.57	35.57	3.69	32.04	32.04	4.08	28.59	28.59	4.52
	63*(17.2)	47.25	33.56	2.73	43.28	31.84	3.01	39.30	30.11	3.33	35.35	28.36	3.68	31.44	26.61	4.07	27.67	24.89	4.50
	67(19.4)	50.58	34.83	2.76	46.29	33.07	3.04	42.00	31.30	3.36	37.75	29.52	3.72	33.55	27.75	4.11	29.50	26.00	4.54
	72(22.2)	55.17	27.86	2.79	50.45	26.26	3.08	45.74	24.65	3.41	41.08	23.05	3.76	36.47	21.45	4.16	32.06	19.90	4.59
1575	57(13.8)	47.54	47.54	2.77	43.89	43.89	3.05	40.22	40.22	3.38	36.54	36.54	3.74	32.86	32.86	4.13	29.26	29.26	4.57
	62(16.6)	47.60	47.60	2.77	43.95	43.95	3.05	40.27	40.27	3.38	36.59	36.59	3.74	32.90	32.90	4.14	29.29	29.29	4.57
	63*(17.2)	47.97	35.58	2.77	43.88	33.79	3.05	39.80	31.99	3.37	35.76	30.17	3.72	31.76	28.34	4.12	27.94	26.51	4.55
	67(19.4)	51.31	37.00	2.80	46.89	35.17	3.08	42.50	33.33	3.40	38.15	31.48	3.76	33.86	29.62	4.15	29.75	27.77	4.58
	72 (22.2)	55.92	29.22	2.84	51.07	27.57	3.12	46.25	25.93	3.45	41.47	24.28	3.81	36.77	22.64	4.20	32.27	21.05	4.63

See Legend and Notes on Page19.

Specifications subject to change without notice.

PERFORMANCE DATA (CONT)

PGR548 EXTENDED COOLING PERFORMANCE – LOW COOL

EVAPORATOR AIR		CONDENSER ENTERING AIR TEMPERATURES °F (°C)																	
		75 (23.9)			85 (29.4)			95 (35)			105 (40.6)			115 (46.1)			125 (51.7)		
CFM	EWB	Capacity MBtuh		Total Syst KW	Capacity MBtuh		Total Syst KW	Capacity MBtuh		Total Syst KW	Capacity MBtuh		Total Syst KW	Capacity MBtuh		Total Syst KW	Capacity MBtuh		Total Syst KW
		Total	Sens		Total	Sens		Total	Sens		Total	Sens		Total	Sens		Total	Sens	
1050	57(13.8)	35.18	35.18	2.15	32.65	32.65	2.21	30.08	30.08	2.26	27.45	27.45	2.29	24.76	24.76	2.29	22.01	22.01	2.26
	62(16.6)	35.89	33.38	2.14	32.99	30.42	2.21	30.13	30.13	2.26	27.49	27.49	2.29	24.80	24.80	2.29	22.04	22.04	2.25
	63*(17.2)	36.62	27.06	2.14	33.64	24.54	2.21	30.61	22.07	2.26	27.55	19.66	2.29	24.45	17.30	2.29	21.33	15.03	2.26
	67(19.4)	39.58	28.19	2.11	36.35	25.60	2.19	33.07	23.05	2.24	29.78	20.56	2.28	26.42	18.13	2.28	23.06	15.78	2.25
	72(22.2)	43.68	22.88	2.08	40.10	20.63	2.16	36.50	18.44	2.22	32.85	16.30	2.26	29.17	14.23	2.26	25.49	12.25	2.24
1200	57(13.8)	36.76	36.76	2.18	34.07	34.07	2.25	31.32	31.32	2.29	28.53	28.53	2.32	25.68	25.68	2.32	22.77	22.77	2.28
	62(16.6)	36.82	36.82	2.18	34.12	34.12	2.25	31.37	31.37	2.29	28.58	28.58	2.32	25.71	25.71	2.32	22.80	22.80	2.28
	63*(17.2)	37.37	28.96	2.18	34.28	26.30	2.25	31.15	23.69	2.30	27.99	21.13	2.32	24.79	18.64	2.32	21.59	16.21	2.29
	67(19.4)	40.36	30.24	2.15	37.01	27.49	2.23	33.63	24.79	2.28	30.21	22.14	2.31	26.77	19.57	2.31	23.32	17.07	2.28
	72(22.2)	44.51	24.17	2.12	40.80	21.82	2.20	37.07	19.52	2.26	33.30	17.29	2.29	29.52	15.13	2.29	25.74	13.06	2.26
1310	57(13.8)	37.76	37.76	2.21	34.95	34.95	2.27	32.10	32.10	2.32	29.20	29.20	2.34	26.23	26.23	2.34	23.23	23.23	2.30
	62(16.6)	37.81	37.81	2.21	35.00	35.00	2.27	32.15	32.15	2.32	29.24	29.24	2.34	26.27	26.27	2.34	23.26	23.26	2.30
	63*(17.2)	37.81	30.32	2.21	34.64	27.55	2.28	31.45	24.84	2.32	28.23	22.18	2.35	24.98	19.58	2.34	21.76	21.62	2.31
	67(19.4)	40.80	31.70	2.19	37.39	28.84	2.26	33.93	26.03	2.31	30.46	23.28	2.33	26.96	20.59	2.33	23.47	17.97	2.29
	72(22.2)	44.98	25.09	2.15	41.19	22.67	2.23	37.37	20.30	2.28	33.55	18.00	2.31	29.70	15.77	2.32	25.85	13.64	2.28

PGR548 EXTENDED COOLING PERFORMANCE – HIGH COOL

EVAPORATOR AIR		CONDENSER ENTERING AIR TEMPERATURES °F (°C)																	
		75 (23.9)			85 (29.4)			95 (35)			105 (40.6)			115 (46.1)			125 (51.7)		
CFM	EWB	Capacity MBtuh		Total Sys KW	Capacity MBtuh		Total Sys KW	Capacity MBtuh		Total Sys KW	Capacity MBtuh		Total Sys KW	Capacity MBtuh		Total Sys KW	Capacity MBtuh		Total Sys KW
		Total	Sens		Total	Sens		Total	Sens		Total	Sens		Total	Sens		Total	Sens	
1400	57(13.8)	48.89	48.89	3.11	45.66	45.66	3.41	42.38	42.38	3.75	39.05	39.05	4.13	35.68	35.68	4.55	32.30	32.30	4.99
	62(16.6)	50.28	43.47	3.12	46.51	41.71	3.42	42.75	39.90	3.76	39.11	39.11	4.13	35.73	35.73	4.55	32.34	32.34	4.99
	63*(17.2)	51.23	35.39	3.13	47.37	33.80	3.43	43.48	32.17	3.77	39.57	30.53	4.14	35.65	28.86	4.54	31.78	27.20	4.98
	67(19.4)	55.12	36.75	3.16	50.93	35.12	3.46	46.72	33.47	3.80	42.50	31.80	4.17	38.27	30.11	4.58	34.10	28.42	5.02
	72(22.2)	60.49	29.87	3.21	55.87	28.34	3.51	51.22	26.80	3.84	46.58	25.25	4.22	41.93	23.68	4.62	37.37	22.12	5.06
1600	57(13.8)	51.01	51.01	3.18	47.56	47.56	3.48	44.07	44.07	3.83	40.53	40.53	4.20	36.95	36.95	4.62	33.37	33.37	5.06
	62(16.6)	51.47	46.83	3.18	47.65	47.65	3.49	44.13	44.13	3.83	40.59	40.59	4.20	37.00	37.00	4.62	33.41	33.41	5.06
	63*(17.2)	52.30	37.79	3.19	48.28	36.13	3.49	44.24	34.44	3.83	40.20	32.73	4.20	36.15	30.99	4.60	32.18	29.26	5.04
	67(19.4)	56.21	39.32	3.23	51.86	37.62	3.53	47.50	35.90	3.86	43.13	34.16	4.23	38.77	32.40	4.64	34.50	30.65	5.07
	72(22.2)	61.65	31.49	3.27	56.85	29.91	3.57	52.04	28.32	3.91	47.24	26.72	4.28	42.45	25.11	4.68	37.76	23.52	5.11
1750	57(13.8)	52.37	52.37	3.23	48.78	48.78	3.54	45.15	45.15	3.88	41.47	41.47	4.25	37.75	37.75	4.66	34.04	34.04	5.11
	62(16.6)	52.45	52.45	3.23	48.85	48.85	3.54	45.21	45.21	3.88	41.52	41.52	4.26	37.79	37.79	4.66	34.08	34.08	5.11
	63*(17.2)	52.92	39.53	3.24	48.81	37.82	3.54	44.68	36.08	3.87	40.56	34.32	4.24	36.44	32.53	4.65	32.42	30.72	5.08
	67(19.4)	56.86	41.19	3.27	52.41	39.44	3.57	47.95	37.67	3.91	43.50	35.88	4.28	39.06	34.07	4.68	34.73	32.25	5.12
	72(22.2)	62.33	32.67	3.32	57.41	31.06	3.62	52.50	29.43	3.95	47.61	27.80	4.32	42.73	26.16	4.72	37.97	24.55	5.15

See Legend and Notes on Page19.

PERFORMANCE DATA (CONT)

PGR560 EXTENDED COOLING PERFORMANCE – LOW COOL

EVAPORATOR AIR		CONDENSER ENTERING AIR TEMPERATURES °F (°C)																	
		75 (23.9)			85 (29.4)			95 (35)			105 (40.6)			115 (46.1)			125 (51.7)		
CFM	EWB	Capacity MBtuh		Total Syst KW	Capacity MBtuh		Total Syst KW	Capacity MBtuh		Total Syst KW	Capacity MBtuh		Total Syst KW	Capacity MBtuh		Total Syst KW	Capacity MBtuh		Total Syst KW
		Total	Sens		Total	Sens		Total	Sens		Total	Sens		Total	Sens		Total	Sens	
1200	57(13.8)	42.50	42.50	2.61	41.54	41.54	2.64	40.36	40.36	2.63	38.87	38.87	2.59	37.03	37.03	2.49	34.82	34.82	2.34
	62(16.6)	43.53	40.01	2.61	42.15	38.49	2.64	40.55	40.24	2.63	38.94	38.94	2.59	37.09	37.09	2.49	34.87	34.87	2.34
	63*(17.2)	44.37	32.51	2.61	42.92	31.12	2.63	41.20	29.70	2.63	39.14	28.21	2.59	36.69	26.66	2.49	33.85	25.05	2.34
	67(19.4)	47.96	33.87	2.59	46.38	32.46	2.62	44.50	31.00	2.62	42.28	29.49	2.58	39.65	27.93	2.49	36.60	26.30	2.33
	72(22.2)	52.94	27.58	2.56	51.15	26.23	2.60	49.07	24.86	2.60	46.63	23.45	2.57	43.75	21.98	2.48	40.44	20.47	2.33
1370	57(13.8)	44.36	44.36	2.67	43.29	43.29	2.69	41.98	41.98	2.68	40.36	40.36	2.63	38.36	38.36	2.53	35.98	35.98	2.37
	62(16.6)	44.59	44.18	2.67	43.36	43.36	2.69	42.05	42.05	2.68	40.42	40.42	2.63	38.42	38.42	2.53	36.03	36.03	2.37
	63*(17.2)	45.25	34.73	2.67	43.69	33.28	2.69	41.88	31.80	2.68	39.71	30.26	2.63	37.17	28.64	2.53	34.23	26.95	2.37
	67(19.4)	48.88	36.25	2.65	47.18	34.77	2.68	45.19	33.26	2.67	42.87	31.70	2.62	40.13	30.07	2.53	36.99	28.37	2.37
	72(22.2)	53.90	29.08	2.62	52.00	27.69	2.65	49.80	26.28	2.65	47.23	24.83	2.61	44.23	23.32	2.52	40.79	21.77	2.36
1545	57(13.8)	45.96	45.96	2.73	44.78	44.78	2.75	43.35	43.35	2.73	41.59	41.59	2.67	39.46	39.46	2.57	36.92	36.92	2.40
	62(16.6)	46.03	46.03	2.73	44.84	44.84	2.75	43.41	43.41	2.73	41.65	41.65	2.67	39.51	39.51	2.57	36.97	36.97	2.40
	63*(17.2)	45.92	36.92	2.73	44.29	35.42	2.75	42.38	33.88	2.73	40.14	32.27	2.68	37.53	30.58	2.57	34.57	34.35	2.41
	67(19.4)	49.57	38.62	2.71	47.78	37.08	2.73	45.71	35.51	2.72	43.29	33.88	2.67	40.48	32.18	2.57	37.28	30.36	2.40
	72(22.2)	54.62	30.56	2.69	52.62	29.14	2.71	50.31	27.69	2.71	47.64	26.20	2.66	44.54	24.66	2.56	40.98	23.08	2.39

PGR560 EXTENDED COOLING PERFORMANCE – HIGH COOL

EVAPORATOR AIR		CONDENSER ENTERING AIR TEMPERATURES °F (°C)																	
		75 (23.9)			85 (29.4)			95 (35)			105 (40.6)			115 (46.1)			125 (51.7)		
CFM	EWB	Capacity MBtuh		Total Sys KW	Capacity MBtuh		Total Sys KW	Capacity MBtuh		Total Sys KW	Capacity MBtuh		Total Sys KW	Capacity MBtuh		Total Sys KW	Capacity MBtuh		Total Sys KW
		Total	Sens		Total	Sens		Total	Sens		Total	Sens		Total	Sens		Total	Sens	
1750	57(13.8)	58.66	58.66	3.81	55.57	55.57	4.17	52.33	52.33	4.58	48.92	48.92	5.04	45.32	45.32	5.57	41.58	41.58	6.16
	62(16.6)	59.85	53.13	3.82	56.20	51.25	4.17	52.51	52.25	4.58	48.99	48.99	5.05	45.37	45.37	5.57	41.63	41.63	6.16
	63*(17.2)	60.83	43.11	3.82	57.05	41.43	4.18	53.16	39.70	4.58	49.10	37.91	5.04	44.88	36.06	5.56	40.58	34.17	6.13
	67(19.4)	65.32	44.77	3.86	61.22	43.05	4.22	57.00	41.30	4.63	52.61	39.48	5.10	48.03	37.60	5.62	43.40	35.70	6.20
	72(22.2)	71.52	36.12	3.90	67.01	34.50	4.27	62.34	32.84	4.69	57.48	31.12	5.17	52.44	29.35	5.70	47.35	27.57	6.29
2000	57(13.8)	60.99	60.99	3.90	57.68	57.68	4.26	54.22	54.22	4.68	50.58	50.58	5.15	46.74	46.74	5.68	42.79	42.79	6.27
	62(16.6)	61.23	60.84	3.90	57.75	57.75	4.26	54.29	54.29	4.68	50.64	50.64	5.15	46.80	46.80	5.68	42.83	42.83	6.27
	63*(17.2)	61.92	45.99	3.91	57.99	44.25	4.26	53.95	42.45	4.67	49.76	40.60	5.13	45.40	38.65	5.65	41.00	36.66	6.22
	67(19.4)	66.43	47.87	3.94	62.19	46.10	4.30	57.80	44.27	4.72	53.27	42.39	5.19	48.55	40.42	5.71	43.81	38.42	6.29
	72(22.2)	72.71	38.07	3.98	68.00	36.40	4.35	63.17	34.70	4.78	58.16	32.94	5.26	52.95	31.12	5.79	47.73	29.31	6.37
2250	57(13.8)	62.91	62.91	3.99	59.42	59.42	4.35	55.76	55.76	4.77	51.93	51.93	5.25	47.89	47.89	5.78	43.74	43.74	6.37
	62(16.6)	62.99	62.99	3.99	59.49	59.49	4.36	55.83	55.83	4.77	51.99	51.99	5.25	47.94	47.94	5.78	43.79	43.79	6.37
	63*(17.2)	62.73	48.75	3.99	58.69	46.95	4.35	54.54	45.08	4.76	50.24	43.14	5.22	45.80	41.08	5.73	41.35	38.84	6.30
	67(19.4)	67.27	50.85	4.02	62.89	49.01	4.39	58.40	47.12	4.80	53.75	45.15	5.27	48.94	43.08	5.80	44.15	40.88	6.38
	72(22.2)	73.56	39.95	4.06	68.73	38.24	4.43	63.76	36.50	4.86	58.61	34.70	5.34	53.29	32.85	5.87	47.96	31.01	6.46

* At 75°F (24°C) entering dry bulb–Tennessee Valley Authority (TVA) rating conditions; all others at 80°F (27°C) dry bulb.

LEGEND

BF— Bypass Factor
edb— Entering Dry–Bulb
Ewb— Entering Wet–Bulb
kW — Total Unit Power Input
SHC— Sensible Heat Capacity (1000 Btuh)
TC — Total Capacity (1000 Btuh) (net)
rh—Relative Humidity

COOLING NOTES:

1. Ratings are net; they account for the effects of the evaporator–fan motor power and heat.
2. Direct interpolation is permissible. Do not extrapolate.
3. The following formulas may be used:

$$t_{ldb} = t_{edb} - \frac{\text{Sensible capacity (Btuh)}}{1.10 \times \text{cfm}}$$

t_{lwb} = Wet–bulb temperature corresponding to enthalpy air leaving evaporator coil (h_{lwb})

$$h_{lwb} = h_{ewb} - \frac{\text{total capacity (Btuh)}}{4.5 \times \text{cfm}}$$

Where: h_{ewb} = Enthalpy of air entering evaporator coil

4. The SHC is based on 805 F (26.6°C) edb temperature of air entering evaporator coil. Below 80°F (26.6°C) edb, subtract (corr factor x cfm) from SHC.
Above 80° F (26.6°C) edb, add (corr factor x cfm) to SHC.
Correction Factor = 1.10 x (1 + BF) x (edb – 80).
5. Integrated capacity is maximum (instantaneous) capacity less the effect of frost on the outdoor coil and the heat required to defrost it.

UNIT	ELECTRICAL CHARACTERISTICS	UNIT WT. LB	UNIT WT. KG	UNIT HEIGHT IN/MM A"	CENTER OF GRAVITY IN/MM X	Y	Z
PGR524(040/060)(K/H)G*0A1	208/230-1, 208/230-3-60	342	155.0	44-1/8 1121	22-13/16 579.4	15-5/16 388.9	15-13/16 401.6
PGR530(040/060)(K/H)G*0A1	208/230-1, 208/230-3-60	376	170.4	44-1/8 1121	22-13/16 579.4	15-5/16 388.9	16-5/8 422.3

UNIT	VOLTAGE	CORNER WEIGHT LB/KG "1"	"2"	"3"	"4"
PGR524(040/060)(K/H)G*0A1	208/230	51.3	23.3	68.4	31.0	102.5	46.5	119.6	54.3
PGR530(040/060)(K/H)G*0A1	208/230	56.4	25.6	75.2	34.1	112.7	51.2	131.5	59.7

NOTE: ALL TABLE DATA RELEVANT FOR ALL FACTORY INSTALLED OPTIONS EXCEPT ECONOMIZER

REQUIRED CLEARANCES TO COMBUSTIBLE MATL.

	INCHES [MM]
TOP OF UNIT	14 [355.6]
DUCT SIDE OF UNIT	2 [50.8]
SIDE OPPOSITE DUCTS	114 [355.6]
BOTTOM OF UNIT	12 [112.7]
FLUE PANEL	36 [914.4]

NEC. REQUIRED CLEARANCES.

	INCHES [MM]
BETWEEN UNITS, POWER ENTRY SIDE	42 [1066.8]
UNIT AND UNGROUNDED SURFACES, POWER ENTRY SIDE	36 [914.0]
UNIT AND BLOCK OR CONCRETE WALLS AND OTHER GROUNDED SURFACES, POWER ENTRY SIDE	42 [1066.8]

REQUIRED CLEARANCE FOR OPERATION AND SERVICING

	INCHES [MM]
EVAP. COIL ACCESS SIDE	36 [914.0]
POWER ENTRY SIDE	42 [1066.8]
(EXCEPT FOR NEC REQUIREMENTS)	
UNIT TOP	48 [1219.2]
SIDE OPPOSITE DUCTS	36 [914.0]
DUCT PANEL	12 [304.8]*

*MINIMUM DISTANCES: IF UNIT IS PLACED LESS THAN 12 [304.8] FROM WALL SYSTEM, THEN SYSTEM PERFORMANCE MAYBE COMPROMISED.

DIMENSIONS IN [ ] ARE IN MM

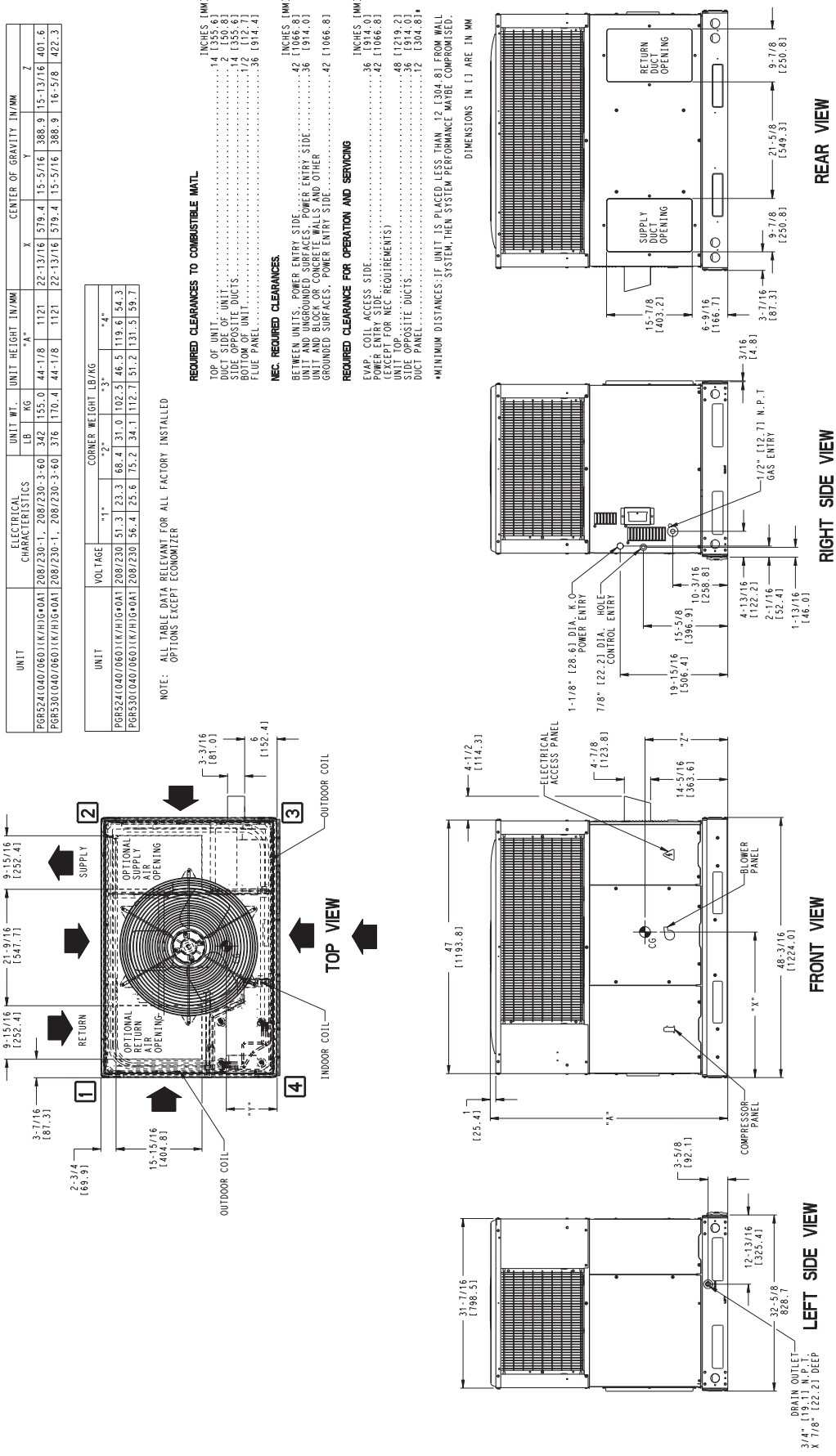

Specifications subject to change without notice.

UNIT	ELECTRICAL CHARACTERISTICS	UNIT WT.		UNIT HEIGHT IN/MM	CENTER OF GRAVITY IN/MM		
		LB	KG	"A"	X	Y	Z
PGR536[060/090]K/H/G*0A1	208/230-1,208/230-3-60	463	210.1	44-3/4 1137	22-13/16 579.4	18 457.2	17-1/8 435.0
PGR542[060/090]K/H/G*0A1	208/230-1,208/230-3-60	463	210.1	44-3/4 1137	22-13/16 579.4	18 457.2	17-1/8 435.0
PGR548[090/115/130]K/H/G*0A1	208/230-1,208/230-3-60	481	218.3	50-3/4 1289	22-13/16 579.4	18 457.2	17-3/8 441.3
PGR560[090/115/130]K/H/G*0A1	208/230-1,208/230-3-60	509	231.0	52-3/4 1340	22-13/16 579.4	18 457.2	17-5/8 447.7

UNIT	VOLTAGE	CORNER WEIGHT LB/KG							
		"1"		"2"		"3"		"4"	
PGR536[060/090]K/H/G*0A1	208/230	69.5	31.5	92.6	42.1	139.0	63.1	162.1	73.6
PGR542[060/090]K/H/G*0A1	208/230	69.5	31.5	92.6	42.1	139.0	63.1	162.1	73.6
PGR548[090/115/130]K/H/G*0A1	208/230	72.2	32.8	96.2	43.7	144.4	65.5	168.4	76.5
PGR560[090/115/130]K/H/G*0A1	208/230	76.4	34.7	101.8	46.2	152.8	69.4	178.2	80.9

NOTE: ALL TABLE DATA RELEVANT FOR ALL FACTORY INSTALLED OPTIONS EXCEPT ECONOMIZER

REQUIRED CLEARANCES TO COMBUSTIBLE MAT'L. INCHES [MM]

TOP OF UNIT.....14 [355.6]
DUCT SIDE OF UNIT.....2 [50.8]
SIDE OPPOSITE DUCTS.....14 [355.6]
BOTTOM OF UNIT.....12 [12.7]
FLUE PANEL.....36 [914.4]

NEC. REQUIRED CLEARANCES. INCHES [MM]

BETWEEN UNITS, POWER ENTRY SIDE.....42 [1066.8]
UNIT AND UNGROUNDED SURFACES,POWER ENTRY SIDE..36 [914.0]
UNIT AND BLOCK OR CONCRETE WALLS AND OTHER GROUNDED SURFACES, POWER ENTRY SIDE.....42 [1066.8]

REQUIRED CLEARANCE FOR OPERATION AND SERVICING INCHES [MM]

EVAP. COIL ACCESS SIDE.....36 [914.0]
POWER ENTRY SIDE.....42 [1066.8]
(EXCEPT FOR NEC REQUIREMENTS)
UNIT TOP.....48 [1219.2]
SIDE OPPOSITE DUCTS.....36 [914.0]
DUCT PANEL.....12 [304.8]*

*MINIMUM DISTANCES: IF UNIT IS PLACED LESS THAN 12 [304.8] FROM WALL, SYSTEM PERFORMANCE MAYBE COMPROMISED.

DIMENSIONS IN [] ARE IN MM

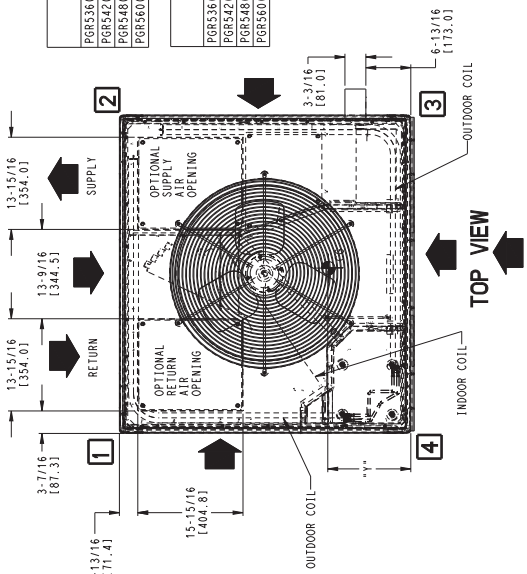

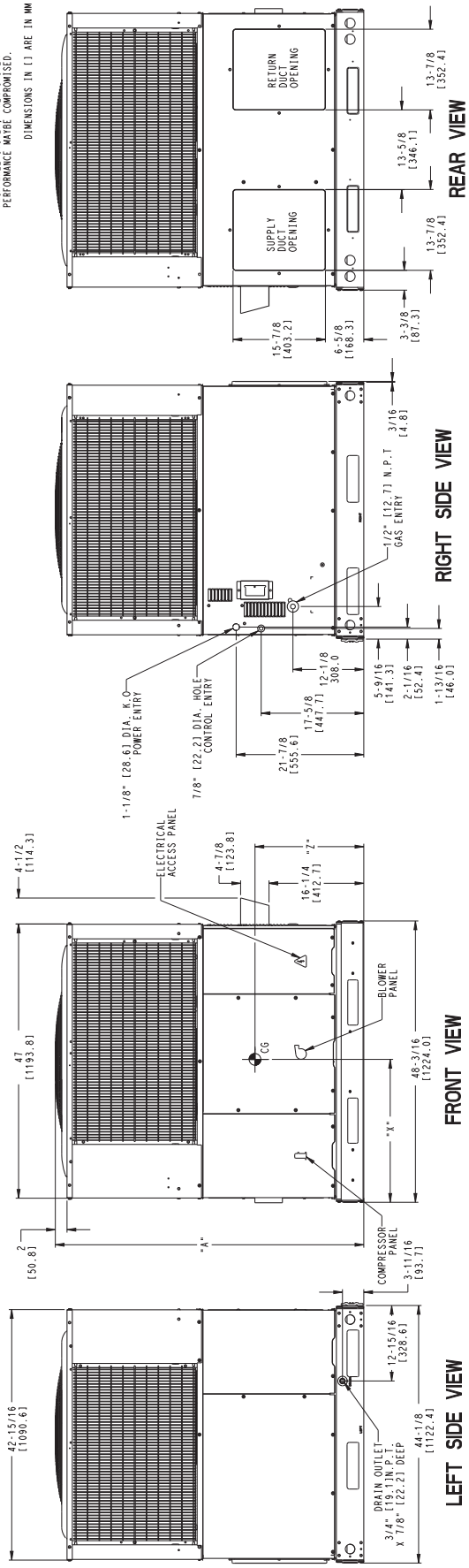

ROOF CURBS

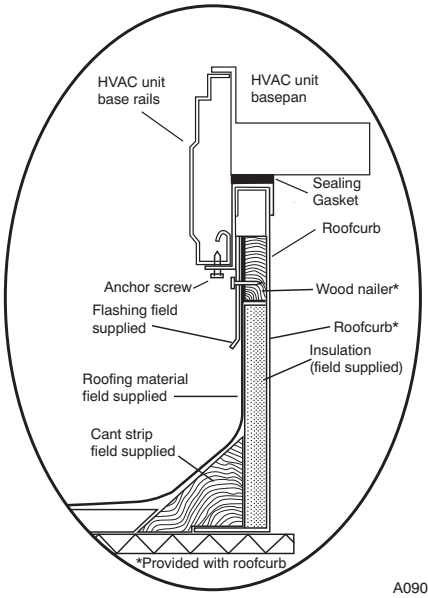

ROOF CURB DETAIL

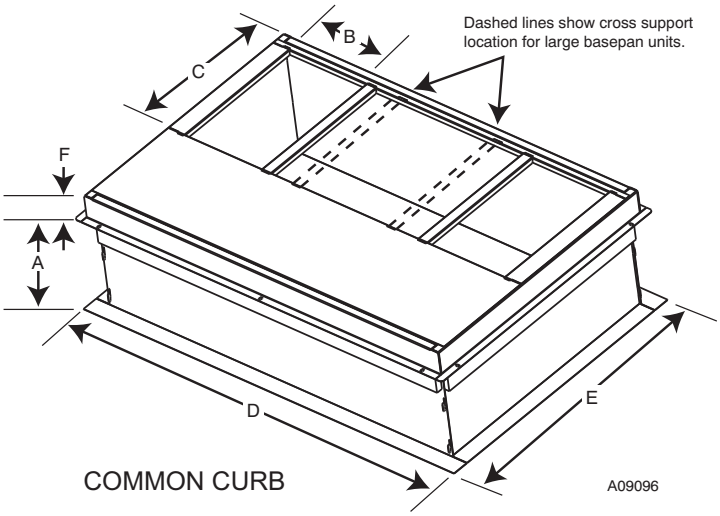

COMMON CURB

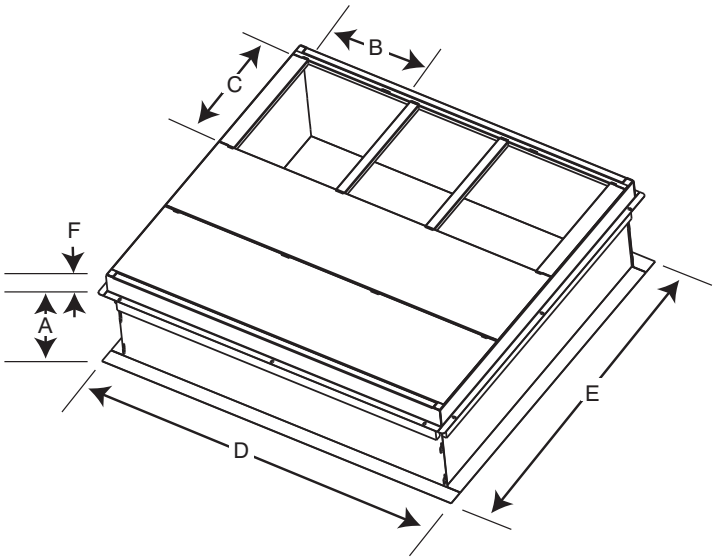

LARGE CURB

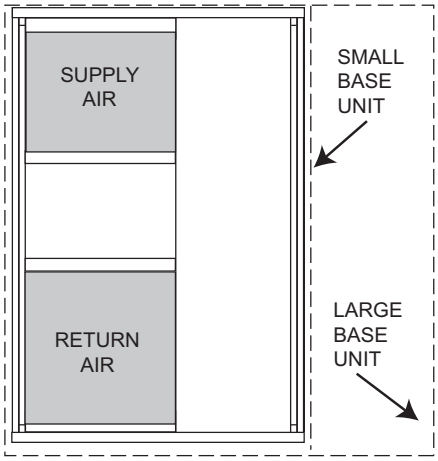

UNIT PLACEMENT ON COMMON CURB

SMALL OR LARGE BASE UNIT

UNIT SIZE	CATALOG NUMBER	A IN. (mm)	B (small base) IN. (mm)*	B (large base) IN. (mm)*	C IN. (mm)	D IN. (mm)	E IN. (mm)	F IN. (mm)
Small or Large	CPRFCURB010A00	11 (279)	10 (254)	14 (356)	16 (406)	47.8 (1214)	32.4 (822)	2.7 (69)
	CPRFCURB011A00	14 (356)						
Large	CPRFCURB012A00	11 (279)	14 (356)				43.9 (1116)	
	CPRFCURB013A00	14 (356)						

* Part Numbers CPRCURB010A00 and CPRCURB011A00 can be used on both small and large basepan units. The cross supports must be located based on whether the unit is a small basepan or a large basepan.

NOTES:

1. Roof curb must be set up for unit being installed.
2. Seal strip must be applied, as required, to unit being installed.
3. Roof curb is made of 16–gauge steel.
4. Attach ductwork to curb (flanges of duct rest on curb).
5. Insulated panels: 1–in. (25.4 mm) thick fiberglass 1 lb. density.

PGR5 ACCESSORIES (Continued)		
Accessory Model Number	**Description**	**Use With**
CURBS		
CPRFCURB010A00	Roof Curb, 11” High	24 – 60
CPRFCURB011A00	Roof Curb, 14” High	24 – 60
CPRFCURB012A00	Roof Curb, 11” High	36 – 60
CPRFCURB013A00	Roof Curb, 14” High	36 – 60
Note: CPRFCURB010A00 AND CPRFCURB011A00 can be used with 36–60 size units with some overhang.		
ADAPTER CURBS*		
CPADCURB001A00	Adapter curb for use with NPRFCURB006A00 & NPRFCURB007A00	24 – 30
CPADCURB002A00	Adapter curb for use with NPRFCURB008A00 & NPRFCURB009A00	36 – 60
* Can also be used when replacing other manufacturer’s older generation units that contain a composite base without a metal base rail.		
CONCENTRIC ADAPTERS – (Use with curb only)		
NPCONADP001A00	For 18” round duct (use with curbs CPRFCURB010A00, CPRFCURB011A00)	Small Curb
NPCONADP002A00	For 18” round duct (use with curbs CPRFCURB012A00, CPRFCURB013A00)	Large Curb
* A field supplied 18” to 16” round reducer required when used with NP concentric adaptor		
DAMPERS		
CPMANDPR007A00	Manual Outside Air Damper – (Includes filter rack and 1” filter, same as CPFILTRK kit)	24 – 30
CPMANDPR008A00		36 – 42
CPMANDPR009A00		48 – 60
ECONOMIZER		
ECD–SDSML–JC2–ADB*	Vertical economizer with Jade Honeywell W7220 controller, Honeywell communicating actuator, and dry bulb sensor. (Contact MicroMetl Customer Service at 1–800–662–4822 to order)	24 – 30
ECD–SDLGS–JC2–ADB*		36 – 42
ECD–SDLGB–JC2–ADB*		48 – 60
ECH–SDSML–JC2–ADB*	Horizontal economizer with Jade Honeywell W7220 controller, Honeywell communicating actuator, and dry bulb sensor. (Contact MicroMetl Customer Service at 1–800–662–4822 to order)	24 – 30
ECH–SDLGS–JC2–ADB*		36 – 42
ECH–SDLGB–JC2–ADB*		48 – 60
* Contact MicroMetl Customer Service at 1—800—662—4822 to order.		
INTERNAL FILTER RACKS		
CPFILTRK007A00	Internal Filter Rack (includes 1–inch filters)	24 – 30
CPFILTRK008A00		36 – 42
CPFILTRK009A00		48 – 60
LOW AMBIENT, ANTI–CYCLE, COMPRESSOR START ASSIST		
CPLOWAMB001A00	Low Ambient Control – enables cooling system to operate down to 0 Deg. F by cycling condenser fan on and off.	ALL
NRTIMEGD001A00	Five Minute Compressor Delay	ALL
CPHSTART002A00	PTC Compressor Start Assist Kit	ALL
CRANKCASE HEATERS (Factory installed on some models)		
CPCRKHTR0008A00	Crankcase Heater (single phase)	24 – 36
CPCRKHTR0004A00	Crankcase Heater (single and 3–phase)	42 – 48
GAS CONVERSION KITS		
NPLPCONV013B00	Natural to LP Conversion Kit (0 – 2000’)	ALL
NPLPCONV014B00	Natural to LP Conversion Kit (2001’ – 6000’)	ALL
NPNGCONV004B00	LP to Natural Gas Conversion Kit (0 – 2000’)	ALL
FLUE DISCHARGE DEFLECTOR		
CRFLUEDS001A00	Directs flue gas exhaust 90 degrees upward from current discharge. Designed to allow tighter distances between unit and combustible surfaces. 24 inch Height. AGA certified.	ALL
DUCT TRANSITIONS		
NPDUCFLG002A00	Square to Round (1 set of 2, use with horizontal duct flanges only)	24 – 48
THERMOSTATS		
TSTAT0406	Universal Programmable Thermostat, Dual Fuel compatible, 2–stage cool, 2–stage gas heat, 2–stage HP heat, 2–stage electric heat	ALL
TSTAT0408	Universal Programmable Thermostat with Humidity Sensing and Control, Dual Fuel compatible, 2-stage cool, 2-stage gas heat, 2-stage HP heat, 2-stage electric heat.	ALL
TSTAT0101SC	Observer Communicating Touchscreen Thermostat with Humidity Sensing and Control, Dual Fuel compatible, 2-stage cool, 2-stage gas heat, 2-stage HP heat, 2-stage electric heat.	ALL
NAXA00101DB	Daughter Board, use with communicating thermostat TSTAT0101SC and non-communicating equipment	ALL

2013 Copyright International Comfort Products
Lewisburg, Tennessee 37091 USA
www.GoHeil.com

Specifications subject to change without notice.