Up to 14.0 SEER
PACKAGE AIR CONDITIONER
2 to 5 TONS
Single Phase, 208/230 V, 60 Hz

GRANDAIRE®
Heating & Cooling Products

WPA4

c UL US LISTED

AHRI CERTIFIED™ www.ahridirectory.org

Use of the AHRI Certified TM Mark indicates a manufacturer's participation in the program. For verification of certification for individual products, go to www.ahridirectory.org .

UNIT PERFORMANCE DATA

Model Number	COOLING			Unit Dimensions Height x Width x Depth in (mm)	Operating Weight lbs (kg)
	Capacity BTU/h	SEER	EER		
WPA4244000RKB	23,000	14.0	11.5	$43^3/_4$ x $48^3/_{16}$ x $32^5/_8$ (1111 x 1224 x 829)	304 (138)
WPA4304000RKB	28,600	14.0	11.5	$45^3/_4$ x $48^3/_{16}$ x $32^5/_8$ (1162 x 1224 x 829)	336 (152)
WPA4364000RKB	34,800	14.0	11.5	$51^3/_4$ x $48^3/_{16}$ x $32^5/_8$ (1315 x 1224 x 829)	349 (158)
WPA4424000RKB	40,000	14.0	11.5	$44^3/_4$ x $48^1/_4$ x $44^3/_{16}$ (1137 x 1226 x 1123)	413 (187)
WPA4484000RKB	46,000	14.0	11.5	$52^3/_4$ x $48^1/_4$ x $44^3/_{16}$ (1340 x 1226 x 1123)	438 (199)
WPA4604000RKB	56,000	14.0	11.5	$54^3/_4$ x $48^1/_4$ x $44^3/_{16}$ (1391 x 1226 x 1123)	455 (206)

REFRIGERATION CIRCUIT
- Environmentally sound R−410A refrigerant
- Copper tube/aluminum fin condenser and evaporator coils

EASY TO INSTALL AND SERVICE
- Installs easily on a rooftop or at ground level
- Easy three−panel accessibility for maintenance and installation
- Easily converts to down discharge applications

BUILT TO LAST
- Pre-painted steel cabinet
- High efficiency ECM indoor blower motor on all models
- Vertical condenser fan discharge
- Full perimeter steel base rails
- High pressure switch provides added reliability for the compressor

LIMITED WARRANTY *
- 1 year unit replacement limited warranty
- 10 year parts limited warranty (including compressor and coils) with timely registration
- 5 year parts limited warranty if not registered within 90 days of original installation

* See warranty certificate for complete details and restrictions

Product Specifications

MODEL NUMBER NOMENCLATURE

MODEL NOMENCLATURE

Digit Position:	1, 2	3	4	5, 6	7	8,9,10	11	12	13	14
Example Part Number:	WP	A	4	36	4	000	R	K	B	1

WP = Package

A = Air Conditioner
H = Heat Pump
G = Gas/Electric **TYPE**

4 = 14 **SEER**

24 = 24,000 BTUH = 2 Tons
30 = 30,000 BTUH = 2.5 Tons
36 = 36,000 BTUH = 3 Tons
42 = 42,000 BTUH = 3.5 Tons
48 = 48,000 BTUH = 4 Tons **NOMINAL**
60 = 60,000 BTUH = 5 Tons **COOLING BTUH**

2 = R−22
4 = R−410A **REFRIGERANT**

000 = no gas heat (use accessory electric heater)
NOMINAL HEATING BTUH

R = Regular
L = Low NOx Combustion (WPG models only) **FEATURES**

K = 208/230−1−60 **VOLTAGE**

Sales Model Digit

Engineering Digit

AHRI* CAPACITIES

Cooling Capacities and Efficiencies

UNIT SIZE	NOMINAL TONS	STANDARD CFM	COOLING CAPACITY	EER	SEER
24	2	800	23000	11.5	14.0
30	2.5	1000	28600	11.5	14.0
36	3	1150	34800	11.5	14.0
42	3.5	1350	40000	11.5	14.0
48	4	1550	46000	11.5	14.0
60	5	1750	56000	11.5	14.0

LEGEND
dB−Sound Levels (decibels)
db—Dry Bulb
SEER—Seasonal Energy Efficiency Ratio
wb—Wet Bulb
COP−Coefficient of Performance
* Air Conditioning, Heating & Refrigeration Institute.
**At "A" conditions−80°F (26.7°C) indoor db/67°F (19.4°C) indoor wb & 95°F (35°C) outdoor db.
† Rated in accordance with U.S. Government DOE Department of Energy) test procedures and/or AHRI Standards 210/240.

Notes:
1. Ratings are net values, reflecting the effects of circulating fan heat. Ratings are based on:
Cooling Standard: 80°F (26.7°C) db, 67°F wb (19.4°C) indoor entering−air temperature and 95°F db (35°C) outdoor entering−air temperature.
2. Before purchasing this appliance, read important energy cost and efficiency information available from your retailer.

A−Weighted Sound Power Level (dBA)

UNIT SIZE	SOUND RATING	TYPICAL OCTAVE BAND SPECTRUM (dBA without tone adjustment)						
		125	250	500	1000	2000	4000	8000
24	**73**	54.3	61.3	55.2	54.8	57.1	53.6	43.1
30	**73**	58.1	59.4	61.2	64.1	59.2	56.8	50.9
36	**74**	58.7	62.8	65.7	67.8	63.7	58.9	51.7
42	**74**	54.4	59.0	61.2	62.1	58.9	53.5	46.7
48	**73**	57.1	57.6	60.5	62.7	58.2	56.4	50.7
60	**76**	64.4	59.7	59.6	60.6	59.8	55.5	47.8

NOTE: Tested in accordance with AHRI Standard 270−1995 (not listed in AHRI).

PHYSICAL DATA

UNIT SIZE	24	30	36	42	48	60
NOMINAL CAPACITY (ton)	2	2−1/2	3	3−1/2	4	5
SHIPPING WEIGHT lb. **SHIPPING WEIGHT (kg)**	329 149	361 164	390 177	455 206	480 218	497 225
COMPRESSORS	Rotary	Reciprocating	Scroll			
Quantity	1					
REFRIGERANT (R−410A) Quantity lb Quantity (kg)	 5.3 2.4	 5.5 2.5	 8.2 3.7	 6.2 2.8	 9.2 4.2	 9.8 4.5
REFRIGERANT METERING DEVICE	Orifice		TXV	Orifice		
ORIFICE ID in./mm	.059 / 1.5	.061 / 1.55	N/A	.073 / 1.85	.080 / 2.03	.084 / 2.14
OUTDOOR COIL Rows...Fins/in. Face Area (sq ft)	 1...21 11.9	 1...21 13.6	 1...21 18.8	 1...21 13.6	 1...21 21.4	 1...21 23.3
OUTDOOR FAN Nominal Cfm Diameter in. Diameter (mm) Motor Hp (Rpm)	 2500 24 609.6 1/12 (810)	 2700 24 609.6 1/10 (810)	 3200 24 609.6 1/5 (810)	 3600 26 660.4 1/5 (810)	 3600 26 660.4 1/5 (810)	 4200 26 660.4 1/5 (810)
INDOOR COIL Rows...Fins/in. Face Area (sq ft)	 3...17 3.7	 3...17 3.7	 3...17 3.7	 3...17 4.7	 3...17 4.7	 3...17 5.6
INDOOR BLOWER Nominal Cooling Airflow (Cfm) Size in. Size (mm.) Motor HP (RPM)	 800 10x10 254x254 1/2 (1050)	 1000 10x10 254x254 1/2 (1050)	 1150 11x10 279.4x254 3/4 (1000)	 1350 11x10 279.4x254 1/2 (1075)	 1550 11x10 279.4x254 1.0 (1075)	 1750 11x10 279.4x254 1.0 (1040)
HIGH−PRESSURE SWITCH (psig) Cut−out Reset (Auto)	650 +/− 15 420 +/− 25					
LOSS−OF−CHARGE / LOW−PRESSURE SWITCH (psig) cut−out Reset (auto)	20 +/− 5 45 +/− 10	N/A				
RETURN−AIR FILTERS†‡ Throwaway Size in. Throwaway Size (mm)	 2 each 20x12x1 508x305x25			1 each 24x14x1 610x356x25 24x15x1 610x406x25		1 each 24x16x1 610x406x25 24x18x1 610x457x25

† Required filter sizes shown are based on the larger of the AHRI (Air Conditioning Heating and Refrigeration Institute) rated cooling airflow or the heating airflow velocity of 300 to 350 ft/minute for throwaway type or 450 ft/minute for high−capacity type. Air filter pressure drop for non−standard filters must not exceed 0.08 in. W.C.

‡ If using accessory filter rack refer to the filter rack installation instructions for correct filter sizes and quantity.

Electric Heat Pressure Drop Tables (IN. W.C.)
Small Cabinet: 24−36

STATIC	CFM											
	500	600	700	800	900	1000	1100	1200	1300	1400	1500	1600
5 kW	0.00	0.00	0.00	0.00	0.00	0.00	0.00	0.00	0.02	0.04	0.06	0.07
10 kW	0.00	0.00	0.00	0.00	0.00	0.02	0.04	0.06	0.07	0.09	0.10	0.11
15 kW	0.00	0.00	0.00	0.02	0.04	0.06	0.08	0.10	0.12	0.14	0.16	0.18
20 kW	0.00	0.00	0.02	0.04	0.06	0.08	0.09	0.11	0.13	0.15	0.17	0.19

Large Cabinet: 42−60

STATIC	CFM														
	1100	1200	1300	1400	1500	1600	1700	1800	1900	2000	2100	2200	2300	2400	2500
5 kW	0.00	0.00	0.00	0.01	0.02	0.03	0.04	0.05	0.06	0.07	0.08	0.09	0.10	0.11	0.12
10 kW	0.00	0.00	0.01	0.02	0.03	0.04	0.05	0.06	0.07	0.08	0.09	0.10	0.11	0.12	0.13
15 kW	0.00	0.02	0.03	0.04	0.05	0.06	0.07	0.08	0.09	0.10	0.11	0.12	0.13	0.14	0.15
20 kW	0.02	0.03	0.04	0.05	0.06	0.07	0.08	0.09	0.10	0.11	0.12	0.13	0.14	0.15	0.16

OPTIONS AND ACCESSORIES

ITEM	DESCRIPTION	FACTORY INSTALLED OPTION	FIELD INSTALLED ACCESSORY
Compressor Start Kit	Compressor Start Kit assists compressor start−up by providing additional starting torque on single phase units only.		X
Corporate Thermostats	Thermostats provide control for the system heating and cooling functions.		X
Crankcase Heater	Crankcase Heater provides anti−floodback protection for low−load cooling applications.		X*
Economizer	Horizontal Economizer with solid state controls and barometric relief dampers includes filter racks and provide outdoor air during cooling and reduce compressor operation.		X
	Vertical Economizer with solid state controls and barometric relief dampers includes filter racks and provide outdoor air during cooling and reduce compressor operation.		X
Electric Heaters	Electric Heat Supplement		X
Filter Rack	Filter Rack features easy installation, serviceability, and high−filtering performance for vertical applications. Includes 1−in. filter.		X
Flat Roof Curbs	Flat Roof Curbs in both 11−in (279 mm) and 14−in. (356 mm) sizes are available for roof mounted applications.		X
Low Ambient Kit	Low Ambient Kit (Motormaster II Control) allows the use of mechanical cooling down to outdoor temperatures as low as 0°F (−18°C) when properly installed.		X
Manual Outside Air Damper	Manual Outside Air Damper includes hood and filter rack with adjustable damper blade for up to 25% outdoor air.		X
Square−to−Round Duct Transition Kit	Square−to−Round Duct Transition Kit enable 24−48 size units to be fitted to 14 in (356 mm). round ductwork.		X
Dual Point Electric Heaters	Allows you to power the electric heater and unit contactor separately by having two individual field power supply circuits connected respectively.		X
Outdoor Coil Dense Metal Wire Grille	3/8” spacing Dense Metal Wire Grille provide hail and vandalism protection.		X
Low Pressure Switch Kit	This kit is designed for use when a low pressure control is desired.		X

Electric Heaters

CATALOG ORDERING NO.	NOMINAL CAPACITY (kW)	FUSE QTY	USED WITH SIZES					
			24	30	36	42	48	60
ELECTRIC HEATERS (208/230 — SINGLE PHASE — 60 Hz)								
CPHEATER052A0*	5.0	–	X	X	X	X	X	X
CPHEATER064A0*	5.0	4	X	X	X	X	X	X
CPHEATER069A0*	7.2	–	X	X	X	X	X	X
CPHEATER070A0*	7.2	4	X	X	X	X	X	X
CPHEATER065A0*	10.0	–	X	X	X	X		
CPHEATER050A0*	10.0	4	X	X	X	X	X	X
CPHEATER051A0*	15.0	4		X	X	X		
CPHEATER066A0*	15.0	6		X	X	X	X	X
CPHEATER053A0*	20.0	6				X		
CPHEATER054A0*	20.0	6				X	X	X

NOTE: Electric heaters are rated at 240v. Refer to Multiplication Factors table for other voltages.
X = Approved combinations.

Minimum Airflow for Safe Electric Heater Operation (CFM)

SIZE	24	30	36	42	48	60
Cfm	800	1000	1200	1400	1600	1750

Specifications subject to change without notice.

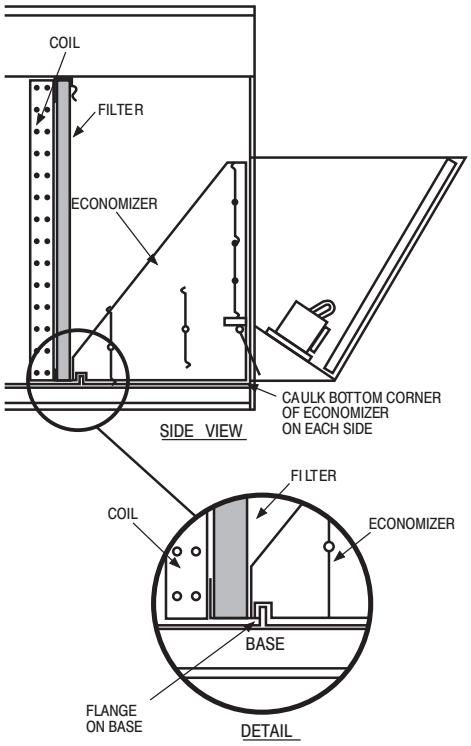

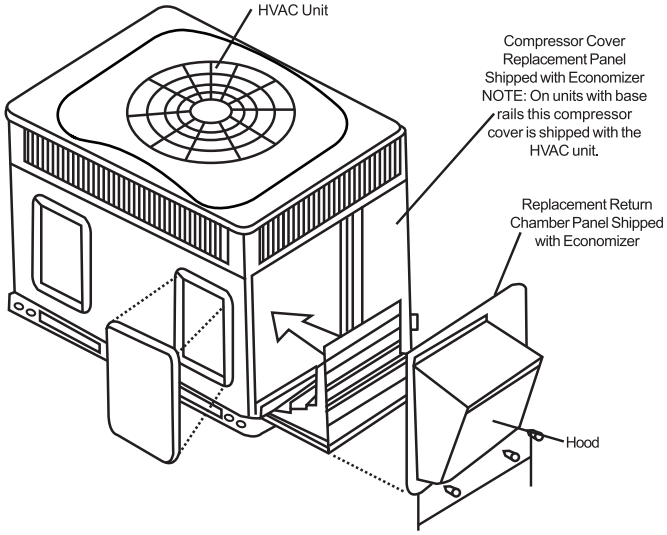

Vertical Economizer

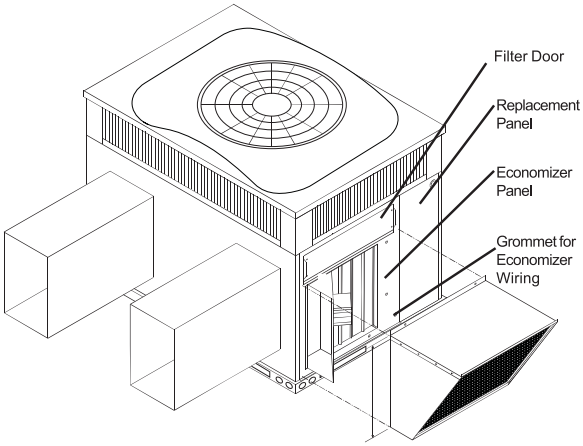

Horizontal Economizer

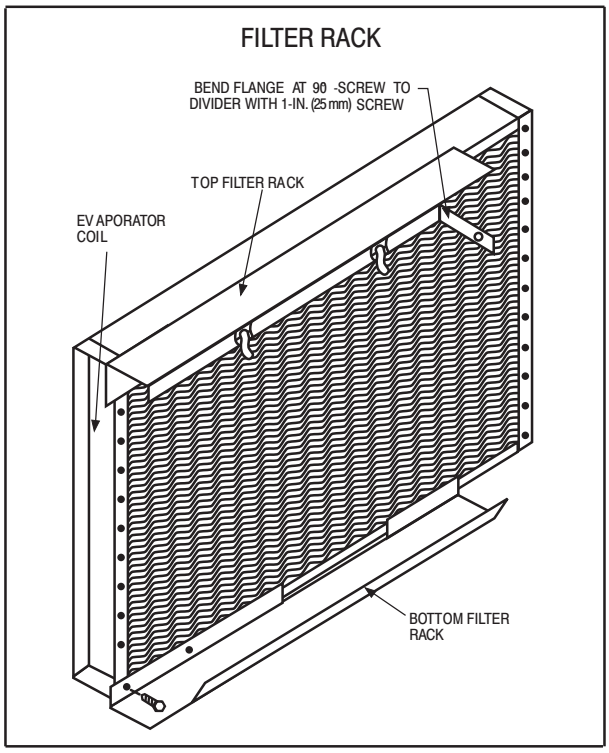

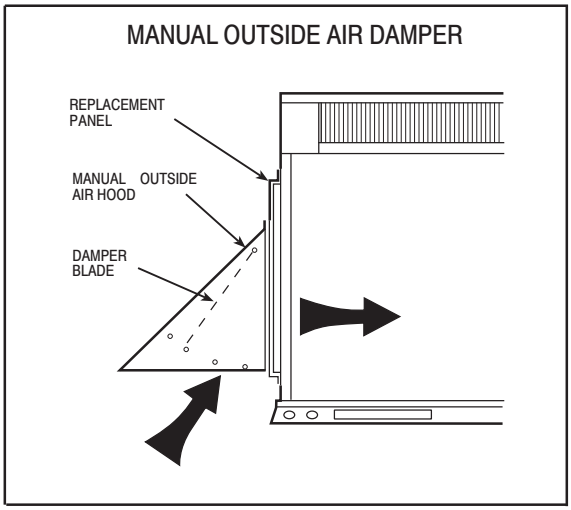

A09375

Specifications subject to change without notice.

UNIT DIMENSIONS – 24–36

UNIT	ELECTRICAL CHARACTERISTICS	UNIT WT.		UNIT HEIGHT		CENTER OF GRAVITY IN/MM					
		LB	KG	"A"		X		Y		Z	
WPA424000RKB1	208/230-1-60	304	138.0	43-3/4	1111	20-1/2	520.7	15-3/4	400.1	16-1/2	419.1
WPA430000RKB1	208/230-1-60	336	152.0	45-3/4	1162	20-1/2	520.7	15-3/4	400.1	16-13/16	427.0
WPA436000RKB1	208/230-1-60	349	158.0	51-3/4	1315	20-1/2	520.7	15-3/4	400.1	17	431.8

UNIT	VOLTAGE	CORNER WEIGHT LB/KG							
		"1"		"2"		"3"		"4"	
24	208/230	45.6	20.7	60.8	27.6	91.2	41.4	106.4	48.3
30	208/230	50.4	22.9	67.2	30.5	100.8	45.7	117.6	53.3
36	208/230	52.4	23.7	69.8	31.7	104.7	47.5	122.2	55.4

REQUIRED CLEARANCES TO COMBUSTIBLE MATL.

	INCHES [MM]
TOP OF UNIT	14 [355.6]
DUCT SIDE OF UNIT	2 [50.8]
SIDE OPPOSITE DUCTS	14 [355.6]
BOTTOM OF UNIT	0 [0.0]
ELECTRICAL PANEL	36 [914.4]

NEC. REQUIRED CLEARANCES.

	INCHES [MM]
BETWEEN UNITS, POWER ENTRY SIDE	42 [1066.8]
UNIT AND UNGROUNDED SURFACES, POWER ENTRY SIDE	36 [914.0]
UNIT AND BLOCK OR CONCRETE WALLS AND OTHER GROUNDED SURFACES, POWER ENTRY SIDE	42 [1066.8]

REQUIRED CLEARANCE FOR OPERATION AND SERVICING

	INCHES [MM]
EVAP. COIL ACCESS SIDE	36 [914.0]
POWER ENTRY SIDE	42 [1066.8]
(EXCEPT FOR NEC REQUIREMENTS)	
UNIT TOP	48 [1219.2]
SIDE OPPOSITE DUCTS	36 [914.0]
DUCT PANEL	12 [304.8]*

*MINIMUM DISTANCES: IF UNIT IS PLACED LESS THAN 12 [304.8] FROM WALL SYSTEM, THEN SYSTEM PERFORMANCE MAYBE COMPROMISED.

DIMENSIONS IN [ ] ARE IN MILLIMETERS

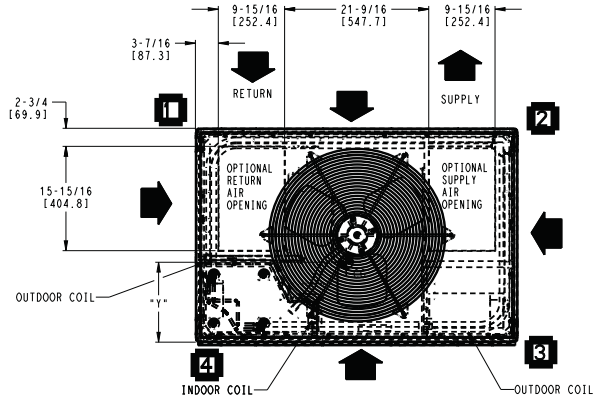

TOP VIEW

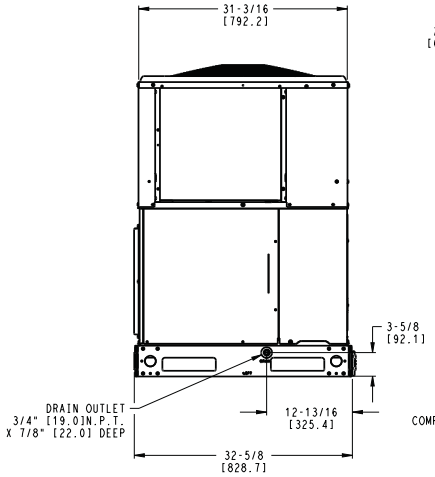

LEFT SIDE VIEW

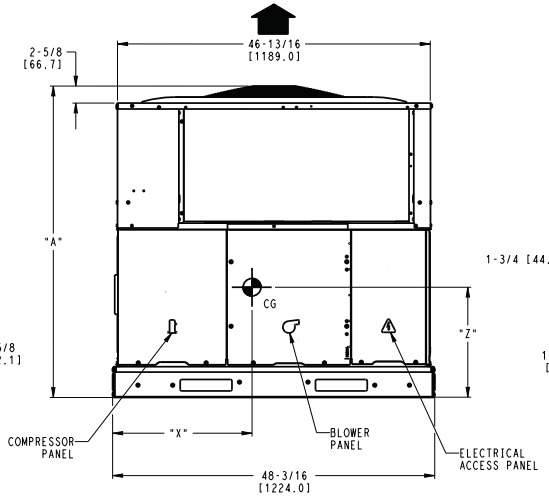

FRONT VIEW

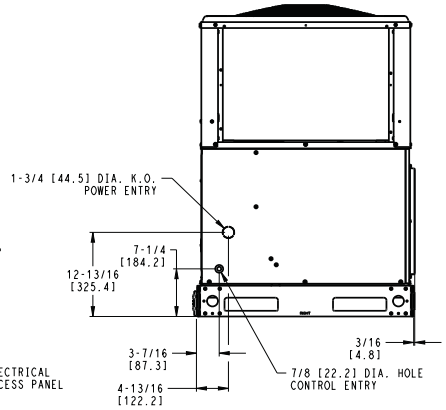

RIGHT SIDE VIEW

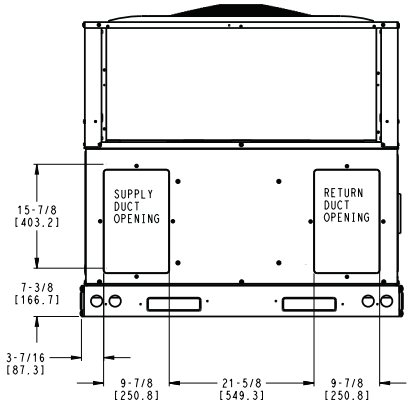

REAR VIEW

50CY502928	_

Specifications subject to change without notice.

519 55 7101 01

A160006

UNIT DIMENSIONS – 42–60

UNIT	ELECTRICAL CHARACTERISTICS	UNIT WT.		UNIT HEIGHT		CENTER OF GRAVITY IN/MM					
		LB	KG	"A"		X		Y		Z	
WPA4424000RKB1	208/230-1-60	413	187.0	44-3/4	1137	44-3/4	1137	17-1/2	444.5	17-1/8	435.0
WPA4484000RKB1	208/230-1-60	438	199.0	52-3/4	1340	46-3/4	1187	17-1/2	444.5	17-3/8	441.3
WPA4604000RKB1	208/230-1-60	455	206.0	54-3/4	1391	46-3/4	1187	17-1/2	444.5	17-5/8	447.7

UNIT	VOLTAGE	CORNER WEIGHTS LB/KG							
		"1"		"2"		"3"		"4"	
42	208/230	62.0	28.1	82.6	37.5	123.9	56.2	144.6	65.6
48	208/230	65.7	29.8	87.6	39.7	131.4	59.6	153.3	69.5
60	208/230	68.3	31.0	91.0	41.3	136.5	61.9	159.3	72.2

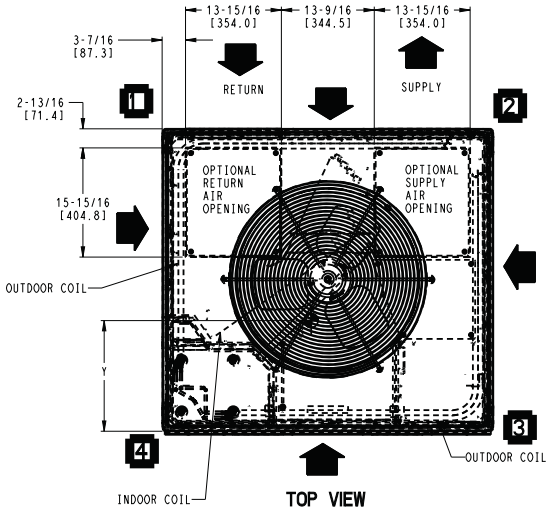

TOP VIEW

REQUIRED CLEARANCES TO COMBUSTIBLE MATL.

	INCHES [MM]
TOP OF UNIT	14 [355.6]
DUCT SIDE OF UNIT	2 [50.8]
SIDE OPPOSITE DUCTS	14 [355.6]
BOTTOM OF UNIT	0 [0.0]
ELECTRICAL PANEL	36 [914.4]

NEC. REQUIRED CLEARANCES.

	INCHES [MM]
BETWEEN UNITS, POWER ENTRY SIDE	42 [1066.8]
UNIT AND UNGROUNDED SURFACES, POWER ENTRY SIDE	36 [914.0]
UNIT AND BLOCK OR CONCRETE WALLS AND OTHER GROUNDED SURFACES, POWER ENTRY SIDE	42 [1066.8]

REQUIRED CLEARANCE FOR OPERATION AND SERVICING

	INCHES [MM]
EVAP. COIL ACCESS SIDE	36 [914.0]
POWER ENTRY SIDE	42 [1066.8]
(EXCEPT FOR NEC REQUIREMENTS)	
UNIT TOP	48 [1219.2]
SIDE OPPOSITE DUCTS	36 [914.0]
DUCT PANEL	12 [304.8]*

*MINIMUM DISTANCES: IF UNIT IS PLACED LESS THAN 12 [304.8] FROM WALL SYSTEM, THEN SYSTEM PERFORMANCE MAYBE COMPROMISED.
DIMENSIONS IN [] ARE IN MM

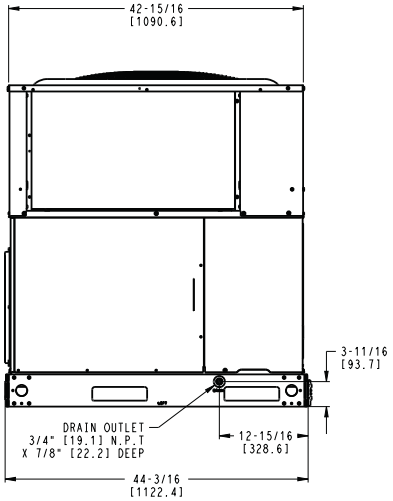

LEFT SIDE VIEW

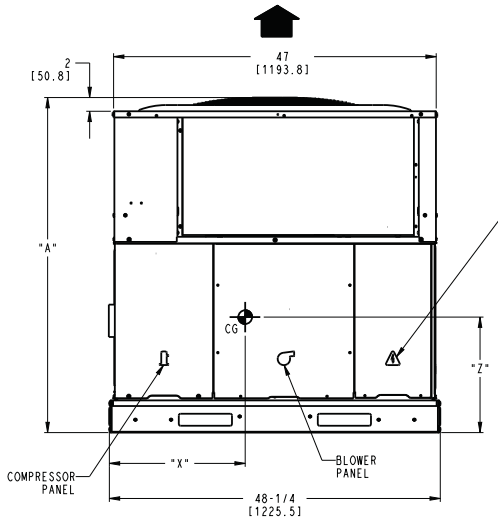

FRONT VIEW

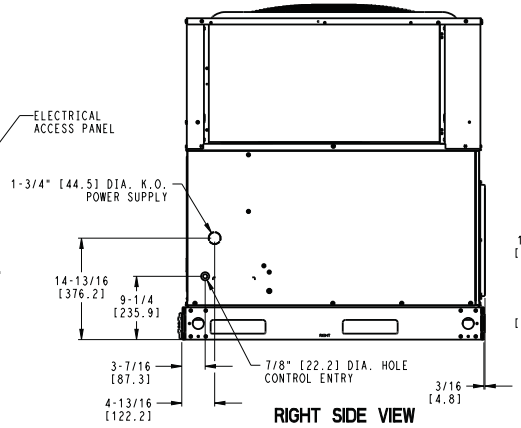

RIGHT SIDE VIEW

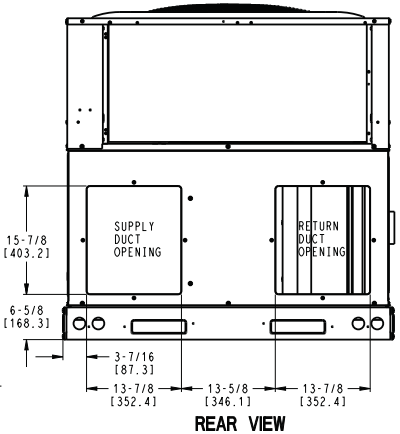

REAR VIEW

50CY502929 | -

ROOF CURB ACCESSORY − 24−60

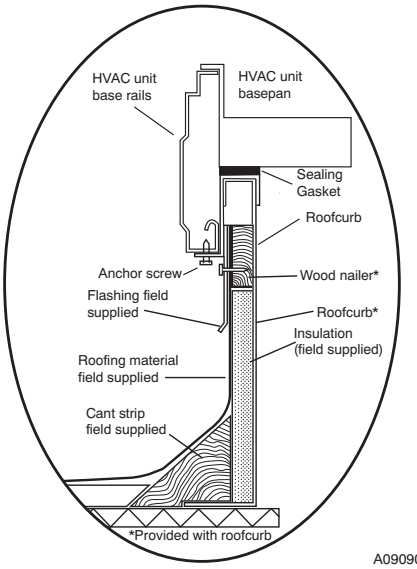

ROOF CURB DETAIL

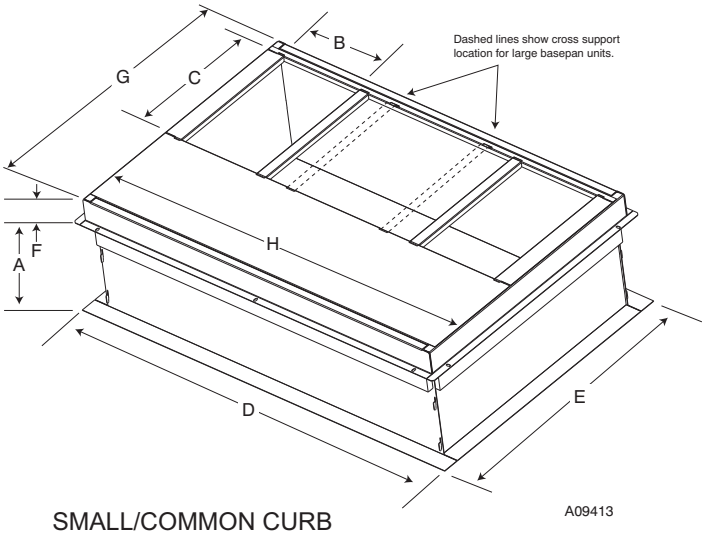

SMALL/COMMON CURB

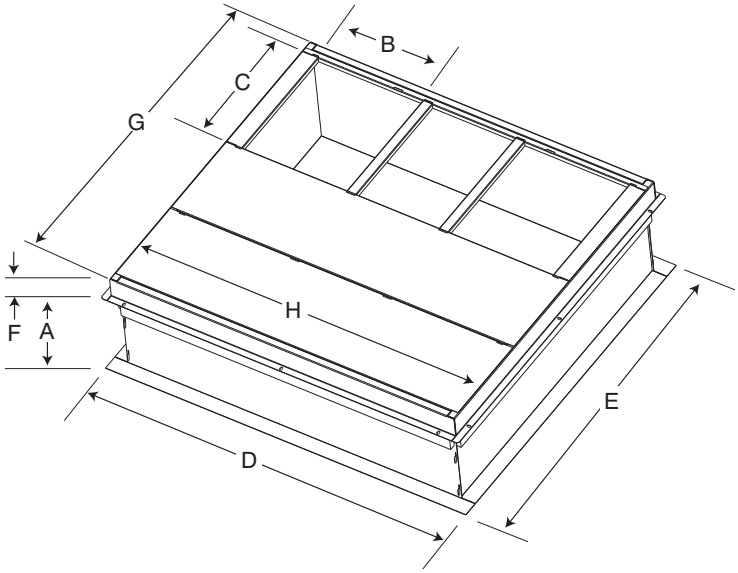

LARGE CURB

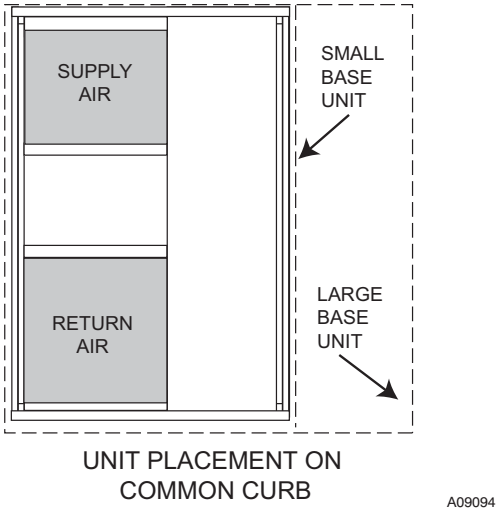

UNIT PLACEMENT ON COMMON CURB

SMALL OR LARGE BASE UNIT

A09414

UNIT SIZE	CATALOG NUMBER	A IN. (mm)	B (small/common base) IN. (mm)*	B (large base) IN. (mm)*	C IN. (mm)	D IN. (mm)	E IN. (mm)	F IN. (mm)	G IN. (mm)	H IN. (mm)
Small or Large	CPRFCURB011A00	14 (356)	10 (254)	14 (356)	16 (406)	47.8 (1214)	32.4 (822)	2.7 (69)	30.6 (778)	46.1 (1170)
Large	CPRFCURB013A00	14 (356)	14 (356)				43.9 (1116)		42.2 (1072)	

* Part Numbers CPRCURB011A00 can be used on both small and large basepan units. The cross supports must be located based on whether the unit is a small basepan or a large basepan.

NOTES:

1. Roof curb must be set up for unit being installed.
2. Seal strip must be applied, as required, to unit being installed.
3. Roof curb is made of 16−gauge steel.
4. Attach ductwork to curb (flanges of duct rest on curb).
5. Insulated panels: 1−in. (25.4 mm) thick fiberglass 1 lb. density.

SELECTION PROCEDURE (WITH EXAMPLE)

1. Determine cooling and heating requirements at design conditions:

Given:

Required Cooling Capacity (TC) . . . . . 34,000 Btuh

Sensible Heat Capacity (SHC) . . . . . 24,000 Btuh

Required Heating Capacity . . . . . 12,500 Btuh

Condenser Entering Air Temperature . . . . 95°F(35°C)

Indoor−Air Temperature . . . . . 80°F (26°C) edb
67°F (19°C) ewb

Evaporator Air Quantity . . . . . 1200 CFM

External Static Pressure . . . . . 0.20 IN. W.C.

Electrical Characteristics . . . . . 230−1−60

2. Select unit based on required cooling capacity.

Enter Net Cooling Capacities table at condenser entering temperature of 95°F (35°C), indoor air entering at 1200 cfm and 67°F (19°C) ewb (entering wet bulb). The unit will provide a total capacity of 34,200 Btuh and a SHC of 24,500 Btuh.

3. Select electric heat.

The required heating capacity is 15,000 Btuh.

Determine additional electric heat capacity in kW.

$$\frac{15{,}000 \text{ Btuh}}{3{,}414 \text{ Btuh/kW}} = 4.4\text{kW of heat required}$$

Enter the electric Heater Packages table for 208/240, single−phase, 36 unit. The 5 kW heater at 240v most closely satisfies the heating required. To calculate kW at the 208v, multiply the heater kW by multiplication factor 0.75 found in the Wattage Multiplication Factors table.

5 kW x 0.75 = 3.75 kW

3.75 kW x 3414 = 12802.50 Btuh

4. Determine fan speed and power requirements at design conditions.

Before entering the air delivery tables, calculate the total static pressure required. From the given example, the Wet Coil Pressure Drop Table, and the Filter Pressure Drop Table:

External Static Pressure	0.200 IN. W.C.
Filter	0.000 IN. W.C.
Wet Coil Pressure Drop	0.130 IN. W.C.
Total Static Pressure	0.330 IN. W.C.

Enter the table for Wet Coil Air Delivery—horizontal discharge, 230. At 0.33 IN. W.C. ESP (external static pressure) and medium speed, the fan will deliver 1293 cfm. Adjusting for 208v, the motor delivers 114 cfm (deduct 10%).

5. Select unit that corresponds to power source available.

The Electrical Data Table shows that the unit is designed to operate at 208−1−60.

Specifications subject to change without notice.

PERFORMANCE DATA

24 SIZE

EVAPORATOR AIR		CONDENSER ENTERING AIR TEMPERATURES °F (°C)																	
		75 (23.9)			85 (29.4)			95 (35)			105 (40.6)			115 (46.1)			125 (51.7)		
CFM	EWB F (°C)	Capacity MBtuh Total	Capacity MBtuh Sens	Total Sys KW	Capacity MBtuh Total	Capacity MBtuh Sens	Total Sys KW	Capacity MBtuh Total	Capacity MBtuh Sens	Total Sys KW	Capacity MBtuh Total	Capacity MBtuh Sens	Total Sys KW	Capacity MBtuh Total	Capacity MBtuh Sens	Total Sys KW	Capacity MBtuh Total	Capacity MBtuh Sens	Total Sys KW
700	57 (13.8)	23.62	23.62	1.55	21.90	21.90	1.75	20.07	20.07	1.95	17.88	17.88	2.14	15.87	15.87	2.38	14.01	14.01	2.64
	62 (16.6)	24.47	21.38	1.56	22.45	20.24	1.75	20.32	19.02	1.96	17.92	17.92	2.14	15.90	15.90	2.38	14.03	14.03	2.64
	63* (17.2)	24.99	17.43	1.56	22.88	16.39	1.76	20.71	15.32	1.96	18.05	14.06	2.15	15.56	12.87	2.36	13.28	11.77	2.61
	67 (19.4)	27.02	18.13	1.55	24.79	17.09	1.76	22.51	16.03	1.98	19.92	14.86	2.20	17.28	13.67	2.42	14.91	12.59	2.67
	72 (22.2)	29.59	14.70	1.55	27.20	13.77	1.76	24.84	12.86	1.99	22.48	11.95	2.24	19.68	10.89	2.51	17.14	9.92	2.77
800	57 (13.8)	24.74	24.74	1.57	22.92	22.92	1.77	21.02	21.02	1.99	18.78	18.78	2.19	16.65	16.65	2.42	14.70	14.70	2.69
	62 (16.6)	25.14	23.06	1.57	23.07	21.80	1.78	21.05	21.05	1.99	18.81	18.81	2.19	16.68	16.68	2.42	14.72	14.72	2.69
	63* (17.2)	25.59	18.60	1.57	23.43	17.53	1.77	21.18	16.43	1.99	18.51	15.14	2.18	15.93	13.90	2.39	13.61	12.73	2.64
	67 (19.4)	27.63	19.36	1.56	25.32	18.28	1.77	23.00	17.20	2.00	20.41	16.03	2.24	17.67	14.78	2.45	15.25	13.64	2.71
	72 (22.2)	30.16	15.42	1.56	27.69	14.48	1.77	25.27	13.55	2.01	22.88	12.64	2.26	20.12	11.62	2.53	17.47	10.60	2.80
900	57 (13.8)	25.69	25.69	1.58	23.77	23.77	1.79	21.80	21.80	2.01	19.55	19.55	2.23	17.32	17.32	2.46	15.29	15.29	2.73
	62 (16.6)	25.74	25.74	1.58	23.81	23.81	1.79	21.84	21.84	2.01	19.58	19.58	2.23	17.35	17.35	2.46	15.31	15.31	2.73
	63* (17.2)	26.07	19.72	1.58	23.84	18.62	1.79	21.55	17.49	2.01	18.84	16.17	2.20	16.24	14.87	2.42	13.92	13.92	2.67
	67 (19.4)	28.08	20.52	1.58	25.72	19.42	1.79	23.37	18.31	2.02	20.82	17.17	2.26	17.98	15.84	2.48	15.54	14.63	2.74
	72 (22.2)	30.58	16.10	1.58	28.07	15.15	1.79	25.58	14.21	2.02	23.17	13.29	2.28	20.45	12.30	2.56	17.73	11.25	2.83

See Legend and Notes on Page16.

Specifications subject to change without notice.

PERFORMANCE DATA (CONT)

30 SIZE

EVAPORATOR AIR		CONDENSER ENTERING AIR TEMPERATURES °F (°C)																	
		75 (23.9)			85 (29.4)			95 (35)			105 (40.6)			115 (46.1)			125 (51.7)		
CFM	EWB F (°C)	Capacity MBtuh Total	Capacity MBtuh Sens	Total Sys KW	Capacity MBtuh Total	Capacity MBtuh Sens	Total Sys KW	Capacity MBtuh Total	Capacity MBtuh Sens	Total Sys KW	Capacity MBtuh Total	Capacity MBtuh Sens	Total Sys KW	Capacity MBtuh Total	Capacity MBtuh Sens	Total Sys KW	Capacity MBtuh Total	Capacity MBtuh Sens	Total Sys KW
875	57 (13.8)	29.53	29.53	1.96	27.08	27.08	2.16	24.69	24.69	2.37	22.28	22.28	2.58	19.59	19.59	2.78	16.70	16.70	2.97
	62 (16.6)	30.79	26.57	1.97	27.80	24.83	2.18	24.94	23.09	2.38	22.32	22.32	2.58	19.63	19.63	2.78	16.73	16.73	2.98
	63* (17.2)	31.48	21.67	1.98	28.41	20.10	2.19	25.42	18.58	2.39	22.40	17.07	2.58	18.92	15.39	2.74	15.25	13.63	2.90
	67 (19.4)	34.28	22.60	1.99	31.11	21.08	2.22	27.95	19.57	2.45	24.83	18.09	2.67	21.50	16.55	2.87	17.54	14.78	3.02
	72 (22.2)	37.52	18.32	2.02	34.41	17.04	2.25	31.17	15.74	2.49	27.94	14.44	2.73	24.64	13.15	2.98	20.76	11.69	3.20
1000	57 (13.8)	31.03	31.03	2.01	28.44	28.44	2.22	25.91	25.91	2.44	23.40	23.40	2.66	20.68	20.68	2.87	17.58	17.58	3.06
	62 (16.6)	31.72	28.62	2.01	28.67	26.73	2.23	25.96	25.96	2.45	23.44	23.44	2.67	20.72	20.72	2.87	17.61	17.61	3.06
	63* (17.2)	32.32	23.12	2.01	29.14	21.51	2.23	26.02	19.93	2.44	22.95	18.37	2.64	19.44	16.64	2.80	15.73	15.73	2.96
	67 (19.4)	35.07	24.07	2.03	31.85	22.55	2.26	28.60	21.00	2.49	25.37	19.46	2.72	21.99	17.88	2.94	17.99	16.02	3.08
	72 (22.2)	38.18	19.12	2.05	35.03	17.87	2.29	31.75	16.57	2.53	28.42	15.25	2.78	25.07	13.95	3.02	21.25	12.54	3.27
1125	57 (13.8)	32.29	32.29	2.04	29.60	29.60	2.27	26.94	26.94	2.50	24.33	24.33	2.73	21.55	21.55	2.96	18.32	18.32	3.14
	62 (16.6)	32.53	30.43	2.05	29.65	29.65	2.27	26.98	26.98	2.50	24.37	24.37	2.73	21.59	21.59	2.96	18.35	18.35	3.14
	63* (17.2)	32.95	24.48	2.05	29.71	22.85	2.27	26.51	21.21	2.49	23.38	19.60	2.70	19.89	17.80	2.86	16.36	16.36	3.03
	67 (19.4)	35.66	25.45	2.06	32.37	23.93	2.29	29.08	22.34	2.53	25.80	20.77	2.76	22.40	19.14	2.99	18.47	18.31	3.15
	72 (22.2)	38.66	19.84	2.08	35.48	18.63	2.32	32.15	17.34	2.57	28.78	16.01	2.82	25.36	14.70	3.07	21.59	13.33	3.31

See Legend and Notes on Page16.

Specifications subject to change without notice.

PERFORMANCE DATA (CONT)

36 SIZE

EVAPORATOR AIR		CONDENSER ENTERING AIR TEMPERATURES °F (°C)																	
		75 (23.9)			85 (29.4)			95 (35)			105 (40.6)			115 (46.1)			125 (51.7)		
CFM	EWB F (°C)	Capacity MBtuh		Total Sys KW	Capacity MBtuh		Total Sys KW	Capacity MBtuh		Total Sys KW	Capacity MBtuh		Total Sys KW	Capacity MBtuh		Total Sys KW	Capacity MBtuh		Total Sys KW
		Total	Sens		Total	Sens		Total	Sens		Total	Sens		Total	Sens		Total	Sens	
1000	57 (13.8)	34.58	34.58	2.40	32.46	32.46	2.66	30.31	30.31	2.94	28.08	28.08	3.27	25.78	25.78	3.65	23.44	23.44	4.08
	62 (16.6)	36.10	31.44	2.41	33.65	29.92	2.67	31.16	28.38	2.95	28.62	26.75	3.27	26.05	25.03	3.65	23.48	23.48	4.08
	63* (17.2)	36.53	25.60	2.42	34.01	24.25	2.67	31.48	22.90	2.95	28.86	21.49	3.28	26.20	20.05	3.65	23.49	18.58	4.08
	67 (19.4)	39.44	26.70	2.43	36.74	25.34	2.69	34.00	23.95	2.97	31.20	22.53	3.30	28.34	21.07	3.67	25.45	19.58	4.09
	72 (22.2)	43.05	21.95	2.46	40.11	20.71	2.72	37.12	19.45	3.00	34.07	18.16	3.32	30.95	16.85	3.69	27.81	15.51	4.11
1150	57 (13.8)	36.19	36.19	2.46	33.98	33.98	2.71	31.67	31.67	3.00	29.30	29.30	3.32	26.84	26.84	3.70	24.34	24.34	4.12
	62 (16.6)	37.15	33.84	2.46	34.60	32.19	2.72	32.03	30.46	3.00	29.42	29.41	3.32	26.90	26.90	3.70	24.38	24.38	4.12
	63* (17.2)	37.52	27.28	2.47	34.89	25.86	2.72	32.23	24.43	3.01	29.50	22.95	3.33	26.72	21.43	3.70	23.92	19.88	4.12
	67 (19.4)	40.47	28.51	2.48	37.67	27.07	2.74	34.80	25.60	3.03	31.88	24.11	3.35	28.91	22.56	3.72	25.90	20.99	4.14
	72 (22.2)	44.12	23.06	2.51	41.04	21.76	2.77	37.93	20.44	3.06	34.77	19.10	3.38	31.54	17.73	3.74	28.28	16.32	4.16
1300	57 (13.8)	37.56	37.56	2.51	35.24	35.24	2.77	32.79	32.79	3.05	30.30	30.30	3.38	27.71	27.71	3.75	25.08	25.08	4.17
	62 (16.6)	38.06	35.99	2.51	35.47	34.14	2.77	32.84	32.84	3.05	30.34	30.34	3.38	27.75	27.75	3.75	25.12	25.12	4.17
	63* (17.2)	38.23	28.87	2.51	35.57	27.41	2.77	32.80	25.90	3.05	29.99	24.35	3.38	27.14	22.76	3.75	24.25	21.11	4.17
	67 (19.4)	41.26	30.24	2.53	38.33	28.73	2.79	35.38	27.20	3.08	32.36	25.62	3.40	29.31	24.01	3.76	26.22	22.34	4.18
	72 (22.2)	44.94	24.09	2.56	41.77	22.75	2.82	38.55	21.38	3.11	35.28	19.98	3.43	31.96	18.56	3.79	28.62	17.10	4.21

See Legend and Notes on Page16.

Specifications subject to change without notice.

PERFORMANCE DATA (CONT)

42 SIZE

EVAPORATOR AIR		CONDENSER ENTERING AIR TEMPERATURES °F (°C)																	
		75 (23.9)			85 (29.4)			95 (35)			105 (40.6)			115 (46.1)			125 (51.7)		
CFM	EWB F (°C)	Capacity MBtuh		Total Sys KW	Capacity MBtuh		Total Sys KW	Capacity MBtuh		Total Sys KW	Capacity MBtuh		Total Sys KW	Capacity MBtuh		Total Sys KW	Capacity MBtuh		Total Sys KW
		Total	Sens		Total	Sens		Total	Sens		Total	Sens		Total	Sens		Total	Sens	
1175	57 (13.8)	38.66	38.66	2.51	36.66	36.66	2.87	34.60	34.60	3.30	32.45	32.45	3.80	30.07	30.07	4.39	27.19	27.19	5.02
	62 (16.6)	40.29	35.16	2.54	37.87	33.90	2.90	35.39	32.59	3.32	32.82	31.18	3.82	30.12	30.12	4.39	27.24	27.24	5.03
	63* (17.2)	41.08	28.70	2.54	38.62	27.55	2.92	36.06	26.34	3.34	33.40	25.10	3.84	30.40	23.73	4.40	26.65	22.06	4.98
	67 (19.4)	44.34	29.79	2.59	41.80	28.66	2.97	39.16	27.52	3.42	36.41	26.33	3.95	33.45	25.06	4.57	29.97	23.59	5.21
	72 (22.2)	48.52	24.17	2.66	45.92	23.18	3.05	43.20	22.16	3.52	40.37	21.10	4.06	37.44	20.00	4.70	34.27	18.84	5.44
1350	57 (13.8)	40.50	40.50	2.58	38.39	38.39	2.95	36.24	36.24	3.40	34.01	34.01	3.92	31.54	31.54	4.51	28.67	28.67	5.17
	62 (16.6)	41.38	37.85	2.59	38.93	36.52	2.96	36.44	36.11	3.41	34.06	34.06	3.92	31.59	31.59	4.52	28.72	28.72	5.17
	63* (17.2)	42.06	30.61	2.60	39.52	29.42	2.97	36.90	28.24	3.41	34.16	26.96	3.92	31.10	25.56	4.49	27.35	23.86	5.08
	67 (19.4)	45.33	31.78	2.64	42.72	30.67	3.03	40.00	29.50	3.48	37.18	28.29	4.01	34.18	27.02	4.64	30.76	25.56	5.32
	72 (22.2)	49.45	25.33	2.72	46.79	24.36	3.12	44.00	23.33	3.58	41.11	22.27	4.13	38.09	21.17	4.78	34.91	20.01	5.52
1525	57 (13.8)	41.99	41.99	2.63	39.82	39.82	3.02	37.59	37.59	3.47	35.28	35.28	4.01	32.78	32.78	4.63	29.92	29.92	5.31
	62 (16.6)	42.32	40.26	2.64	39.90	39.90	3.02	37.64	37.64	3.47	35.33	35.33	4.01	32.82	32.82	4.64	29.97	29.97	5.31
	63* (17.2)	42.81	32.42	2.65	40.22	31.23	3.02	37.53	30.01	3.47	34.76	28.74	3.99	31.66	27.29	4.56	27.97	25.57	5.17
	67 (19.4)	46.08	33.66	2.70	43.40	32.57	3.08	40.64	31.35	3.54	37.75	30.14	4.07	34.73	28.86	4.70	31.38	27.42	5.42
	72 (22.2)	50.14	26.41	2.78	47.44	25.44	3.18	44.60	24.44	3.64	41.64	23.37	4.20	38.57	22.27	4.85	35.35	21.11	5.59

See Legend and Notes on Page16.

Specifications subject to change without notice.

PERFORMANCE DATA (CONT)

48 SIZE

EVAPORATOR AIR		CONDENSER ENTERING AIR TEMPERATURES °F (°C)																	
		75 (23.9)			85 (29.4)			95 (35)			105 (40.6)			115 (46.1)			125 (51.7)		
CFM	EWB F (°C)	Capacity MBtuh Total	Capacity MBtuh Sens	Total Sys KW	Capacity MBtuh Total	Capacity MBtuh Sens	Total Sys KW	Capacity MBtuh Total	Capacity MBtuh Sens	Total Sys KW	Capacity MBtuh Total	Capacity MBtuh Sens	Total Sys KW	Capacity MBtuh Total	Capacity MBtuh Sens	Total Sys KW	Capacity MBtuh Total	Capacity MBtuh Sens	Total Sys KW
1400	57 (13.8)	45.45	45.45	3.10	42.83	42.83	3.46	40.16	40.16	3.89	37.26	37.26	4.36	33.52	33.52	4.82	29.80	29.80	5.37
	62 (16.6)	47.27	42.17	3.13	44.15	40.29	3.49	41.03	38.39	3.91	37.61	36.29	4.36	33.57	33.57	4.83	29.84	29.84	5.37
	63* (17.2)	48.20	34.32	3.13	45.02	32.66	3.50	41.76	30.98	3.92	38.24	29.20	4.38	33.54	26.93	4.82	28.81	24.65	5.33
	67 (19.4)	52.06	35.63	3.15	48.74	34.02	3.52	45.33	32.35	3.95	41.77	30.64	4.44	37.35	28.63	4.96	32.39	26.38	5.46
	72 (22.2)	56.98	28.79	3.18	53.50	27.36	3.56	49.89	25.89	3.99	46.16	24.36	4.48	42.23	22.80	5.04	37.37	21.00	5.64
1550	57 (13.8)	47.02	47.02	3.17	44.27	44.27	3.54	41.50	41.50	3.96	38.53	38.53	4.44	34.79	34.79	4.92	30.91	30.91	5.46
	62 (16.6)	48.16	44.46	3.17	45.01	42.51	3.55	41.85	40.45	3.97	38.60	38.60	4.44	34.83	34.83	4.92	30.95	30.95	5.46
	63* (17.2)	49.02	35.96	3.18	45.75	34.27	3.55	42.41	32.55	3.98	38.87	30.75	4.45	34.15	28.45	4.89	29.32	26.09	5.40
	67 (19.4)	52.88	37.35	3.20	49.49	35.71	3.57	46.00	34.00	4.00	42.38	32.25	4.49	38.03	30.31	5.04	32.93	27.95	5.53
	72 (22.2)	57.73	29.76	3.23	54.20	28.31	3.61	50.51	26.84	4.04	46.68	25.28	4.53	42.70	23.71	5.09	37.92	21.96	5.70
1800	57 (13.8)	49.14	49.14	3.25	46.25	46.25	3.63	43.34	43.34	4.06	40.29	40.29	4.55	36.55	36.55	5.07	32.46	32.46	5.60
	62 (16.6)	49.49	47.88	3.25	46.34	46.34	3.63	43.39	43.39	4.06	40.34	40.34	4.55	36.60	36.60	5.07	32.49	32.49	5.61
	63* (17.2)	50.04	38.56	3.25	46.70	36.84	3.63	43.27	35.06	4.06	39.66	33.20	4.54	34.96	30.85	5.00	30.05	28.30	5.51
	67 (19.4)	53.94	40.13	3.28	50.43	38.42	3.65	46.85	36.63	4.08	43.16	34.80	4.57	38.95	32.92	5.12	33.66	30.41	5.65
	72 (22.2)	58.67	31.28	3.31	55.06	29.83	3.69	51.26	28.32	4.12	47.34	26.73	4.62	43.27	25.12	5.18	38.61	23.50	5.78

See Legend and Notes on Page16.

Specifications subject to change without notice.

PERFORMANCE DATA (CONT)

60 SIZE

EVAPORATOR AIR		CONDENSER ENTERING AIR TEMPERATURES °F (°C)																	
		75 (23.9)			85 (29.4)			95 (35)			105 (40.6)			115 (46.1)			125 (51.7)		
CFM	EWB °F (°C)	Capacity MBtuh		Total Sys KW	Capacity MBtuh		Total Sys KW	Capacity MBtuh		Total Sys KW	Capacity MBtuh		Total Sys KW	Capacity MBtuh		Total Sys KW	Capacity MBtuh		Total Sys KW
		Total	Sens		Total	Sens		Total	Sens		Total	Sens		Total	Sens		Total	Sens	
1750	57 (13.8)	57.04	57.04	3.68	53.71	53.71	4.20	50.37	50.37	4.81	46.94	46.94	5.51	42.94	42.94	6.27	38.22	38.22	7.08
	62 (16.6)	58.59	49.98	3.70	54.72	48.26	4.22	50.83	46.41	4.82	47.02	47.02	5.51	43.00	43.00	6.28	38.29	38.29	7.08
	63* (17.2)	59.69	40.44	3.70	55.67	38.90	4.23	51.62	37.32	4.83	47.50	35.70	5.52	42.48	33.69	6.25	36.58	31.27	7.00
	67 (19.4)	64.43	42.04	3.73	60.26	40.56	4.26	56.00	39.00	4.87	51.67	37.39	5.57	47.05	35.71	6.38	41.05	33.47	7.21
	72 (22.2)	70.39	33.58	3.78	66.06	32.25	4.31	61.55	30.87	4.93	56.94	29.39	5.64	52.21	27.88	6.45	47.19	26.29	7.37
2000	57 (13.8)	59.44	59.44	3.78	55.93	55.93	4.31	52.41	52.41	4.92	48.83	48.83	5.62	44.92	44.92	6.44	39.97	39.97	7.26
	62 (16.6)	60.04	53.50	3.78	56.07	56.07	4.31	52.48	52.48	4.92	48.90	48.90	5.62	44.98	44.98	6.44	40.04	40.04	7.26
	63* (17.2)	60.84	43.04	3.78	56.74	41.49	4.31	52.56	39.87	4.92	48.32	38.18	5.62	43.48	36.25	6.39	37.36	33.66	7.13
	67 (19.4)	65.61	44.79	3.81	61.36	43.29	4.34	56.95	41.68	4.96	52.51	40.02	5.66	47.83	38.30	6.47	41.86	36.09	7.35
	72 (22.2)	71.45	35.11	3.87	67.02	33.78	4.40	62.40	32.37	5.02	57.67	30.89	5.73	52.81	29.36	6.55	47.75	27.77	7.47
2250	57 (13.8)	61.37	61.37	3.86	57.76	57.76	4.39	54.09	54.09	5.01	50.36	50.36	5.72	46.38	46.38	6.54	41.44	41.44	7.43
	62 (16.6)	61.42	61.42	3.86	57.83	57.83	4.40	54.15	54.15	5.01	50.42	50.42	5.72	46.44	46.44	6.54	41.51	41.51	7.43
	63* (17.2)	61.75	45.60	3.86	57.57	43.99	4.39	53.29	42.29	5.00	48.99	40.55	5.71	44.27	38.64	6.52	38.08	35.80	7.26
	67 (19.4)	66.46	47.42	3.89	62.10	45.93	4.43	57.67	44.25	5.04	53.13	42.53	5.75	48.44	40.74	6.56	42.58	38.56	7.48
	72 (22.2)	72.23	36.56	3.95	67.73	35.23	4.48	63.02	33.84	5.11	58.17	32.33	5.82	53.23	30.78	6.65	48.12	29.19	7.57

See Legend and Notes on Page16.

Specifications subject to change without notice.

PERFORMANCE DATA (CONT)

* At 75°F (24°C) entering dry bulb−Tennessee Valley Authority (TVA) rating conditions; all others at 80°F (27°C) dry bulb.

LEGEND
BF— Bypass Factor
edb— Entering Dry−Bulb
Ewb— Entering Wet−Bulb
kW — Total Unit Power Input
SHC— Sensible Heat Capacity (1000 Btuh)
TC — Total Capacity (1000 Btuh) (net)
rh—Relative Humidity

COOLING NOTES:
1. Ratings are net; they account for the effects of the evaporator−fan motor power and heat.
2. Direct interpolation is permissible. Do not extrapolate.
3. The following formulas may be used:

$$t_{ldb} = t_{edb} - \frac{\text{Sensible capacity (Btuh)}}{1.10 \times \text{cfm}}$$

16

t_{lwb} = Wet−bulb temperature corresponding to enthalpy air leaving evaporator coil (h_{lwb})

$$h_{lwb} = h_{ewb} - \frac{\text{total capacity (Btuh)}}{4.5 \times \text{cfm}}$$

Where: h_{ewb} = Enthalpy of air entering evaporator coil

4. The SHC is based on 805 F (26.6°C) edb temperature of air entering evaporator coil. Below 80°F (26.6°C) edb, subtract (corr factor x cfm) from SHC.
Above 80° F (26.6°C) edb, add (corr factor x cfm) to SHC.
Correction Factor = 1.10 x (1 + BF) x (edb − 80).
5. Integrated capacity is maximum (instantaneous) capacity less the effect of frost on the outdoor coil and the heat required to defrost it.

Multiplication Factors

HEATER kW RATING	VOLTAGE DISTRIBUTION V/3/60	MULTIPLICATION FACTOR
240	200	0.69
	208	0.75
	230	0.92
	240	1.00

Specifications subject to change without notice.

Dry Coil Air Delivery* − Horizontal and Downflow Discharge Sizes 24−60 208/230VAC

Unit Size	Motor Speed	Wire Color		External Static Pressure (IN. W.C.)									
				0.1	0.2	0.3	0.4	0.5	0.6	0.7	0.8	0.9	1
24	Low[1]	Blue	CFM	669	580	525	423	303	−−−	−−−	−−−	−−−	−−−
			BHP	0.09	0.10	0.11	0.11	0.12	−−−	−−−	−−−	−−−	−−−
	Med−Low[2]	Pink	CFM	829	752	680	602	549	455	313	−−−	−−−	−−−
			BHP	0.14	0.15	0.15	0.16	0.17	0.17	0.18	−−−	−−−	−−−
	Medium[3]	Red	CFM	1014	929	884	818	746	683	600	537	405	305
			BHP	0.24	0.24	0.24	0.25	0.26	0.26	0.27	0.27	0.27	0.29
	Med−High	Orange	CFM	1041	972	916	850	782	713	631	581	465	340
			BHP	0.25	0.26	0.26	0.26	0.26	0.27	0.28	0.29	0.30	0.31
	High	Black	CFM	1187	1124	1061	996	930	896	840	776	698	610
			BHP	0.36	0.36	0.37	0.37	0.38	0.38	0.39	0.39	0.39	0.40
30	Low[1]	Blue	CFM	669	580	525	423	303	−−−	−−−	−−−	−−−	−−−
			BHP	0.09	0.10	0.11	0.11	0.12	−−−	−−−	−−−	−−−	−−−
	Med−Low[3]	Pink	CFM	829	752	680	602	549	455	313	−−−	−−−	−−−
			BHP	0.14	0.15	0.15	0.16	0.17	0.17	0.18	−−−	−−−	−−−
	Medium[2]	Red	CFM	1014	929	884	818	746	683	600	537	405	305
			BHP	0.24	0.24	0.24	0.25	0.26	0.26	0.27	0.27	0.27	0.29
	Med−High	Orange	CFM	1041	972	916	850	782	713	631	581	465	340
			BHP	0.25	0.26	0.26	0.26	0.26	0.27	0.28	0.29	0.30	0.31
	High	Black	CFM	1187	1124	1061	996	930	896	840	776	698	610
			BHP	0.36	0.36	0.37	0.37	0.38	0.38	0.39	0.39	0.39	0.40
36	Low[3]	Blue	CFM	1056	982	911	882	812	740	667	564	486	361
			BHP	0.24	0.24	0.24	0.26	0.26	0.27	0.28	0.29	0.30	0.30
	Med−Low[1]	Pink	CFM	1174	1107	1045	985	914	890	825	760	673	572
			BHP	0.32	0.32	0.33	0.33	0.34	0.35	0.36	0.37	0.37	0.37
	Medium[2]	Red	CFM	1246	1195	1148	1081	1019	953	884	859	795	690
			BHP	0.38	0.39	0.39	0.40	0.40	0.41	0.42	0.42	0.42	0.43
	Med−High	Orange	CFM	1361	1299	1229	1210	1152	1092	1025	958	889	822
			BHP	0.48	0.49	0.49	0.50	0.50	0.51	0.51	0.51	0.51	0.52
	High	Black	CFM	1596	1542	1482	1424	1362	1304	1238	1173	1201	1143
			BHP	0.74	0.74	0.74	0.75	0.75	0.75	0.76	0.76	0.77	0.77
42	Low[3]	Blue	CFM	1001	902	833	777	717	650	575	527	466	419
			BHP	0.13	0.13	0.14	0.14	0.15	0.16	0.17	0.18	0.19	0.20
	Med−Low[1]	Pink	CFM	1016	950	902	842	783	721	655	590	541	480
			BHP	0.13	0.14	0.15	0.16	0.17	0.18	0.19	0.20	0.21	0.22
	Medium[2]	Red	CFM	1403	1358	1316	1265	1217	1167	1116	1067	1012	956
			BHP	0.29	0.30	0.31	0.33	0.34	0.35	0.36	0.37	0.38	0.39
	Med−High	Orange	CFM	1461	1411	1367	1327	1275	1220	1174	1127	1074	1022
			BHP	0.32	0.33	0.35	0.36	0.37	0.38	0.39	0.40	0.41	0.42
	High	Black	CFM	1575	1528	1488	1447	1406	1360	1314	1264	1213	1159
			BHP	0.40	0.42	0.43	0.44	0.45	0.46	0.47	0.48	0.49	0.50

Specifications subject to change without notice.

Dry Coil Air Delivery* − Horizontal and Downflow Discharge Sizes 24−60 208/230VAC

Unit Size	Motor Speed	Wire Color		External Static Pressure (IN. W.C.)									
				0.1	0.2	0.3	0.4	0.5	0.6	0.7	0.8	0.9	1
48	Low[1]	Blue	CFM	1378	1344	1295	1260	1216	1179	1135	1087	1035	995
			BHP	0.26	0.27	0.29	0.31	0.31	0.33	0.34	0.36	0.36	0.38
	Med−Low[2]	Pink	CFM	1696	1671	1631	1607	1574	1539	1507	1463	1432	1393
			BHP	0.45	0.47	0.49	0.50	0.52	0.52	0.54	0.55	0.57	0.58
	Medium[3]	Red	CFM	1994	1968	1943	1910	1882	1835	1774	1702	1614	1512
			BHP	0.72	0.73	0.75	0.76	0.78	0.78	0.76	0.73	0.70	0.66
	Med−High	Orange	CFM	2054	2013	1986	1964	1919	1854	1779	1695	1605	1498
			BHP	0.77	0.79	0.80	0.82	0.81	0.80	0.76	0.74	0.69	0.65
	High	Black	CFM	2267	2201	2133	2071	1997	1923	1835	1739	1654	1551
			BHP	1.03	1.00	0.97	0.93	0.89	0.86	0.82	0.78	0.74	0.69
60	Low[3]	Blue	CFM	1330	1277	1232	1191	1147	1103	1060	1004	963	919
			BHP	0.26	0.27	0.29	0.30	0.31	0.32	0.33	0.34	0.36	0.37
	Med−Low[1]	Pink	CFM	1475	1436	1399	1351	1317	1270	1236	1188	1152	1105
			BHP	0.35	0.36	0.37	0.38	0.40	0.41	0.42	0.43	0.45	0.45
	Medium[2]	Red	CFM	1736	1710	1668	1630	1600	1557	1522	1479	1450	1406
			BHP	0.53	0.54	0.55	0.58	0.59	0.60	0.62	0.63	0.64	0.65
	Med−High	Orange	CFM	1935	1909	1867	1836	1808	1766	1696	1619	1535	1454
			BHP	0.71	0.73	0.74	0.76	0.78	0.79	0.77	0.75	0.72	0.68
	High	Black	CFM	2205	2150	2078	2011	1941	1852	1779	1672	1572	1473
			BHP	1.04	1.02	0.99	0.95	0.92	0.87	0.85	0.79	0.75	0.70

*Air delivery values are without air filter and are for dry coil (See Wet Coil Pressure Drop table).
[1] Factory-shipped heating speed
[2] Factory-shipped cooling speed
[3] Factory-shipped continuous fan speed
"NA" = Not allowed for heating speed
NOTE: Deduct field-supplied air filter pressure drop and wet coil pressure drop to obtain external static pressure available for ducting.

Shaded areas indicate speed/static combinations that are not permitted for dehumidification speed.

PERFORMANCE DATA

Wet Coil Pressure Drop (IN. W.C.)

UNIT SIZE	STANDARD CFM (SCFM)																
	600	700	800	900	1000	1100	1200	1300	1400	1500	1600	1700	1800	1900	2000	2100	2200
24	0.03	0.04	0.04	0.05	0.06												
30				0.05	0.06	0.07	0.08	0.11									
36				0.06	0.06	0.09	0.10	0.11	0.14								
42					0.05	0.05	0.06	0.07	0.08	0.08	0.09	0.09	0.11				
48							0.04	0.06	0.09	0.10	0.10	0.11	0.12	0.13	0.14		
60										0.06	0.07	0.01	0.08	0.09	0.10	0.12	0.13

Economizer with 1−in. Filter Pressure Drop (IN. W.C.)

FILTER SIZE IN. (MM)	COOLING TONS	STANDARD CFM (SCFM)																
		600	700	800	900	1000	1100	1200	1300	1400	1500	1600	1700	1800	1900	2000	2100	2200
600−1400CFM 12x20x1+12x20x1 (305x508x25+305x508x25)	2.0, 2.5, 3.0	–	–	0.09	0.14	0.16	0.18	0.25	0.28	0.3	–	–	–	–	–	–	–	–
1200−1800 CFM 16x24x1+14x24x1 (406x610x25+356x610x25)	3.5, 4.0	–	–	–	–	–	–	0.10	0.11	0.12	0.13	0.14	0.16	0.16	–	–	–	–
1500−2200 CFM 16x24x1+18x24x1 (406x610x25+457x610x25)	5.0	–	–	–	–	–	–	–	–	–	0.15	0.17	0.18	0.20	0.21	0.22	0.23	0.23

Horizontal and Downflow Filter Pressure Drop Table (IN. W.C.)

FILTER SIZE IN. (MM)	COOLING TONS	STANDARD CFM (SCFM)																
		600	700	800	900	1000	1100	1200	1300	1400	1500	1600	1700	1800	1900	2000	2100	2200
600−1400CFM 12x20x1+12x20x1 (305x508x25+305x508x25	2.0, 2.5, 3.0	0.03	0.05	0.06	0.08	0.10	0.11	0.13	0.14	0.16	–	–	–	–	–	–	–	–
1200−1800 CFM 16x24x1+14x24x1 (406x610x25+356x610x25)	3.5, 4.0	–	–	–	–	–	–	0.07	0.08	0.09	0.09	0.10	0.11	0.12	–	–	–	–
1500−2200 CFM 16x24x1+18x24x1 (406x610x25+457x610x25)	5.0	–	–	–	–	–	–	–	–	–	0.04	0.06	0.08	0.10	0.11	0.13	0.14	0.15

Electric Heat Pressure Drop Tables (IN. W.C.)
Small Cabinet: 24−36

STATIC	STANDARD CFM (SCFM)											
	500	600	700	800	900	1000	1100	1200	1300	1400	1500	1600
5 kW	0.00	0.00	0.00	0.00	0.00	0.00	0.00	0.00	0.02	0.04	0.06	0.07
10 kW	0.00	0.00	0.00	0.00	0.00	0.02	0.04	0.06	0.07	0.09	0.10	0.11
15 kW	0.00	0.00	0.00	0.02	0.04	0.06	0.08	0.10	0.12	0.14	0.16	0.18
20 kW	0.00	0.00	0.02	0.04	0.06	0.08	0.09	0.11	0.13	0.15	0.17	0.19

Large Cabinet: 42−60

STATIC	STANDARD CFM (SCFM)														
	1100	1200	1300	1400	1500	1600	1700	1800	1900	2000	2100	2200	2300	2400	2500
5 kW	0.00	0.00	0.00	0.01	0.02	0.03	0.04	0.05	0.06	0.07	0.08	0.09	0.10	0.11	0.12
10 kW	0.00	0.00	0.01	0.02	0.03	0.04	0.05	0.06	0.07	0.08	0.09	0.10	0.11	0.12	0.13
15 kW	0.00	0.02	0.03	0.04	0.05	0.06	0.07	0.08	0.09	0.10	0.11	0.12	0.13	0.14	0.15
20 kW	0.02	0.03	0.04	0.05	0.06	0.07	0.08	0.09	0.10	0.11	0.12	0.13	0.14	0.15	0.16

Specifications subject to change without notice.

TYPICAL PIPING AND WIRING

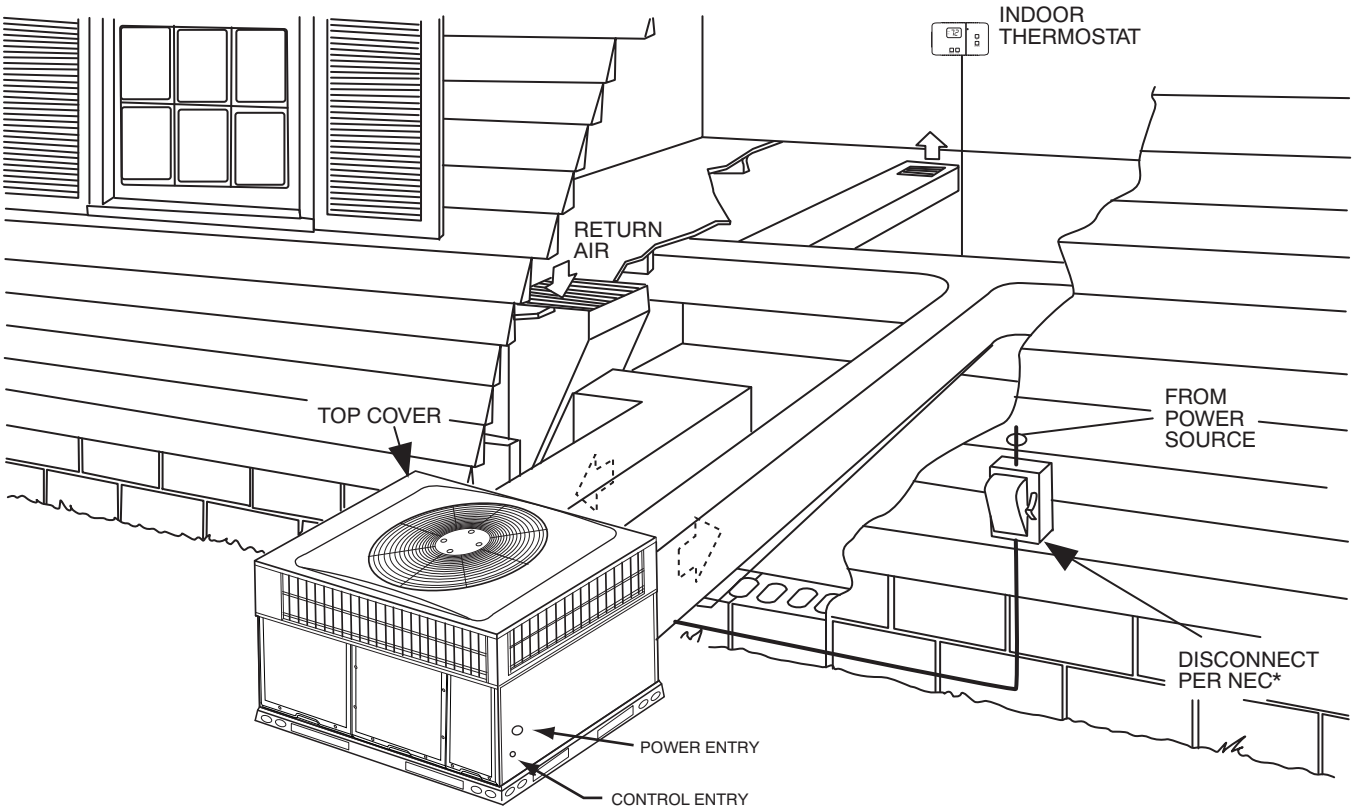

*NEC - National Electrical Code

A09240

APPLICATION DATA

Condensate trap — A 2−in. (50.8 mm) condensate trap must be field supplied.

Ductwork — Secure downflow discharge ductwork to roof curb. For horizontal discharge applications, attach ductwork to unit with flanges.

To convert a unit to downflow discharge — Units are equipped with factory−installed inserts in the downflow openings. Removal of the inserts is similar to removing an electrical knock−out.

Maximum cooling airflow — To minimize the possibility of condensate blow−off from the evaporator, airflow through the units should not exceed 450 cfm per ton.

Minimum cooling airflow — Minimum cooling airflow is 350 cfm per ton.

Minimum ambient cooling operation temperature — All standard units have a minimum ambient operating temperature of 40°F (4°C). With accessory low ambient temperature kit, units can operate at temperatures down to 0°F (−17°C).

Specifications subject to change without notice.

ELECTRICAL DATA

MODEL SIZE	NOMINAL V−PH−HZ	VOLTAGE RANGE		COMPRESSOR		OFM	IFM	NOMINAL ELECTRIC HEAT	POWER SUPPLY		
		MIN	MAX	RLA	LRA	FLA	FLA	kW	FLA	MCA	MOCP
24	208/230−1−60	197	253	8.7	46	0.6	3.8	−/−	−/−	15.2	20
								3.8/5	18.1/20.8	27.4/30.8	30/35
								5.4/7.2	25.9/30	37.1/42.3	40/45
								7.5/10	36.1/41.7	49.9/56.9	50/60
30	208/230−1−60	197	253	11.2	57	0.7	3.8	−/−	−/−	18.5	25
								3.8/5	18.1/20.8	27.4/30.8	30/35
								5.4/7.2	25.9/30	37.1/42.3	40/45
								7.5/10	36.1/41.7	49.9/56.9	50/60
								11.3/15	54.2/62.5	72.5/82.9	80/90
36	208/230−1−60	197	253	16.7	79	1	5.4	−/−	−/−	27.4	40
								3.8/5	18.1/20.8	29.4/32.8	40/40
								5.4/7.2	25.9/30	39.1/44.3	40/45
								7.5/10	36.1/41.7	51.9/58.9	60/60
								11.3/15	54.2/62.5	74.5/84.9	80/90
42	208/230−1−60	197	253	16.7	109	1	3.8	−/−	−/−	25.8	40
								3.8/5	18.1/20.8	27.4/30.8	40/40
								5.4/7.2	25.9/30	37.1/42.3	40/45
								7.5/10	36.1/41.7	49.9/56.9	50/60
								11.3/15	54.2/62.5	72.5/82.9	80/90
								15/20	72.2/83.3	95/108.9	100/110
48	208/230−1−60	197	253	19.6	130	1	7.6	−/−	−/−	33.2	50
								3.8/5	18.1/20.8	33.2/35.5	50/50
								5.4/7.2	25.9/30	41.9/47	50/50
								7.5/10	36.1/41.7	54.6/61.6	60/70
								11.3/15	54.2/62.5	77.3/87.6	80/90
								15/20	72.2/83.3	99.8/113.6	100/125
60	208/230−1−60	197	253	23.7	152.5	1	7.6	−/−	−/−	38.3	60
								3.8/5	18.1/20.8	38.3/38.3	60/60
								5.4/7.2	25.9/30	41.9/47	60/60
								7.5/10	36.1/41.7	54.6/61.6	60/70
								11.3/15	54.2/62.5	77.3/87.6	80/90
								15/20	72.2/83.3	99.8/113.6	100/125

LEGEND

FLA - Full Load Amps
IDM - Inducer Motor
IFM - Indoor Fan Motor
LRA -Locked Rotor Amps
MCA - Minimum Circuit Amps
MOCP - Maximum Over Current Protection
OFM - Outdoor Fan Motor
RLA - Rated Load Amps

NOTES:

1. In compliance with NEC (National Electrical Code) requirements for multimotor and combination load equipment (refer to NEC Articles 430 and 440), the overcurrent protective device for the unit shall be Power Supply fuse or circuit breaker.
2. Minimum wire size is based on 60 C copper wire. If other than 60 C wire is used, or if length exceeds wire length in table, determine size from NEC.
3. Unbalanced 3-Phase Supply Voltage
   Never operate a motor where a phase imbalance in supply voltage is greater than 2%. Use the following formula to determine the percentage of voltage imbalance

   % Voltage imbalance

   $$= 100 \times \frac{\text{max voltage deviation from average voltage}}{\text{average voltage}}$$

EXAMPLE: Supply voltage is 230-3-60.

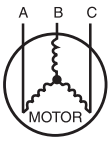

AB = 228 v
BC = 231 v
AC = 227 v

$$\text{Average Voltage} = \frac{228 + 231 + 227}{3} = \frac{686}{3} = 229$$

Determine maximum deviation from average voltage.
(AB) 229 - 228 = 1 v
(BC) 231 - 229 = 2 v
(AC) 229 - 227 = 2 v

Maximum deviation is 2 v.

Determine percent of voltage imbalance

$$\% \text{ Voltage Imbalance} = 100 \times \frac{2}{229} = 0.8\%$$

This amount of phase imbalance is satisfactory as it is below the maximum allowable 2%.

IMPORTANT: If the supply voltage phase imbalance is more than 2%, contact your local electric utility company immediately.

A06564

Specifications subject to change without notice.

CONNECTION WIRING SCHEMATIC 208/230−1−60

CONNECTION WIRING DIAGRAM
DANGER: ELECTRICAL SHOCK HAZARD DISCONNECT POWER BEFORE SERVICING

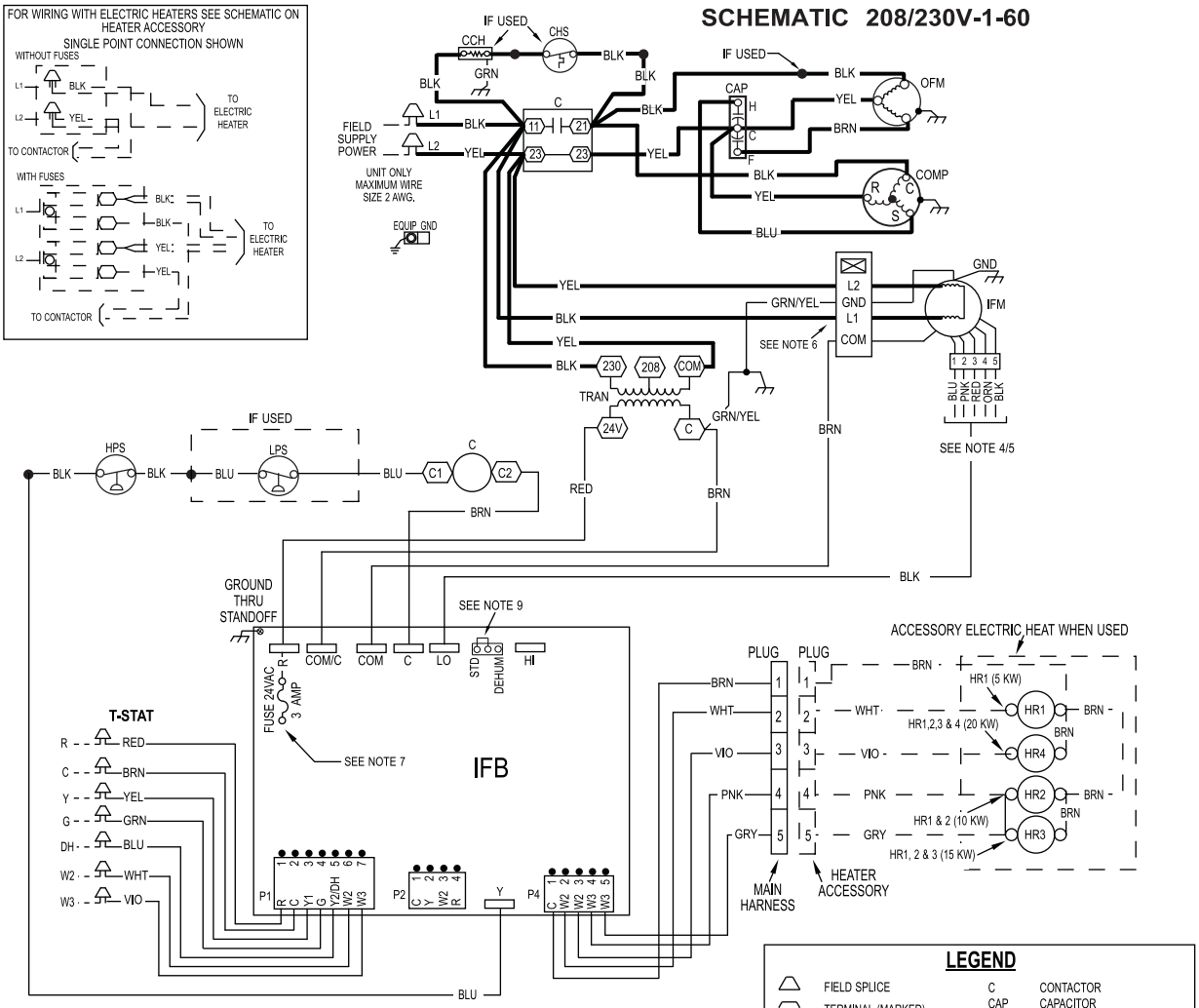

LEGEND

△	FIELD SPLICE	C	CONTACTOR
⬡	TERMINAL (MARKED)	CAP	CAPACITOR
○	TERMINAL (UNMARKED)	CCH	CRANKCASE HEATER
●	SPLICE	CHS	CRANKCASE HEATER SWITCH
⬡	SPLICE (MARKED)	COMP	COMPRESSOR MOTOR
——	FACTORY LO VOLTAGE	CTD	COMPRESSOR TIME DELAY
– –	FIELD CONTROL WIRING	DH	DEHUM
—·—	FIELD POWER WIRING	GND	GROUND
– – –	ACCESSORY OR OPTIONAL WIRING	HPS	HIGH PRESSURE SWITCH
▬	FACTORY HI VOLTAGE	HR	HEATER RELAY
		IFB	INDOOR FAN BOARD
		IFM	INDOOR FAN MOTOR
		LPS	LOW PRESSURE SWITCH
		OFM	OUTDOOR FAN MOTOR
		TRAN	TRANSFORMER
		T-STAT	THERMOSTAT

UNIT COMPONENT ARRANGEMENT

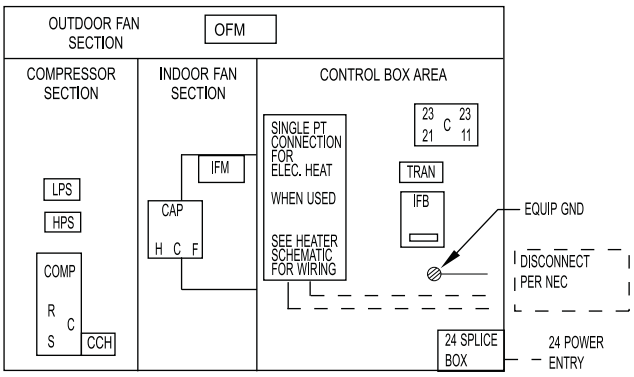

NOTES:

1. IF ANY OF THE ORIGINAL WIRES FURNISHED ARE REPLACED IT MUST BE REPLACED WITH THE SAME OR IT'S EQUIVALENT.
2. SEE PRE SALE LITERATURE FOR THERMOSTATS.
3. USE 75 DEGREES C COPPER CONDUCTORS FOR FIELD INSTALLATION.
4. REFER TO INSTALLATION INSTRUCTIONS FOR CORRECT SPEED SELECTION FOR IFM.
5. RELOCATION OF SPEED TAPS MAY BE REQUIRED WHEN USING FIELD INSTALLED ELECTRIC HEATERS. CONSULT INSTALLATION INSTRUCTIONS TO DETERMINE CORRECT SPEED TAP SETTING.
6. "DO NOT DISCONNECT PLUG UNDER LOAD".
7. THIS FUSE IS MANUFACTURED BY LITTLE FUSE, P/N 287003.
8. N.E.C. CLASS 2, 24V.
9. UNIT FACTORY - SHIPPED IN STD MODE.
10. CCH NOT USED ON ALL UNITS.

A150503

Specifications subject to change without notice.

LADDER WIRING SCHEMATIC 208/230−1−60

LADDER WIRING DIAGRAM
DANGER: ELECTRICAL SHOCK HAZARD DISCONNECT POWER BEFORE SERVICING

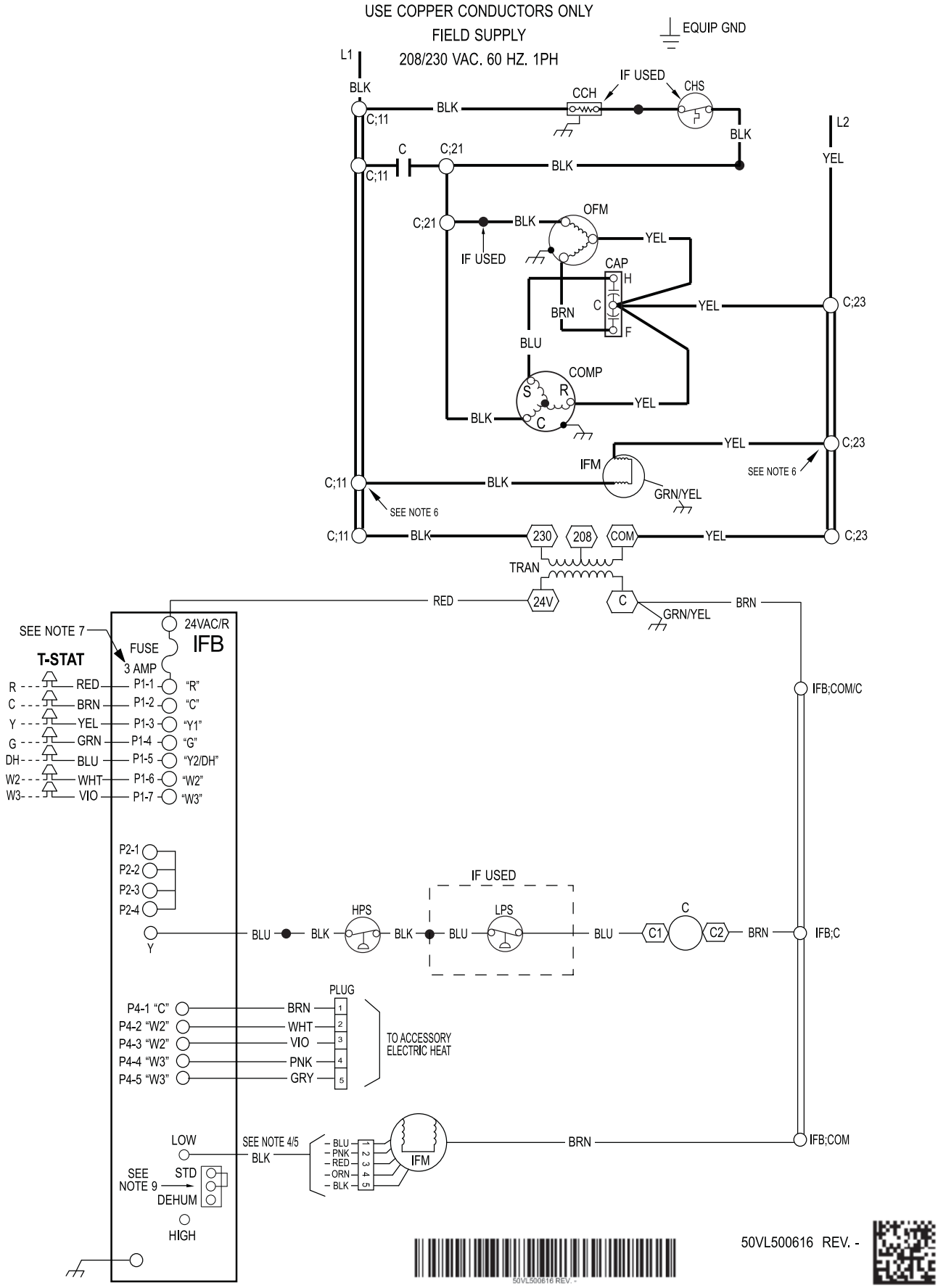

A150513

CONTROLS

Operating sequence

Cooling — When the system thermostat calls for cooling, 24 V is supplied to the “Y” and “G” terminals of the thermostat. This completes the circuit to the contactor coil (C) and indoor (evaporator) fan relay (IFR). The normally open contacts of energized C close and complete the circuit through compressor motor (COMP) to outdoor (condenser) fan motor (OFM). Both motors start instantly. The set of normally open contacts of energized IFR close and complete the circuit through IFM. The IFM starts instantly.

On the loss of the thermostat call for cooling, 24 V is removed from both the “Y” and “G” terminals (provided the fan switch is in the “AUTO” position) de−energizing the compressor contactor and opening the contacts supplying power to compressor/OFM. After a 90−second delay, the IFM shuts off. If the thermostat fan selector switch is in the “ON” position, the IFM will run continuously.

Heating — If accessory electric heaters are installed, on a call for heat, circuit R−W is made through the thermostat contacts. Circuit R−G is made which energizes the IFR. If the heaters are staged, then the thermostat closes a second set of contacts (W2) when second stage is required. When thermostat is satisfied, contacts open, deenergizing the heater relay and the IFR.

GUIDE SPECIFICATIONS

Packaged Air Conditioner System Constant Volume Application

HVAC Guide Specifications

Size Range: **2 to 5 Tons, Nominal Cooling**

SYSTEM DESCRIPTION

Outdoor rooftop mounted or ground mounted, electric cooling unit utilizing a hermetic scroll compressor for cooling duty. Unit shall discharge supply air vertically or horizontally as shown on contract drawings. Condenser fan/coil section shall have a draw−thru design with vertical discharge for minimum sound levels.

QUALITY ASSURANCE

A. Unit shall be rated in accordance with AHRI Standards 210/240 and 270−1995.

B. Unit shall be designed in accordance with UL Standard 1995.

C. Unit shall be manufactured in a facility registered to ISO 9001 manufacturing quality standard.

D. Unit shall be UL listed and c−UL certified as a total package for safety requirements.

E. Roof curb shall be designed to conform to NRCA Standards.

F. Insulation and adhesives shall meet NFPA 90A requirements for flame spread and smoke generation.

G. Cabinet insulation shall meet ASHRAE Standard 62P.

DELIVERY, STORAGE AND HANDLING

Unit shall be stored and handled per manufacturer’s recommendations.

Part 2 — Products

EQUIPMENT

A. General:

Factory−assembled, single−piece, heating and cooling unit. Contained within the enclosure shall be all factory wiring, piping, controls, refrigerant charge with R−410A refrigerant, and special features required prior to field start−up.

B. Unit Cabinet:

1. Unit cabinet shall be constructed of phosphated, zinc−coated, pre−painted steel capable of with−standing 500 hours in salt spray.
2. Normal service shall be through 3 removable cabinet panels.
3. The unit shall be constructed on a rust proof unit base that has an externally trapped, integrated sloped drain.
4. Evaporator fan compartment top surface shall be insulated with a minimum 1/2−in. (12.7 mm) thick, flexible fiberglass insulation, coated on the air side and retained by adhesive and mechanical means. The evaporator wall sections will be insulated with a minimum semi−rigid foil−faced board capable of being wiped clean. Aluminum foil−faced fiberglass insulation shall be used in the entire indoor air cavity section.
5. Unit shall have a field−supplied condensate trap.

C. Fans:

1. The evaporator fan shall be an ECM Motor.
2. Fan wheel shall be made from steel, be double−inlet type with forward curved blades with corrosion resistant finish. Fan wheel shall be dynamically balanced.
3. Condenser fan shall be direct drive propeller type with aluminum blades riveted to corrosion resistant steel spiders, be dynamically balanced, and discharge air vertically.

D. Compressor:

1. Fully hermetic compressors with factory−installed vibration isolation.

E. Coils:

Evaporator and condenser coils shall have aluminum plate fins mechanically bonded to seamless copper tubes with all joints brazed. Tube sheet openings shall be belled to prevent tube wear.

F. Refrigerant Components:

Refrigerant expansion device shall be of the TXV (thermostatic expansion valve) or fixed orifice type.

G. Filters:

Filter section shall consist of field−installed, throwaway, 1−in. (25 mm) thick fiberglass filters of commercially available sizes.

H. Controls and Safeties:

1. Unit controls shall be complete with a self−contained low voltage control circuit.
2. Compressors shall incorporate a solid−state compressor protector that provides reset capability.

I. Operating Characteristics:

1. Unit shall be capable of starting and running at 125°F (51°C) ambient outdoor temperature per maximum load criteria of AHRI Standard 210.
2. Compressor with standard controls shall be capable of operation down to 40°F (4°C) ambient outdoor temperature.
3. Units shall be provided with fan time delay to prevent cold air delivery before the heat exchanger warms up.
4. Unit shall be provided with 60−second fan time delay after the thermostat is satisfied.

J. Electrical Requirements:

All unit power wiring shall enter the unit cabinet at a single location.

K. Motors:

1. Compressor motors shall be of the refrigerant−cooled type with line−break thermal and current overload protection.
2. All fan motors shall have permanently lubricated bearings, and inherent, automatic reset, thermal overload protection.

GUIDE SPECIFICATIONS (CONT)

L. Special Features:

1. Compressor Start Kit (single phase units only):
   Shall provide additional starting torque for single−phase compressors.
2. Thermostat:
   To provide for one−stage heating and cooling in addition manual or automatic changeover and indoor fan control.
3. Crankcase Heater:
   Shall provide anti−floodback protection for low−load cooling applications.
4. Economizer:
   (Horizontal − Field installed accessory)
   (Vertical − Field installed accessory)
   a. Economizer controls capable of providing free cooling using outside air.
   b. Equipped with low leakage dampers not to exceed 3% leakage, at 1.0 IN. W.C. pressure differential.
   c. Spring return motor shuts off outdoor damper on power failure.
5. Electric Heaters:
   a. Electric heater shall be availabel as a field−installed option.
   b. Heater elements shall be open wire type, adequately supported and insulated with ceramic bushings.
   c. Electric heater packages must provide single point power connection capability.
6. Filter Rack Kit:
   Shall provide filter mounting for downflow applications. Offered as a field installed accessory.
7. Flat Roof Curb:
   Curbs shall have seal strip and a wood nailer for flashing and shall be installed per manufacturer's instructions.
8. Low Ambient Package:
   Shall consist of a solid−state control and condenser coil temperature sensor for controlling condenser−fan motor operation, which shall allow unit to operate down to 0°F (−17.7°C) outdoor ambient temperature when properly installed.
9. Manual Outdoor Air Damper:
   Package shall consist of damper, birdscreen, and rainhood which can be preset to admit outdoor air for year−round ventilation.
10. Square−To−Round Duct Transitions (24−48 size):
    Shall have the ability to convert the supply and return openings from rectangular to round.
11. Dual Point Electric Heaters
    Allows you to power the electric heater and unit contactor separately by having two individual field power supply circuits connected respectively.
12. Low Pressure Switch
    Kit is designed for use when a low pressure control is desired. This kit provides added reliability for the compressor. Offered as a field installed accessory.

Specifications subject to change without notice.

WPA4 ACCESSORIES

Accessory Model Number	Description	Use With
CURBS		
CPRFCURB011A00	Roof Curb, 14” High	24 − 60
CPRFCURB013A00	Roof Curb, 14” High	42 − 60
Note: CPRFCURB011A00 can be used with 42−60 size units with some overhang.		
ADAPTER CURBS*		
CPADCURB001A00	Adapter curb for use with NPRFCURB006A00 & NPRFCURB007A00	24 − 36
CPADCURB002A00	Adapter curb for use with NPRFCURB008A00 & NPRFCURB009A00	42 − 60
* Can also be used when replacing other manufacturer’s older generation units that contain a composite base without a metal base rail.		
CONCENTRIC ADAPTERS − (Use with curb only)		
NPCONADP001A00	For 18” round duct (use with curb CPRFCURB011A00)	Small Curb
NPCONADP002A00	For 18” round duct (use with curb CPRFCURB013A00)	Large Curb
ECONOMIZERS		
CPECOMZR007B00	Dedicated Vertical Economizer − Internal with solid state controller, gear driven, fully modulating damper, spring return actuator, up to 50% barometric relief, supply and dry bulb outdoor air sensors. Includes filter rack with 1” filters.	24 − 36
CPECOMZR008A00		42 − 48
CPECOMZR009A00		60
CPECOMZR010A00	Dedicated Horizontal Economizer − Internal with solid state controller, fully modulating damper, spring return actuator, supply and dry bulb outdoor air sensor, and low ambient compressor lockout switch included. Includes filter rack with 1−inch filters.	24 − 36
CPECOMZR011A00		42 − 48
CPECOMZR012A00		60
DAMPERS		
CPMANDPR007A00	Manual Outside Air Damper − (Includes filter rack and 1” filter, same as CPFILTRK kit)	24 − 36
CPMANDPR008A00		42, 48
CPMANDPR009A00		60
INTERNAL FILTER RACKS		
CPFILTRK007A00	Internal Filter Rack (includes 1−inch filters)	24 − 36
CPFILTRK008A00		42 − 48
CPFILTRK009A00		60
LOW AMBIENT, ANTI−CYCLE TIMER, COMPRESSOR START ASSIST		
CPLOWAMB001A00 (AXB035LAA)	Low Ambient Control − enables cooling system to operate down to 0 Deg. F by cycling condenser fan on and off.	ALL
NRTIMEGD001A00	Five Minute Compressor Delay	ALL
CPHSTART002A00	PTC Compressor Start Assist Kit	ALL
CRANKCASE HEATER − BELLY BAND TYPE		
CPCRKHTR008A00	240V Crankcase Heater	24 − 36
CPCRKHTR004A00	240V Crankcase Heater	42 − 60
CPCRKHTR004A00	60 single phase	60
HAIL GUARDS / COIL PROTECTION		
NAPA00501GR	3/8” spacing dense wire grilles	24
NAPA00701GR	3/8” spacing dense wire grilles	30
NAPA01401GR	3/8” spacing dense wire grilles	36
NAPA00601GR	3/8” spacing dense wire grilles	42
NAPA01201GR	3/8” spacing dense wire grilles	48
NAPA01301GR	3/8” spacing dense wire grilles	60
DUCT TRANSITIONS		
NPDUCFLG002A00	Square to Round (1 set of 2, use with horizontal duct flanges only)	24−48
LOW PRESSURE SWITCH		
CPLPSCTL001A00	Low Pressure Switch Kit (Standard on 24 size)	30−60

ELECTRIC HEATERS	**Voltage / Nominal Capacity kW / Fuses**			
PART NO.	**NOMINAL CAPACITY (kW)**	**FUSED**	**STAGES**	**USED WITH**
208/230V − 1 PHASE − 60 HZ				
CPHEATER052A0*	3.8 / 5.0	NO	1	ALL
CPHEATER064A0*	3.8 / 5.0	YES	1	ALL
CPHEATER069A0*	5.4 / 7.2	NO	1	ALL
CPHEATER070A0*	5.4 / 7.2	YES	1	ALL
CPHEATER065A0*	7.5 / 10.0	NO	1	24 − 42
CPHEATER050A0*	7.5 / 10.0	YES	1	ALL
CPHEATER051A0*	11.3 / 15.0	YES	2	30 − 42
CPHEATER066A0*	11.3 / 15.0	YES	2	30 − 60
CPHEATER053A0*	15.0 / 20.0	YES	2	42
CPHEATER054A0*	15.0 / 20.0	YES	2	42 − 60

* Denotes digit can be 0, 1, or 2

NOTE: If installing an accessory heater, the thermostat must have capability to energize “G” (fan) on a call for “W” (electric heat). TSTAT0406 and TSTAT0408 contain this feature.

Copyright 2016 International Comfort Products
Lewisburg, Tennessee 37091 USA

Specifications subject to change without notice.