# General Information

- FAST-STAT wiring extenders electronically add more wires to a control cable.
- Saves significant time and expense as compared to re-pulling of new cables.
- Causes no damage to walls or ceilings as compared to access holes that are often needed when re-pulling cables.
- The Sender and Receiver communicate over the existing thermostat cable and/or outdoor unit cable.
- Not a wireless system and therefore avoids all the problems that wireless systems may have.
- No batteries required. All FAST-STAT models are powered by the existing 24 volt transformer.
- Compatible with all conventional wiring systems using R, C, W, W2, Y, Y2, G, O/B and other terminals.
- Works with old and new systems. Can be connected to older systems such as thermopile millivolt, standing pilot systems, intermittent pilot controllers, fan centers etc.
- Can be used with oil burners, zone controllers and other systems that require “dry contact switching”.
- Works over long cable lengths – up to 500 ft and more.
- FAST-STAT Wiring Extenders do not produce interference with other electronic devices nor are they affected electronic devices that produce large amounts of interference.
- Many FAST-STAT Wiring Extenders can be used in the same building or complex without interference between units.
- Low power use. Most FAST-STAT models use less than 3 watts of power.

# Model 1000

## Model 1000

- It adds one wire to any system
- The Sender has three wires; Input A, Input B and a communication wire
- The Receiver has five wires; Output A, Output B, a Communication wire, Power “R” and a Common “C”
- Any combination of two functions such as W1, W2, Y1, Y2, G, O/B and others can be connected. Only transformer “R” and “C” cannot be connected to the Sender.

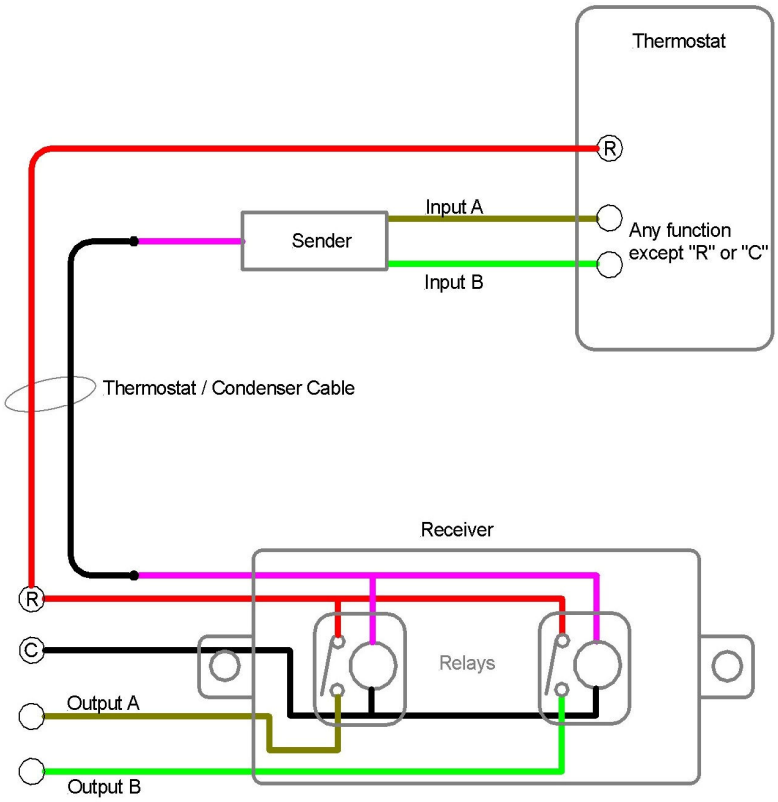

# Model 1000

## How It Works

Input A and Input B are independent of each other in that either one can be on by itself or they can both be on at the same time.

Any two functions such as W, Y, G, or O/B can share one wire between the thermostat and indoor unit or between the indoor and outdoor units.

## Application Examples

### 2-stage Air Conditioners

A 2-wire air conditioner cable can be converted to provide R, C, Y1 & Y2 using the Model 1000. There are two wiring methods that can be used.

### Wi-Fi Thermostats

If the thermostat cable has three or more wires, the Model 1000 can be used to add a common or "C" connection at the thermostat. This is achieved by having two existing functions share one wire which then frees up a wire that can then become a common wire.

Many Wi-Fi thermostats have a self-configure option in which the thermostat automatically detects the wires connected to it in order to make easier for homeowners to install the thermostat. When using the Model 1000, do a "Reset" then select "Pro Setup" to manually configure the thermostat. There are diodes in the Model 1000 sender that often prevents the thermostat from properly auto-configuring itself.

### Adding an Extra Function

The Model 1000 can be used to add W2, Y2, G, etc to a thermostat cable. For example the existing "W" wire can become W1 & W2.

### Cable Repairs

If a wire in a cable is broken (open circuit) or shorted to another wire or to ground, the Model 1000 can often be used to replace the damaged wire.

**Model 1000 used to extend wiring from a thermostat.**
**Example: Adding manual fan control to heat only system.**

DWG: 1K-A

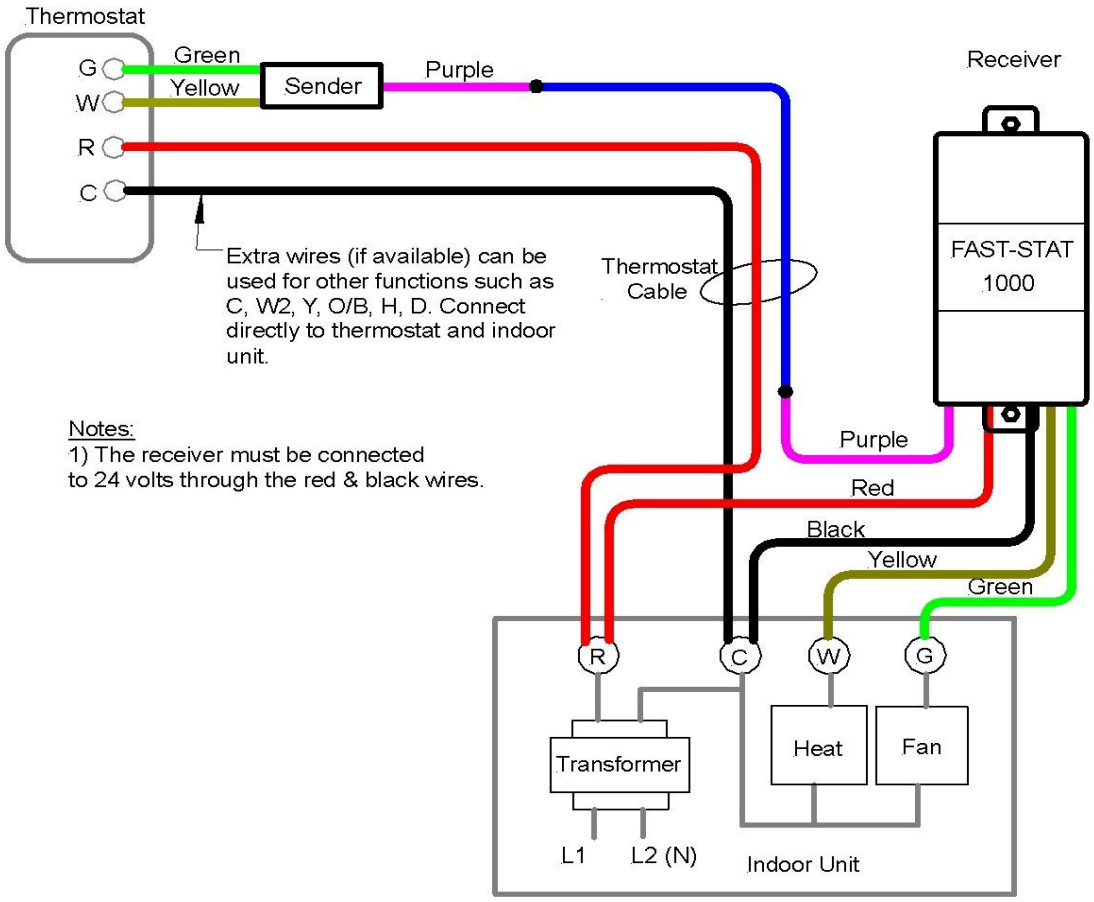

**Model 1000 used to extend wiring to an outdoot unit.**
**Example: Installing a 2-stage air conditioner.**

DWG: 1K-B

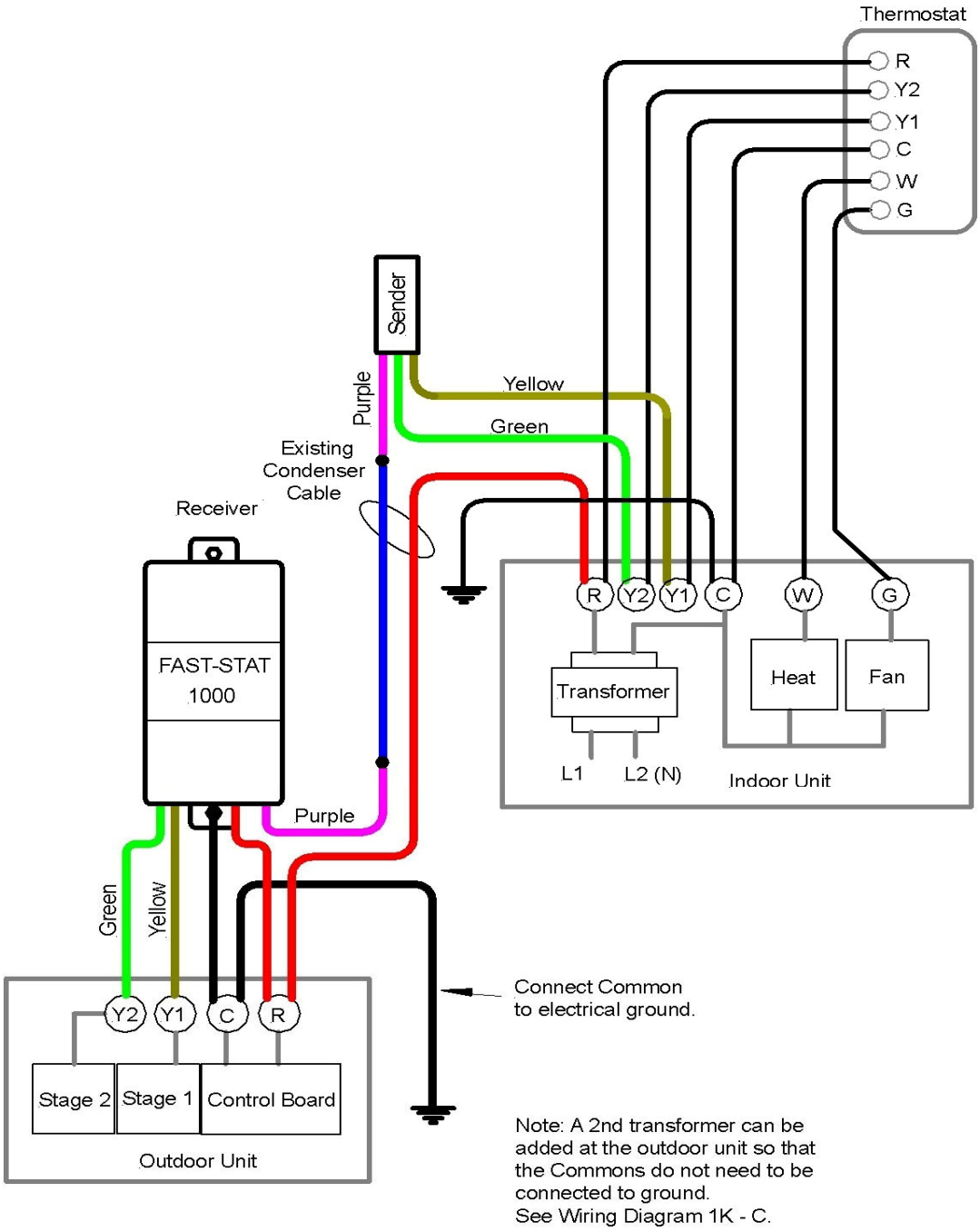

**Model 1000 used to extend wiring to an outdoot unit.**
**Example: Installing a 2-stage air conditioner - 2 transformers**

DWG: 1K-C

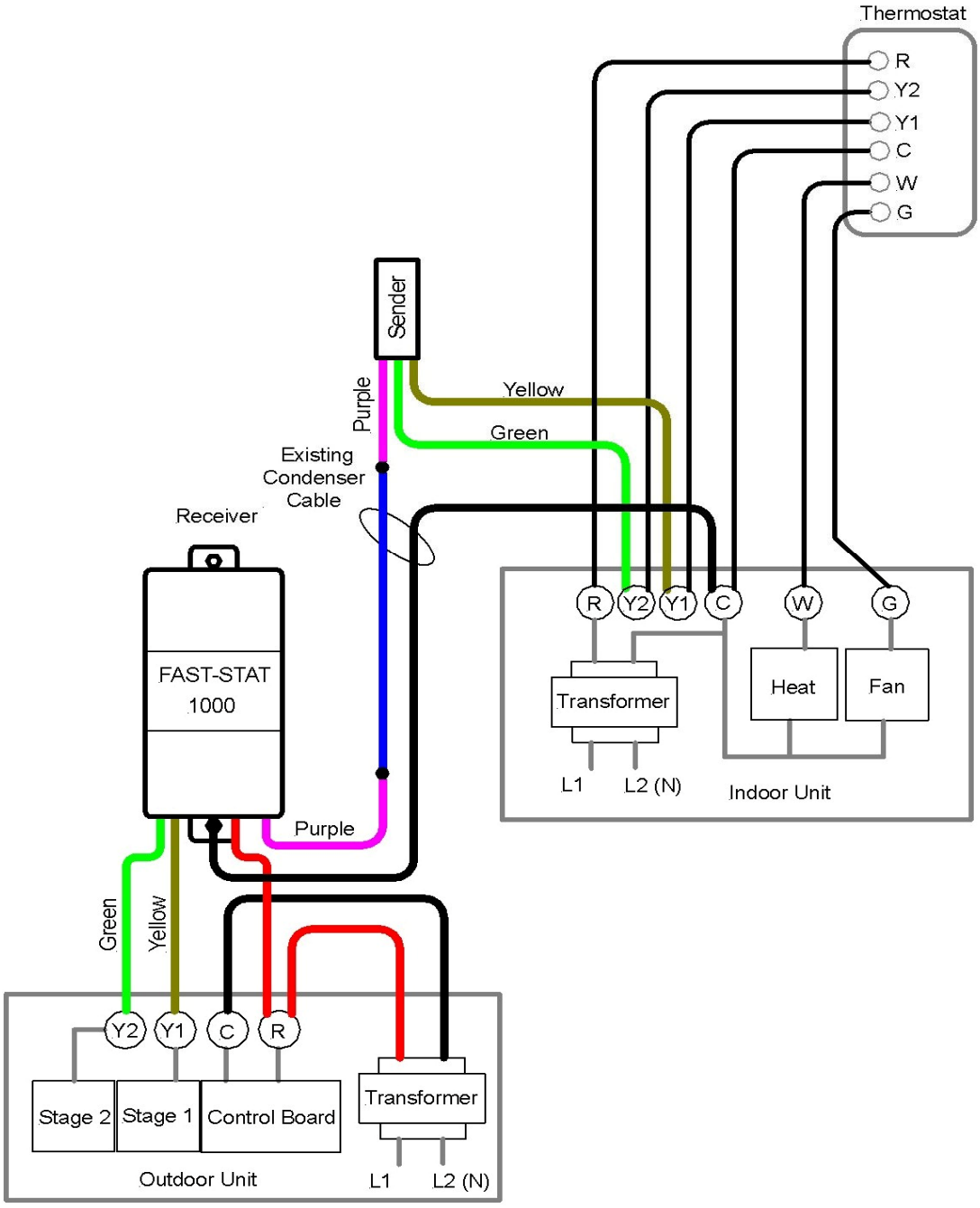

**Model 1000 used to extend wiring to an outdoot unit.**
**Example: Installing a heat pump - 2 transformers**

DWG: 1K-D

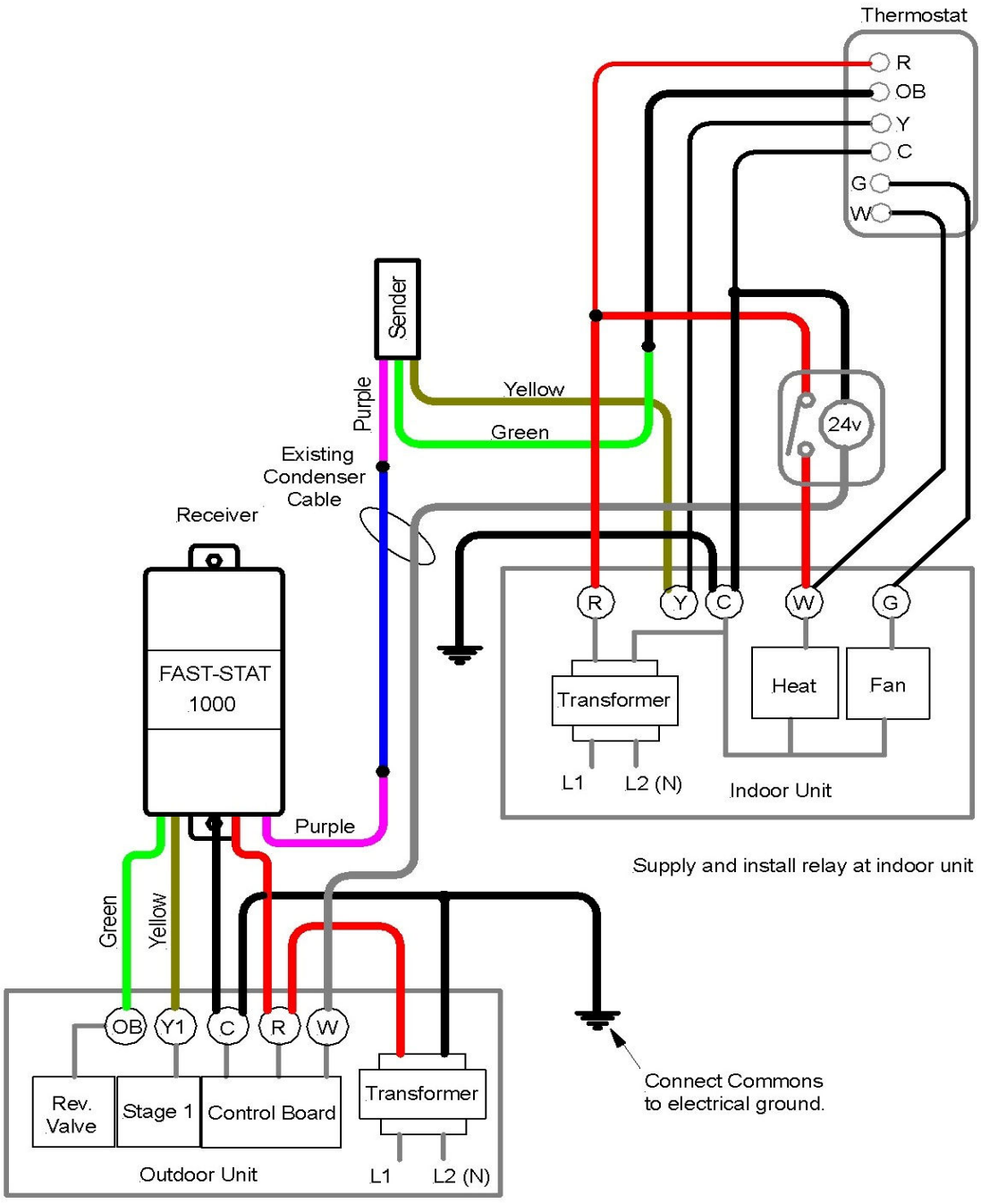

**Model 1000 used to extend wiring from a thermostat.**
**Example: Adding a common "C" to a thermostat.**

DWG: 1K-E

**Typical Wiring Before Installing Model 1000**

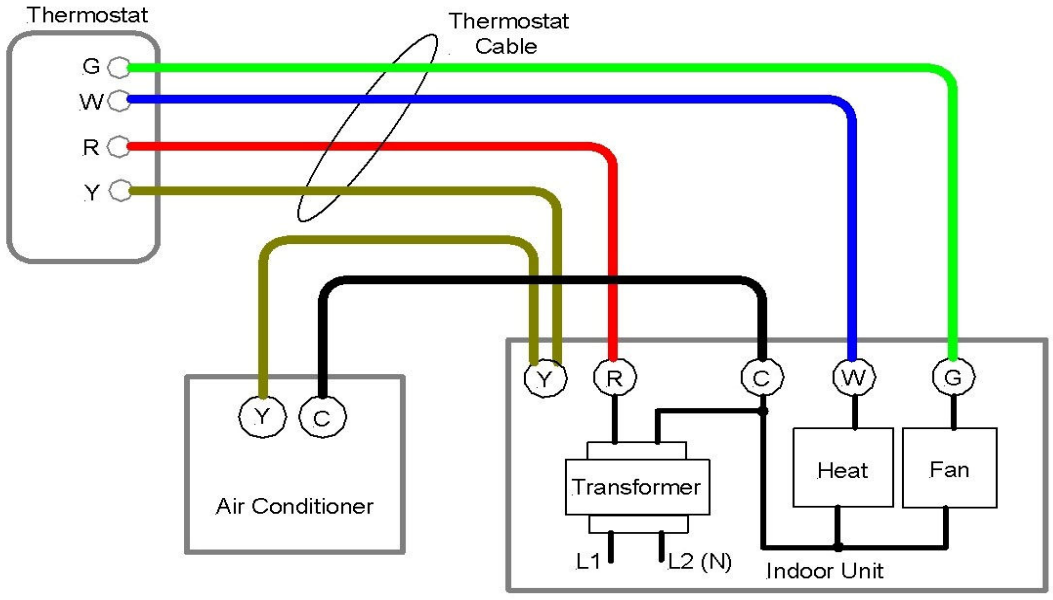


**Typical Wiring After Installing Model 1000**

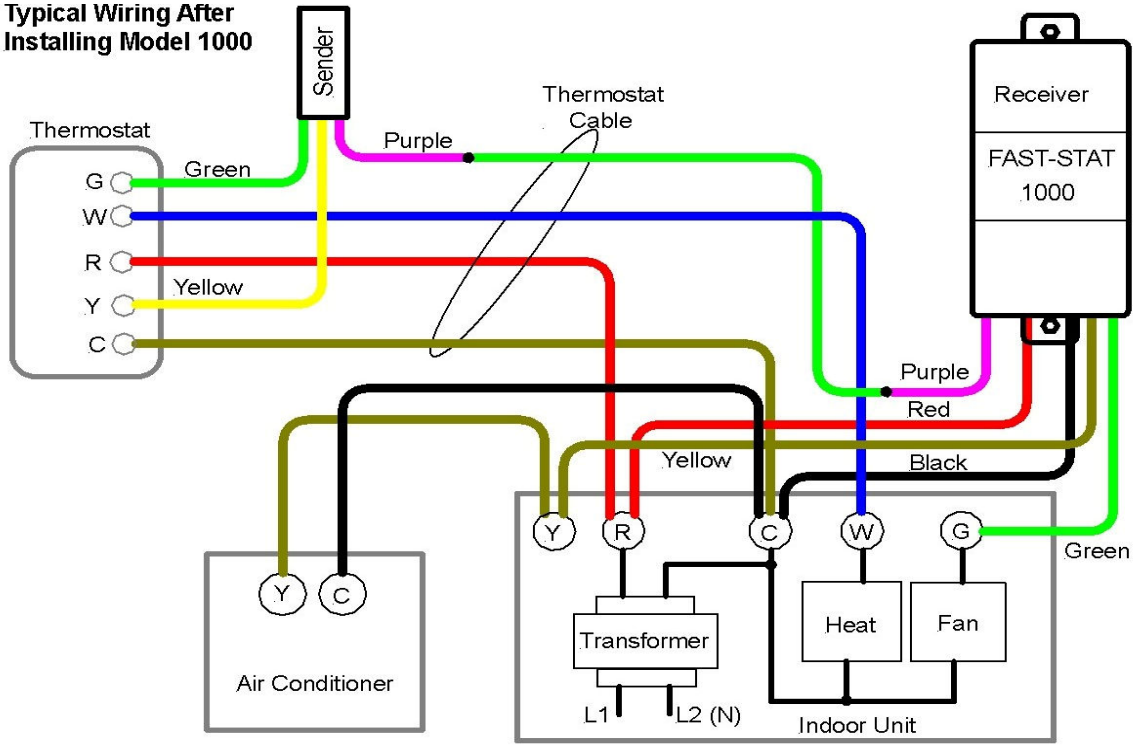

**Model 1000 used to repair a damaged cable.**
**Example: Cable has one broken (open) wire.**

DWG: 1K-F

**Typical Wiring Before Installing Model 1000**

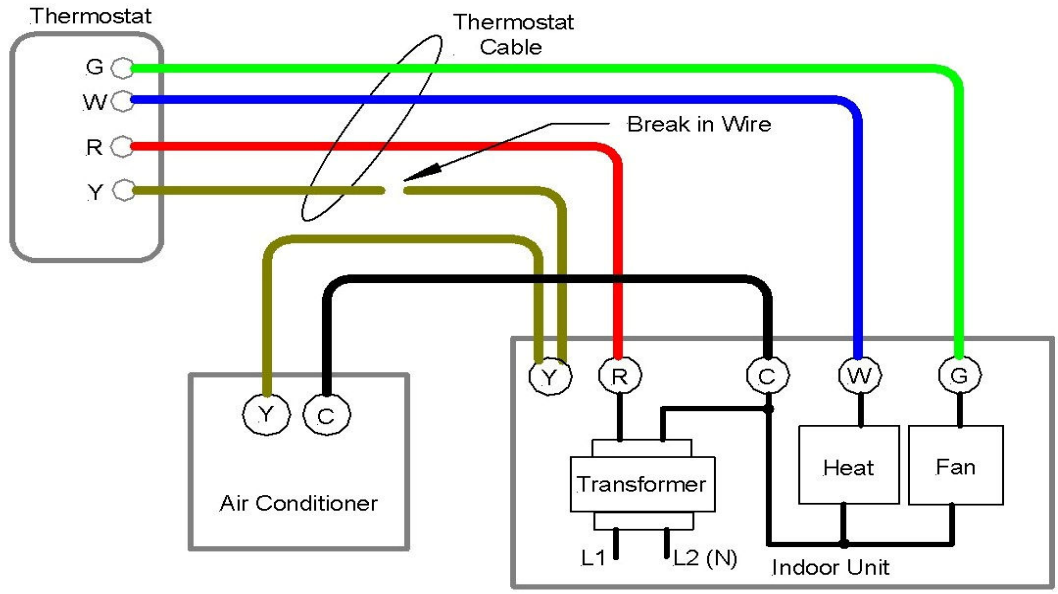


**Typical Wiring After Installing Model 1000**

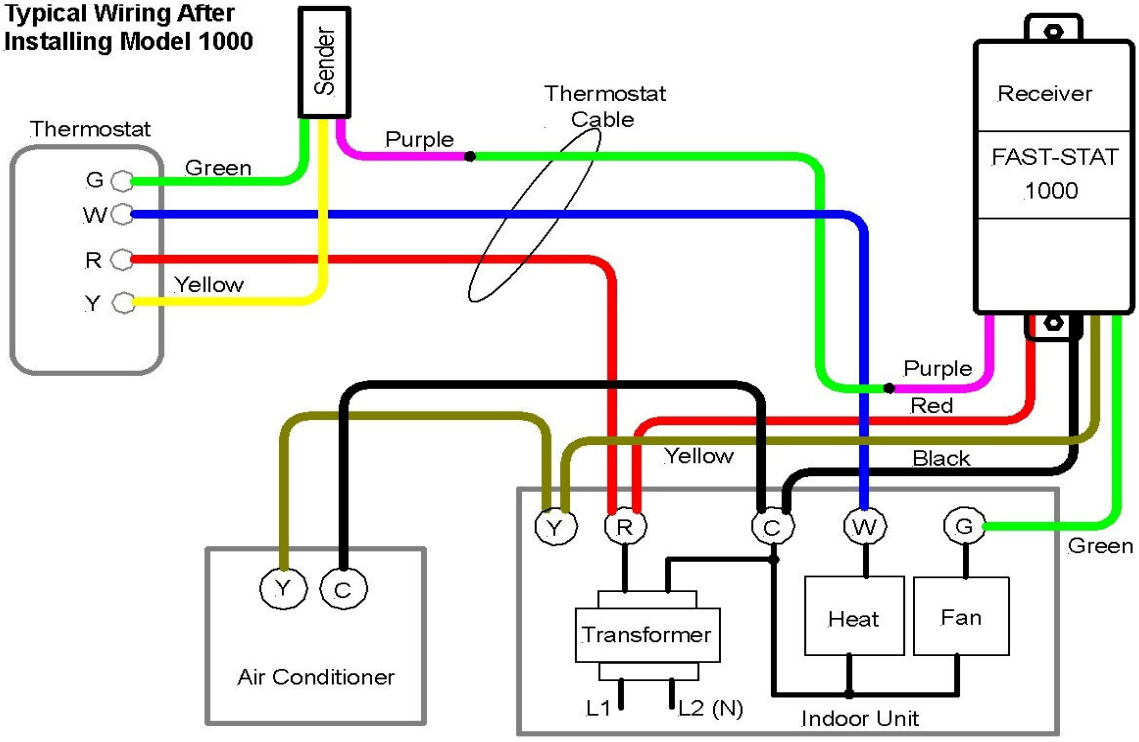

# Model 1000 Testing Method
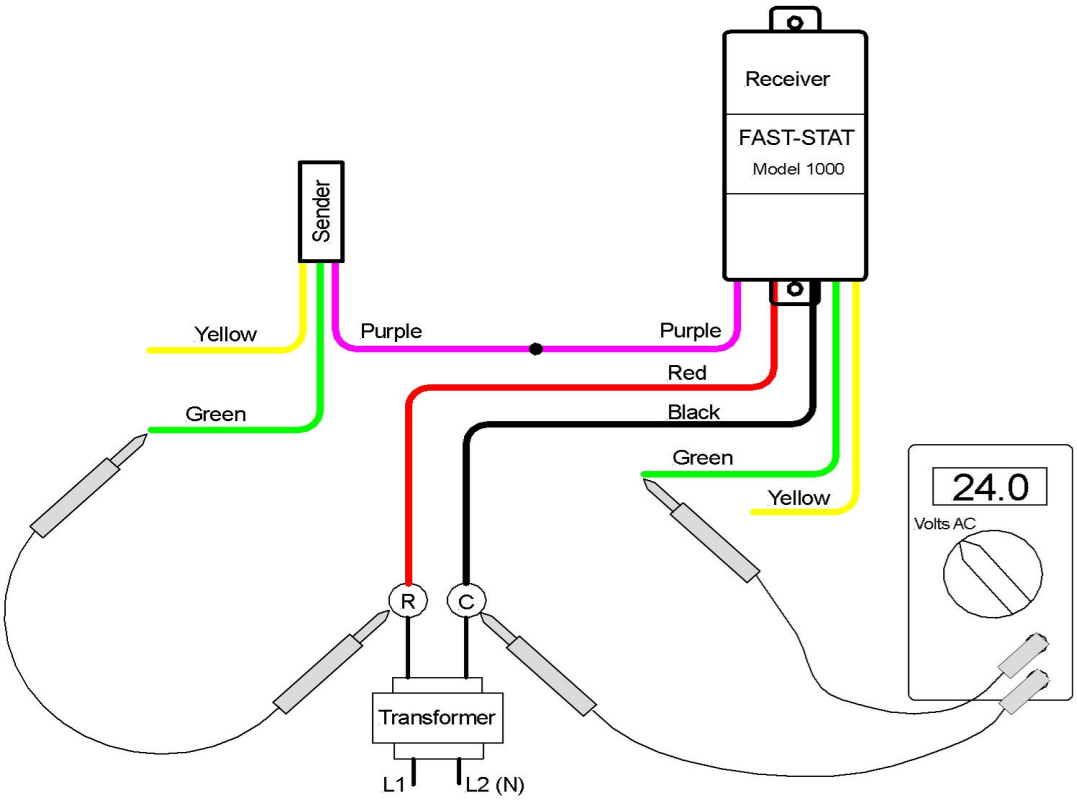
1. Measure the transformer voltage (often marked as R and C). The meter should read from 24 to 28 volts AC. For furnaces, make sure the door switch is in the on position.
2. Connect the Sender directly to the Receiver: PURPLE to PURPLE, and then connect the Receiver BLACK to transformer C, RED to transformer R.
3. Connect the Sender GREEN to the transformer R. The relay in the Receiver should switch on. With Sender GREEN still connected to the transformer R, measure the voltage between the Receiver GREEN wire and the transformer C. The meter should read 24 to 28 volts.
4. Connect the Sender YELLOW to the transformer R. The relay in the Receiver should switch on. With Sender YELLOW still connected to the transformer R, measure the voltage between the Receiver YELLOW wire and the transformer C. The meter should read 24 to 28 volts.