RHS

Product Specifications

ASHRAE 90.1 COMPLIANT PACKAGED ROOFTOP HEAT PUMP UNITS, R–410A, 15 – 20 TONS

BUILT TO LAST, EASY TO INSTALL AND SERVICE

- IEER's up to 11.5 with single speed indoor fan motor and up to 12.0 with 2–speed/VFD indoor fan motor
- One–piece electric heating and electric cooling units with a low profile, prewired, tested, and charged at the factory
- Dedicated vertical or horizontal air flow duct configuration models. No field kits required.
- Full perimeter base rail with built-in rigging adapters and fork truck slots
- Pre–painted exterior panels and primer–coated interior panels tested to 500 hours salt spray protection
- Fully insulated cabinet
- Two-stage cooling with independent circuits and control on all models
- Scroll compressors with internal line–break overload protection on all models
- All units have loss of charge, freeze protection and high pressure switches
- Two inch disposable fiberglass type return air filters in dedicated rack with tool–less filter access door
- Liquid line filter drier and refrigerant accumulator on each circuit
- Dependable time/temperature defrost logic provides a defrost cycle, if needed, every 30, 60, 90, or 120 minutes and is adjustable
- Copper round tube and aluminum plate fin condenser and evaporator coils
- Exclusive non–corrosive composite condensate pan in accordance with ASHRAE 62 Standard, sloping design; end drain
- Belt drive evaporator–fan motor and pulley combinations available to meet most applications
- Access panels with easy grip handles provide quick and easy access to the blower and blower motor, control box, and compressors.
- "No–strip" screw system has superior holding power and guides screws into position while preventing the screw from stripping the unit's metal.
- Newly designed terminal board facilitates simple safety circuit troubleshooting and simplified control box arrangement
- Outdoor temperature cooling operation range up to 115°F (46°C) and down to 30°F (–15°C). Low ambient controls are available for cooling operation down to –20°F (–29°C).
- TXV metering devices on all models to precisely control refrigerant flow
- Large, laminated control wiring and power wiring drawings are affixed to unit to make troubleshooting easy
- Standard, medium and high static fan motor options available (Standard static not available on horizontal 20 ton models)
- Optional 2–Speed Indoor Fan Motor System utilizes a Variable Frequency Drive (VFD) to automatically adjust the indoor fan motor speed between cooling stages. Available on 2–stage cooling models
- Provisions for thru–the–bottom or side power entry capability
- Single point electrical connections

15 Ton

Use of the AHRI Certified TM Mark indicates a manufacturer's participation in the program. For verification of certification for individual products, go to www.ahridirectory.org .

WARRANTY

- 5 Year compressor limited warranty
- 1 Year parts limited warranty

UNIT PERFORMANCE DATA – Two Stage Cooling

UNIT	Dedicated Airflow	Nom. Tons	COOLING Net Cap. (Btuh)	COOLING EER	HEATING HighCap. (Btuh)	HEATING COP	Total Power (kW)	Unit Dimensions H x W x L	Unit Weight lb. [kg]
RHS181*0AA0AAA	Vertical	15	172,000	10.8	166,000	3.3	15.9	49–3/8" x 86–3/8" x 127–7/8" (1253 x 2194 x 3249)	1775 [807]
RHS183*0AA0AAA	Horizontal	15	172,000	10.8	166,000	3.3	15.9	49–3/8" x 86–3/8" x 127–7/8" (1253 x 2194 x 3249)	1775 [807]
RHS240*0AA0AAA	Vertical	20	232,000	10.6	220,000	3.3	21.9	49–3/8" x 86–3/8" x 141–1/2" (1253 x 2194 x 3595)	2100 [955]
RHS243*0AA0AAA	Horizontal	20	232,000	10.6	220,000	3.3	21.9	49–3/8" x 86–3/8" x 141–1/2" (1253 x 2194 x 3595)	2100 [955]

* Indicates Unit voltage: H = 208/230–3–60, L = 460–3–60, S = 575–3–60

NOTE: BASE MODEL NUMBERS LISTED. SEE MODEL NOMENCLATURE LISTING FOR ADDITIONAL OPTIONS

516 71 2902 00
02/21/14

TABLE OF CONTENTS

	PAGE
MODEL NUMBER NOMENCLATURE	3
FACTORY OPTIONS AND/OR ACCESSORIES	4
AHRI COOLING/HEATING RATING TABLE	9
SOUND PERFORMANCE TABLE	9
PHYSICAL DATA	10
ELECTRIC HEAT ELECTRIC DATA	12
CURBS & WEIGHTS DIMENSIONS	14
APPLICATION DATA	23
COOLING TABLES	24
HEATING TABLES	26
STATIC PRESSURE ADDERS	27
FAN PERFORMANCE	28
OUTDOOR AIR INTAKE & EXHAUST PERF	31
ELECTRICAL INFO	32
WIRE/FUSE OR HACR BREAKER SIZING	34
TYPICAL WIRING DIAGRAMS	44
SEQUENCE OF OPERATION	47
GUIDE SPECIFICATIONS	49

15 & 20 TON ROOFTOP UNIT FIOP CODES (Use with Model Nomenclature on next page)

OPTION	DESCRIPTION
2	Non−Fused Disconnect Switch
4	Easy Access Hinged Panels
5	Unpowered Convenience Outlet
9	Supply Air Smoke Detector

NOMENCLATURE CODE	OPTIONS
0A	None
4B	2
AT	5
BR	9
7C	2, 5
7K	2,5,9
BA	5, 9
8A	2, 9
AA	4
6C	2, 4
6D	2, 4, 5
6L	2, 4, 5, 9
7B	2, 4, 9
AB	4, 5
AJ	4, 5, 9
CH	4, 9

MODEL NOMENCLATURE

MODEL SERIES	R	H	S	1	8	1	H	0	A	B	0	A	A	A
Position Number	1	2	3	4	5	6	7	8	9	10	11	12	13	14

Type

R = Rooftop

H = Heat Pump
A = Air Conditioning (Cooling Only)
G = Gas/Electric

Efficiency

S = Standard ASHRAE 90.1-2010 Efficiency

Nominal Cooling Capacity

181 = 181,000 = 15 Tons Dedicated Vertical SA/RA (SA = Supply Air, RA = Return Air)
183 = 180,000 = 15 Tons Dedicated Horizontal SA/RA
240 = 240,000 = 20 Tons Dedicated Vertical SA/RA
243 = 240,000 = 20 Tons Dedicated Horizontal SA/RA

Voltage

H = 208/230-3-60
L = 460-3-60
S = 575-3-60

Heating Capacity

0 = No Heat

Motor Option

A = Standard Option (not available on horizontal 243 unit)
B = High Static Option (15 ton only w/ 1-Speed IFM, 15 & 20 Ton with 2-Speed IFM)
E = High Static Option - High Efficiency Motor (20 ton only w/ 1-Speed IFM)
C = Medium Static Motor (15 ton only w/ 1-Speed IFM, 15 & 20 Ton with 2-Speed IFM)
F = Medium Static Option - High Efficiency Motor (20 ton only w/ 1-Speed IFM)

Outdoor Air Options / Control

A = None
B = Economizer w/Bara-relief, OA Temp sensor
E = Economizer w/Bara-relief + CO_2 sensor, OA Temp sensor
H = Economizer w/Bara-relief, Enthalpy sensor
L = Economizer w/Bara-relief + CO_2 sensor, Enthalpy sensor
U = Ultra Low Leak Temp Economizer w/Baro-relief
W = Ultra Low Leak Enthalpy Economizer w/Baro-relief
P = 2-Position damper w/Baro-relief

Factory Installed Options

0A = No Options
4B = Non-fused Disconnect
AT = Non-powered 115v Convenience Outlet.
AA = Hinged Access Panels
BR = Supply Air Smoke Detector

Condenser / Evaporator Coil Configuration

A = Standard - Alum. Fin / Copper Tubes, Condenser & Evap
B = Pre-coated Alum. Fin / Copper Tubes Condenser Coils, Standard Evap. Coil
C = E-Coated Alum. Fin / Copper Tubes Condenser Coils, Standard Evap. Coil
D = E-Coated Alum. Fin / Copper Tubes Condenser & Evap. Coils
E = Copper Fin / Copper Tube Condenser Coils, Standard Evap. Coil
F = Copper Fin / Copper Tube Condenser & Evap Coils

Motor Type Option

A = Standard Motor
T = 2 Speed Indoor Fan VFD Controller (For 2-stage units only)

Table 1 – FACTORY INSTALLED OPTIONS AND FIELD INSTALLED ACCESSORIES

CATEGORY	ITEM	FACTORY INSTALLED OPTION	FIELD INSTALLED ACCESSORY
Cabinet	Dedicated Vertical Air Flow Duct Configuration	X	
	Dedicated Horizontal Air Flow Duct Configuration	X	
	Hinged Access Panels	X	
Coil Options	Cu/Cu (indoor and outdoor) coils	X	
	E–coated (indoor & outdoor) coils	X	
	Pre–coated (indoor & outdoor) coils	X	
Condenser Protection	Condenser coil hail guard (louvered design)	X	X
Controls	Smoke detector (supply air)	X	
	Time Guard II compressor delay control circuit		X
	Phase Monitor		X
Economizers & Outdoor Air Dampers	Economizer IV (for electro–mechanical controlled RTUs)	X	X
	Motorized 2 position outdoor–air damper	X	X
	Manual outdoor–air damper		X
	Barometric relief[1]	X	X
	Power exhaust		X
	Ultra Low Leak Economizer X (for 2–Speed Indoor Fan Motor System, all sizes with 2 stages of cooling). Horizontal & vertical.	X	X
Economizer Sensors & IAQ Devices	Single dry bulb temperature sensors[2]	X	X
	Differential dry bulb temperature sensors[2]		X
	Single enthalpy sensors[2]	X	X
	Differential enthalpy sensors[2]		X
	CO_2 sensor (wall, duct, or unit mounted)[3]	X	X
Electric Heat	Electric Heaters		X
	Single Point Kit		X
Indoor Motor & Drive	Multiple motor and drive packages	X	
	2–Speed Indoor Fan Motor System w/VFD controller (2–stage cool only)	X	
	Display Kit for 2–Speed Indoor Fan Motor System with VFD		X
Low Ambient Control	Motormaster head pressure controller[3]		X
Power Options	Convenience outlet (unpowered)	X	
	Non–fused disconnect [4]	X	
Roof Curbs	Roof curb 14–in (356mm)		X
	Roof curb 24–in (610mm)		X

NOTES:
1. Included with economizer.
2. Sensors used to optimize economizer performance.
3. See application data for assistance.
4. Non–fused disconnect switch cannot be used when unit FLA rating exceeds 200 amps on 208/230 volt and 100 amps on 460/575 volt units.

FACTORY OPTIONS AND/OR ACCESSORIES

Economizer (dry−bulb or enthalpy)

Economizers save money. They bring in fresh, outside air for ventilation; and provide cool, outside air to cool your building. This is the preferred method of low−ambient cooling. When coupled to CO_2 sensors, Economizers can provide even more savings by coupling the ventilation air to only that amount required.

Economizers are available, installed and tested by the factory, with either enthalpy or dry−bulb temperature inputs. There are also models for electromechanical as well as direct digital controllers. Additional sensors are available as accessories to optimize the economizers.

Economizers include gravity controlled, barometric relief equalizes building pressure and ambient air pressures. This can be a cast effective solution to prevent building pressurization. If further control of exhaust air is required, a dual centrifugal fan power exhaust system is also available.

CO_2 Sensor

Improves productivity and saves money by working with the economizer to intake only the correct amount of outside air for ventilation. As occupants fill your building, the CO_2 sensor detects their presence through increasing CO_2 levels, and opens the economizer appropriately.

When the occupants leave, the CO_2 levels decrease, and the sensor appropriately closes the economizer. This intelligent control of the ventilation air, called Demand Control Ventilation (DCV) reduces the overall load on the rooftop, saving money.

Smoke Detectors

Smoke detectors make your application safer and your job easier. Smoke detectors immediately shut down the rooftop unit when smoke is detected. They are available, installed by the factory for supply air.

Louvered Hail Guards

Sleek, louvered panels protect the condenser coil from hail damage, foreign objects, and incidental contact.

Convenience Outlet (un−powered)

Reduce service and/or installation costs by including a convenience outlet in your specification. Installed at the factory, this feature provides a convenient, 15 amp, 115v GFCI receptacle with “Wet in Use” cover. The “unpowered” option is to be powered from a separate 115/120v power source.

Non−Fused Disconnect

This OSHA−compliant, factory−installed, safety switch allows a service technician to locally secure power to the rooftop.

Power Exhaust with Barometric Relief

Superior internal building pressure control. This field−installed accessory or factory−installed option may eliminate the need for costly, external pressure control fans.

Time Guard II Control Circuit

This accessory protects your compressor by preventing short−cycling in the event of some other failure, prevents the compressor from restarting for 30 seconds after stopping.

Filter or Fan Status Switches

Use these differential pressure switches to detect a filter clog or indoor fan motor failure. When used in conjunction with a compatible unit controller/thermostat, the switches will activate an alarm to warn the appropriate personnel.

Motorized 2−Position Damper

The 2−position, motorized outdoor air damper admits up to 100% outside air. Using reliable, gear−driven technology, the 2−position damper opens to allow ventilation air and closes when the rooftop stops, stopping unwanted infiltration.

Manual OA Damper

Manual outdoor air dampers are an economical way to bring in ventilation air. The dampers are available in 25% versions.

2−Speed Indoor Fan Speed Motor System

The 2−Speed Indoor Fan Motor System saves energy and installation time by utilizing a Variable Frequency Drive (VFD) to automatically adjust the indoor fan motor speed in sequence with the units cooling operation. Per ASHRAE 90.1 2010 standard section 6.4.3.10.b, during the first stage of cooling operation the VFD will adjust the fan motor to provide 2/3rd of the total cfm established for the unit. When a call for the second stage of cooling is required, the VFD will allow the total cfm for the unit established (100%). During the heating mode the VFD will allow total design cfm (100%) operation and during the ventilation mode the VFD will allow operation to 2/3rd of total cfm.

Compared to 1−speed indoor fan motor systems, the 2−Speed Indoor Fan Motor System can save substantial energy, 25%+/−, versus 1−speed indoor fan motor systems.

The VFD used in the 2−Speed Indoor Fan Motor System has soft start capabilities to slowly ramp up the speeds, thus eliminating any high inrush air volume during initial start−up. It also has internal over−current protection for the fan motor and a field installed display kit that allows adjustment and in depth diagnostics of the VFD.

This 2−Speed Indoor Fan Motor System is available on models with 2−stage cooling operation with electromechanical or RTU Open, Multi Protocol controls. Both space sensor and conventional thermostats/controls can be used to provide accurate control in any application.

The 2−Speed Indoor Fan Motor System is very flexible for initial fan performance set up and adjustment. The standard factory shipped VFD is pre−programmed to automatically stage the fan speed between the first and second stage of cooling. The unit fan performance static pressure and cfm can be easily adjusted using the traditional means of pulley adjustments. The other means to adjust the unit static and cfm performance is to utilize the field installed Display Kit and adjust the frequency and voltage in the VFD to performance requirements. In either case, once set up, the VFD will automatically adjust the speed between the cooling stage operations.

Hinged Access Panels

Allows access to unit’s major components with specifically designed hinged access panels. Panels are: filters, control box, fan motor and compressor.

Motormaster Head Pressure Controller

The Motormaster motor controller is a low ambient, head pressure controller kit that is designed to maintain the unit's condenser head pressure during periods of low ambient cooling operation. This device should be used as an alternative to economizer free cooling not when economizer usage is either not appropriate or desired. The Motormaster will either cycle the outdoor−fan motors or operate them at reduced speed to maintain the unit operation, depending on the model.

Alternate Motors and Drives

Some applications need larger horsepower motors, some need more airflow, and some need both. A wide selection of motors and pulleys (drives) are available, factory installed, to handle nearly any application.

Electric Heaters / Single Point Kit

A full−line of field−installed accessory heaters and single point kits are available.

Barometric Hood

For Horizontal Economizer applications where relief damper is installed in duct work. This kit provides the needed protection.

Thru−the−Base Connections

Thru−the−base provisions/connection points are available as standard with every unit. When bottom connections are required, field furnished couplings are required.

ACCESSORIES – RHS181–243

FLAT ROOF CURBS		
Model Number	**Description**	**Use With Model Size**
CRRFCURB045A00	14” High Roof Curb * Vertical and Horizontal Economizer IV with solid state controller, gear driven, modulating damper, spring return actuator, up to 100% barometric relief, supply and outdoor air sensors and outdoor air hood. CO2 sensor compatible.	181/183
CRRFCURB047A00		240/243
CRRFCURB046A00	24” High Roof Curb * Vertical and Horizontal Economizer IV with solid state controller, gear driven, modulating damper, spring return actuator, up to 100% barometric relief, supply and outdoor air sensors and outdoor air hood. CO2 sensor compatible.	181/183
CRRFCURB048A00		240/243

ECONOMIZERS*[1, 2]		
Model Number	**Description**	**Use With Model Size**
DNECOMZR052A00	Economizer IV, Vertical & Horizontal with solid state controller	181/183 – 240/243
CRECOMZR074A00	Ultra Low Leak Horizontal & Vertical Economizer X with solid–state controller, gear–driven, fully modulating damper, spring return actuator, up to 100% barometric relief, supply and outdoor air sensors, and CO2 sensor compatible.	181/183 – 240/243

* Barometric relief hood is not included in the horizontal economizer and must be installed in return ductwork on Horizontal configured models. Order separately, see below, CRBARHOD001A00.
[1] Economizer X cannot be installed with Economizer IV, manual damper, or motorized damper.
[2] Can only be used on electrical mechanical units with 2–stage cooling and 2–speed fan control.

BARAMETRIC RELIEF HOOD		
Model Number	**Description**	**Use With Model Size**
CRBARHOD001A00	Barometric Hood – For Horizontal Economizer applications where relief damper is installed in duct work, This kit provides the needed protection.	Horizontal Economizers (183 – 243)

ECONOMIZER SENSORS		
Model Number	**Description**	**Use With Model Size**
DNTEMPSN002A00	Single (dry bulb) Control	Economizer IV
DNCBDIOX005A00	CO2 Sensor and aspirator box for use in return airstream.	Economizers IV & X
DNENTDIF004A00	Return Air Enthalpy Sensor (Use with AXB078ENT for differential enthalpy control	Economizer IV
AXB078ENT	Enthalpy Control	Economizer IV
CRTEMPSN005A00	Outdoor or Return Dry Bulb Temp Sensor	Economizer X
HH57AC081	Enthalpy control (One required for single enthalpy, two for differential)	Economizer X

POWER EXHAUST*		
Model Number	**Description**	**Use With Model Size**
CRPWREXH068A00	Vertical and Horizontal, 208/230–3–60	181/183 – 240/243
CRPWREXH069A00	Vertical and Horizontal, 460–3–60	181/183 – 240/243
CRPWREXH070A00	Vertical and Horizontal, 575–3–60	181/183 – 240/243

MANUAL OUTDOOR AIR DAMPERS		
Model Number	**Description**	**Use With Model Size**
CRMANDPR009A00	25% Open Manual Fresh Air Damper	181/183 – 240/243

MOTORIZED OUTDOOR AIR DAMPERS		
Model Number	**Description**	**Use With Model Size**
CRTWOPOS012A00	Motorized 2 position outdoor air damper	181/183 – 240/243

LOW AMBIENT CONTROLS		
Model Number	**Description**	**Use With Model Size**
CRLOWAMB041A00	Motormaster® I –20° Low Ambient Control 208/230–3–60	181/183 – 240/243
CRLOWAMB042A00	Motormaster® I –20° Low Ambient Control 460–3–60, 575–3–60	181/183 – 240/243
CRTRXKIT001A00	Motormaster® I –20° Transformer 575–3–60[1]	181/183 – 240/243

* When power exhaust is used on horizontal applications, it must be field mounted to the side of the return duct.
[1] Must use in conjunction with CRLOWAMB042A00 if used on 575–3–60 models.
[2] This control allows mechanical cooling operation down to 30° F (-1° degrees C). If mechanical cooling below 25° F (-4° C) is necessary, consider low ambient control measures such as MotorMaster or economizer.

ACCESSORIES – RHS181–243 (cont.)

CONTROL UPGRADE KITS		
Model Number	**Description**	**Use With Model Size**
CRSMKKIT002A00	Smoke Detector Control Module (Smoke Detector Sensor with sampling tube & exhaust tube)	181 – 243
NRTIMEGD001A00	Time Guard II	181 – 243
CRSDTEST001A00	Smoke detector remote Test/Reset/Alarm indicator kit	181 – 243
CRPHASE3001A02	Electronic Phase Monitor – All 208/230/460–3–60 models	181 – 243
CRPHASE3002A00	Electronic Phase Monitor – All 575–3–60 models	181 – 243
CRSTATUS005A00	Fan/filter Status Switch – Indicator light not included	181 – 243
CRSMKSEN002A00	Smoke Detector Control Module	181 – 243
4” FILTER TRACK UPGRADE KIT		
Model Number	**Description**	**Use With Model Size**
CRFLTTRK001A00	4” Field Conversion Kit	181 – 243
LOUVERED HAIL GUARDS		
Model Number	**Description**	**Use With Model Size**
CRLVHLGD017A00	Louvered Condenser Coil Hail Guard	181/183
CRLVHLGD026A00	Louvered Condenser Coil Hail Guard	240/243

ELECTRIC HEAT – HORIZONTAL DUCT CONFIGURATION		
Model Number	**Nominal kW**	**Use With Model Size**
CRHEATER270A00	25.0	All Horizontal Duct 208/230v Models
CRHEATER271A00	50.0	
CRHEATER272A00	75.0	
CRHEATER273A00	25.0	All Horizontal Duct 460v Models
CRHEATER274A00	50.0	
CRHEATER275A00	75.0	
CRHEATER276A00	24.8	All Horizontal Duct 575v Models
CRHEATER277A00	49.6	
CRHEATER278A00	74.4	
ELECTRIC HEAT – VERTICAL DUCT CONFIGURATION		
Model Number	**Nominal kW**	**Use With Model Size**
CRHEATER279A00	25.0	All Vertical Duct 208/230v Models
CRHEATER280A00	50.0	
CRHEATER281A00	75.0	
CRHEATER282A00	25.0	All Vertical Duct 460v Models
CRHEATER283A00	50.0	
CRHEATER284A00	75.0	
CRHEATER285A00	24.8	All Vertical Duct 575v Models
CRHEATER286A00	49.6	
CRHEATER287A00	74.4	
SINGLE POINT CONNECTION KIT		
Model Number	**Description**	**Use With Electric Heater**
CRSINGLE056A00	Single Point Connection for 208/230V Heaters	CRHEATER270–272A00 CRHEATER279–281A00
CRSINGLE057A00	Single Point Connection for 460V & 575V Heaters	CRHEATER273–278A00 CRHEATER282–287A00

Table 2 – AHRI COOLING / HEATING RATING TABLES

COOLING MODE – 2 STAGE							
MODEL RHS	COOLING STAGES	Nominal Capacity (tons)	Net Cooling Capacity (BTUH)	Total Power (kW)	EER	IEER w/1–Speed IFM	IEER w/2–Speed IFM
181 – 183	2	15	172,000	15.9	10.8	11.5	12.0
240 – 243*	2	20	232,000	21.9	10.6	11.1	12.0

HEATING MODE				
MODEL RHS	Heating, Low (BTUH)		Heating, High (BTUH)	
	Capacity (BTUH)	COP	Capacity (BTUH)	COP
181 – 183	103,000	2.4	166,000	3.3
240 – 243*	136,000	2.3	220,000	3.3

* AHRI rated cfm is 6500 for vertical units and 6000 for horizontal units

LEGEND

AHRI – Air–Conditioning, Heating & Refrigeration Institute
ASHRAE – American Society of Heating, Refrigerating and Air Conditioning, Inc.
COP – Coefficient of performance
EER – Energy Efficiency Ratio
IEER – Integrated Energy Efficiency

Use of the AHRI Certified TM Mark indicates a manufacturer's participation in the program. For verification of certification for individual products, go to www.ahridirectory.org .

NOTES:

1. Rated and certified under AHRI Standard 340/360–04, as appropriate.
2. Ratings are based on:
Cooling Standard: 80°F (27°C) db, 67°F (19°C) wb indoor air temp and 95°F (35°C) db outdoor air temp.
IEER Standard: A measure that expresses cooling part–load EER efficiency for commercial unitary air conditioning and heat pump equipment on the basis of weighted operation at various load capacities.
3. All RHS units comply with ASHRAE 90.1 Energy Standard for minimum EER and IEER requirements.
4. RHS units comply with US Energy Policy Act (2005). To evaluate code compliance requirements, refer to state and local codes or visit the following website: http://bcap–energy.org to determine if compliance with this standard pertains to your state, territory, or municipality.

Table 3 – SOUND PERFORMANCE TABLE

MODEL RHS	COOLING STAGES	Outdoor Sound (dB)									
		A–Wtg.	AHRI 370 Rating	63	125	250	500	1000	2000	4000	8000
181 – 183	2	84.1	84	92.2	83.9	80.4	81.8	78.7	76.5	72.2	65.4
240 – 243	2	86.5	87	95.6	87.5	84.2	84.2	81.7	77.9	73.2	66.3

LEGEND

dB – Decibel

NOTES:

1. Outdoor sound data is measured in accordance with AHRI standard 270–2008.
2. Measurements are expressed in terms of sound power. Do not compare these values to sound pressure values because sound pressure depends on specific environmental factors which normally do not match individual applications. Sound power values are independent of the environment and therefore more accurate.
3. A–weighted sound ratings filter out very high and very low frequencies, to better approximate the response of "average" human ear. A–weighted measurements are taken in accordance with AHRI standard 270–2008.

Table 4 – PHYSICAL DATA (COOLING) 15 – 20 TONS

UNIT	RHS	181/183	240/243
Refrigeration System			
	# Circuits / # Comp. / Type	2 / 2 / Scroll	2 / 2 / Scroll
	R−410a charge A/B (lbs)	16.0/16.5	23.4/23.4
	High−press. Trip / Reset (psig)	630 / 505	630 / 505
	Low−press. Trip / Reset (psig)	24 / 45	24 / 45
Evap. Coil			
	Material	Cu / Al	Cu / Al
	Tube Diameter	3/8−in	3/8−in
	Rows / FPI	3 / 15	4 / 15
	Total face area (ft2)	19.56	22.00
	Condensate drain conn. size	3/4−in	3/4−in
Evap. fan and motor VERTICAL			
Standard Static	Motor Qty / Drive type	1 / Belt	1 / Belt
	Max BHP	2.2	4.9
	RPM range	514−680	690−863
	Motor frame size	56	56
	Fan Qty / Type	2 / Centrifugal	2 / Centrifugal
	Fan Diameter (in)	15 x 15	15 x 15
Medium Static	Motor Qty / Drive type	1 / Belt	n/a
	Max BHP	3.3	n/a
	RPM range	679−863	n/a
	Motor frame size	56	n/a
	Fan Qty / Type	2 / Centrifugal	n/a
	Fan Diameter (in)	15 x 15	n/a
High Static	Motor Qty / Drive type	1 / Belt	n/a
	Max BHP	4.9	n/a
	RPM range	826−1029	n/a
	Motor frame size	56	n/a
	Fan Qty / Type	2 / Centrifugal	n/a
	Fan Diameter (in)	15 x 15	n/a
Medium Static− High Efficiency	Motor Qty / Drive type	n/a	1 / Belt
	Max BHP (208/230/460/575v)	n/a	6.5/6.9/7.0/8.3
	RPM range	n/a	835−1021
	Motor frame size	n/a	184T
	Fan Qty / Type	n/a	2 / Centrifugal
	Fan Diameter (in)	n/a	15 x 15
High Static− High Efficiency	Motor Qty / Drive type	n/a	1 / Belt
	Max BHP (208/230/460/575v)	n/a	10.5/11.9/11.9/11.0
	RPM range	n/a	941−1176
	Motor frame size	n/a	213T
	Fan Qty / Type	n/a	2 / Centrifugal
	Fan Diameter (in)	n/a	15 x 15

TABLE 4 – PHYSICAL DATA (COOLING) 15 – 20 TONS (CONT.)

	UNIT: RHS	181/183	240/243
HORIZONTAL			
Standard Static	Motor Qty / Drive type	1 / Belt	n/a
	Max BHP	2.2	n/a
	RPM range	514–680	n/a
	Motor frame size	56	n/a
	Fan Qty / Type	2 / Centrifugal	n/a
	Fan Diameter (in)	18 x 15/15 X 11	n/a
Medium Static	Motor Qty / Drive type	1 / Belt	n/a
	Max BHP	3.3	n/a
	RPM range	614–780	n/a
	Motor frame size	56	n/a
	Fan Qty / Type	2 / Centrifugal	n/a
	Fan Diameter (in)	18 x 15/15 X 11	n/a
High Static	Motor Qty / Drive type	1 / Belt	n/a
	Max BHP	4.9	n/a
	RPM range	746–912	n/a
	Motor frame size	56	n/a
	Fan Qty / Type	2 / Centrifugal	n/a
	Fan Diameter (in)	18 x 15/15 X 11	n/a
Medium Static– High Efficiency	Motor Qty / Drive type	n/a	1 / Belt
	Max BHP (208/230/460/575v)	n/a	6.5/6.9/7.0/8.3
	RPM range	n/a	835–1021
	Motor frame size	n/a	184T
	Fan Qty / Type	n/a	2 / Centrifugal
	Fan Diameter (in)	n/a	18 x 15 / 15 x 11
High Static– High Efficiency	Motor Qty / Drive type	n/a	1 / Belt
	Max BHP (208/230/460/575v)	n/a	10.5/11.9/11.9/11.0
	RPM range	n/a	941–1176
	Motor frame size	n/a	213T
	Fan Qty / Type	n/a	2 / Centrifugal
	Fan Diameter (in)	n/a	18 x 15 / 15 x 11
Cond. Coil (Circuit A)			
	Coil type	RTPF	RTPF
	Coil Length (in)	70	82
	Coil Height (in)	44	44
	Rows / FPI	2 Rows / 17 FPI	2 Rows / 17 FPI
	Total face area (ft2)	21.4	25.1
Cond. Coil (Circuit B)			
	Coil type	RTPF	RTPF
	Coil Length (in)	70	82
	Coil Height (in)	44	44
	Rows / FPI	2 Rows / 17 FPI	2 Rows / 17 FPI
	Total face area (ft2)	21.4	25.1
Cond. fan / motor			
	Qty / Motor drive type	3 / direct	4 / direct
	Motor HP / RPM	1/4 / 1100	1/4 / 1100
	Fan diameter (in)	22	22
Filters			
	RA Filter # / size (in)	6 / 20 x 25 x 2	6 / 20 x 25 x 2
	OA inlet screen # / size (in)	4 / 16 x 25 x 1	4 / 16 x 25 x 1

RTPF — Round tube / plate fin design

ELECTRIC HEAT – ELECTRICAL DATA
2–STAGE COOLING SINGLE SPEED INDOOR FAN MOTOR

UNIT	NOM. V–Ph–Hz	IFM TYPE	ELECTRIC HEATER PART NUMBER CRHEATER***A00 VERT/HORZ	NOMINAL (kW)	APPLICATION (kW)	SINGLE POINT KIT PART NUMBER CRSINGLE***A00 NO C.O. or UNPWRD C.O. NO P.E.	w/ P.E. (pwrd fr/unit)
181/183	208/230–3–60	STD	279/270A00	25.0	18.8/23.0	056A00	056A00
			280/271A00	50.0	37.6/45.9	056A00	056A00
			281/272A00	75.0	56.3/68.9	056A00	056A00
		MED	279/270A00	25.0	18.8/23.0	056A00	056A00
			280/271A00	50.0	37.6/45.9	056	056A00
			281/272A00	75.0	56.3/68.9	056A00	056A00
		HIGH	279/270A00	25.0	18.8/23.0	056A00	056A00
			280/271A00	50.0	37.6/45.9	056A00	056A00
			281/272A00	75.0	56.3/68.9	056A00	056A00
	460–3–60	STD	282A/27300	25.0	23.0	057A00	057A00
			283/274A00	50.0	45.9	057A00	057A00
			284/275A00	75.0	68.9	057A00	057A00
		MED	282/273A00	25.0	23.0	057A00	057A00
			283/274A00	50.0	45.9	057A00	057A00
			284/275A00	75.0	68.9	057A00	057A00
		HIGH	282/273A00	25.0	23.0	057A00	057A00
			283/274A00	50.0	45.9	057A00	057A00
			284/275A00	75.0	68.9	057A00	057A00
	575–3–60	STD	285/276A00	24.8	22.8	–	–
			286/277A00	49.6	45.6	057A00	057A00
			287/278A00	74.4	68.3	057A00	057A00
		MED	285/276A00	24.8	22.8	–	–
			286/277A00	49.6	45.6	057A00	057A00
			287/278A00	74.4	68.3	057A00	057A00
		HIGH	285/276A00	24.8	22.8	–	–
			286/277A00	49.6	45.6	057A00	057A00
			287/278A00	74.4	68.3	057A00	057A00
240/243	208/203–3–60	STD**	279/–––A00	25.0	18.8/23.0	056A00	056A00
			280/–––A00	50.0	37.6/45.9	056A00	056A00
			281/–––A00	75.0	56.3/68.9	056A00	056A00
		MED–High Efficiency	279/270A00	25.0	18.8/23.0	056A00	056A00
			280/271A00	50.0	37.6/45.9	056A00	056A00
			281/272A00	75.0	56.3/68.9	056A00	056A00
		HIGH–High Efficiency	279/270A00	25.0	18.8/23.0	056A00	056A00
			280/271A00	50.0	37.6/45.9	056A00	056A00
			281/272A00	75.0	56.3/68.9	056A00	056A00
	460–3–60	STD**	282/–––A00	25.0	23.0	057A00	057A00
			283/–––A00	50.0	45.9	057A00	057A00
			284/–––A00	75.0	68.9	057A00	057A00
		MED–High Efficiency	282/271A00	25.0	23.0	057A00	057A00
			283/272A00	50.0	45.9	057A00	057A00
			284/273A00	75.0	68.9	057A00	057A00
		HIGH–High Efficiency	282/271A00	25.0	23.0	057A00	057A00
			283/272A00	50.0	45.9	057A00	057A00
			284/273A00	75.0	68.9	057A00	057A00
	575–3–60	STD**	285/–––A00	24.8	22.8	–	057A00
			286/–––A00	49.6	45.6	057A00	057A00
			287/–––A00	74.4	68.3	057A00	057A00
		MED–High Efficiency	285/276A00	24.8	22.8	–	057A00
			286/277A00	49.6	45.6	057A00	057A00
			287/278A00	74.4	68.3	057A00	057A00
		HIGH–High Efficiency	285/276A00	24.8	22.8	–	057A00
			286/277A00	49.6	45.6	057A00	057A00
			287/278A00	74.4	68.3	057A00	057A00

LEGEND

** STD IFM not available on horizontal 243. STD IFM is available on vertical 240

APP PWR – 208 / 230V / 460V / 575V
C.O. – Convenient outlet
IFM – Indoor fan motor
NOM PWR – 240V / 480V / 600V
P.E. – Power exhaust
UNPWRD – Unpowered convenient outlet

ELECTRIC HEAT – ELECTRICAL DATA
2–STAGE COOLING 2–SPEED INDOOR FAN MOTOR

UNIT	NOM. V–Ph–Hz	IFM TYPE	ELECTRIC HEATER PART NUMBER CRHEATER***A00 VERT/HORZ	NOMINAL (kW)	APPLICATION (kW)	SINGLE POINT KIT PART NUMBER CRSINGLE***A00 NO C.O. or UNPWRD C.O. NO P.E.	w/ P.E. (pwrd fr/unit)
181/183	208/230–3–60	STD	279/270A00	25.0	18.8/23.0	056A00	056A00
			280/271A00	50.0	37.6/45.9	056A00	056A00
			281/272A00	75.0	56.3/68.9	056A00	056A00
		MED	279/270A00	25.0	18.8/23.0	056A00	056A00
			280/271A00	50.0	37.6/45.9	056A00	056A00
			281/272A00	75.0	56.3/68.9	056A00	056A00
		HIGH	279/270A00	25.0	18.8/23.0	056A00	056A00
			280/271A00	50.0	37.6/45.9	056A00	056A00
			281/272A00	75.0	56.3/68.9	056A00	056A00
	460–3–60	STD	282/273A00	25.0	23.0	057A00	057A00
			283/274A00	50.0	45.9	057A00	057A00
			284/275A00	75.0	68.9	057A00	057A00
		MED	282/273A00	25.0	23.0	057A00	057A00
			283/274A00	50.0	45.9	057A00	057A00
			284/275A00	75.0	68.9	057A00	057A00
		HIGH	282/273A00	25.0	23.0	057A00	057A00
			283/274A00	50.0	45.9	057A00	057A00
			284/275A00	75.0	68.9	057A00	057A00
	575–3–60	STD	285/276A00	24.8	22.8	–	–
			286/277A00	49.6	45.6	057A00	057A00
			287/278A00	74.4	68.3	057A00	057A00
		MED	285/276A00	24.8	22.8	–	–
			286/277A00	49.6	45.6	057A00	057A00
			287/278A00	74.4	68.3	057A00	057A00
		HIGH	285/276A00	24.8	22.8	–	–
			286/277A00	49.6	45.6	057A00	057A00
			287/278A00	74.4	68.3	057A00	057A00
240/243	208/203–3–60	STD**	279/–––A00	25.0	18.8/23.0	056A00	056A00
			280/–––A00	50.0	37.6/45.9	056A00	056A00
			281/–––A00	75.0	56.3/68.9	056A00	056A00
		MED	279/270A00	25.0	18.8/23.0	056A00	056A00
			280/271A00	50.0	37.6/45.9	056A00	056A00
			281/272A00	75.0	56.3/68.9	056A00	056A00
		HIGH	279/270A00	25.0	18.8/23.0	056A00	056A00
			280/271A00	50.0	37.6/45.9	056A00	056A00
			281/272A00	75.0	56.3/68.9	056A00	056A00
	460–3–60	STD**	282/–––A00	25.0	23.0	057A00	057A00
			283/–––A00	50.0	45.9	057A00	057A00
			284/–––A00	75.0	68.9	057A00	057A00
		MED	282/273A00	25.0	23.0	057A00	057A00
			283/274A00	50.0	45.9	057A00	057A00
			284/275A00	75.0	68.9	057A00	057A00
		HIGH	282/273A00	25.0	23.0	057A00	057A00
			283/274A00	50.0	45.9	057A00	057A00
			284/275A00	75.0	68.9	057A00	057A00
	575–3–60	STD**	285/–––A00	24.8	22.8	–	057A00
			286/–––A00	49.6	45.6	057A00	057A00
			287/–––A00	74.4	68.3	057A00	057A00
		MED	285/276A00	24.8	22.8	–	057A00
			286/277A00	49.6	45.6	057A00	057A00
			287/278A00	74.4	68.3	057A00	057A00
		HIGH	285/276A00	24.8	22.8	–	057A00
			286/277A00	49.6	45.6	057A00	057A00
			287/278A00	74.4	68.3	057A00	057A00

LEGEND

** STD IFM not available on horizontal 243. STD IFM is available on vertical 240

APP PWR – 208 / 230V / 460V / 575V
C.O. – Convenient outlet
IFM – Indoor fan motor
NOM PWR – 240V / 480V / 600V
P.E. – Power exhaust
UNPWRD – Unpowered convenient outlet

BASE UNIT DIMENSIONS – RHS181/183 (SHEET 1 OF 2)

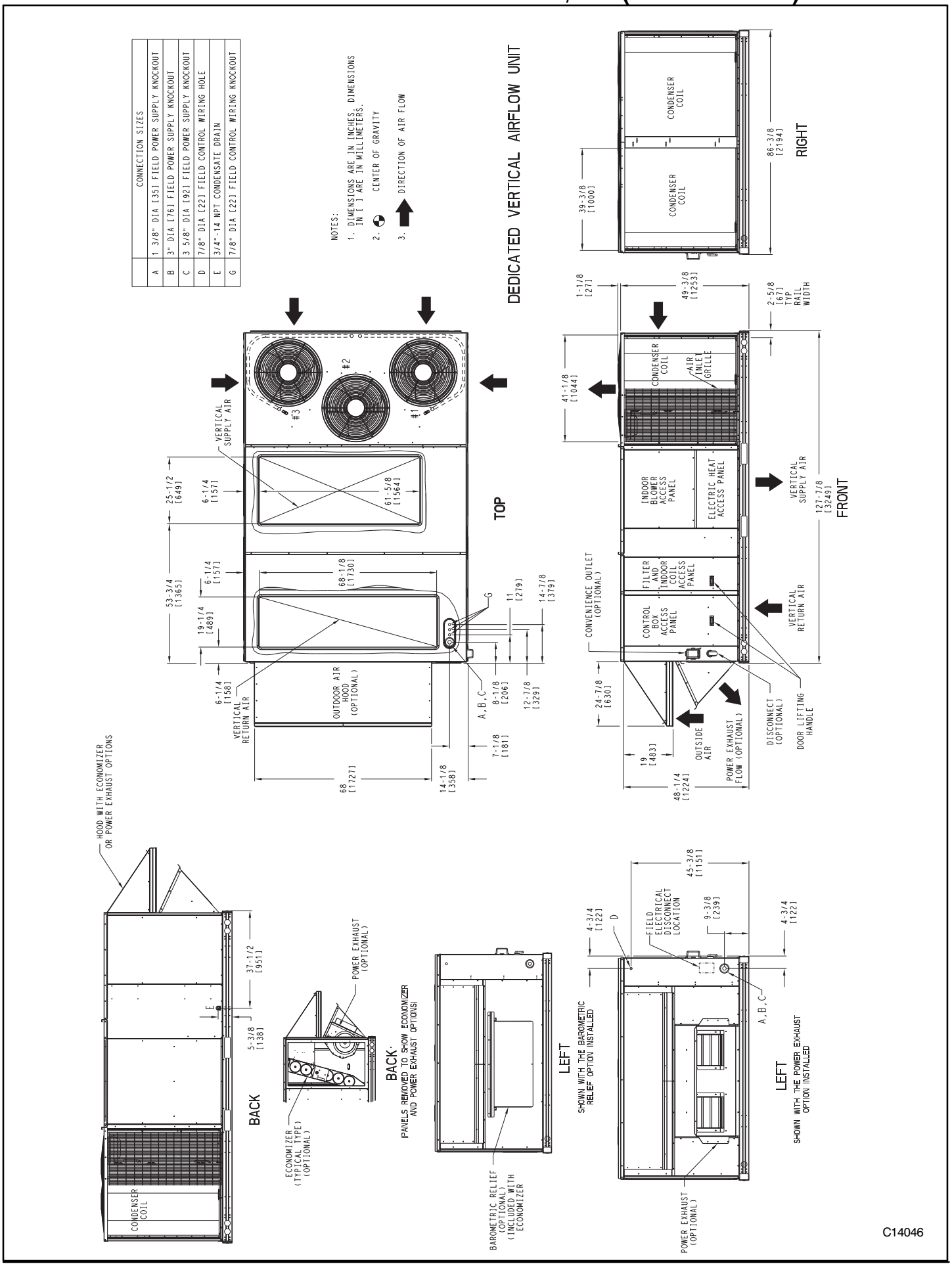

Specifications subject to change without notice.

BASE UNIT DIMENSIONS – RHS181/183 (SHEET 2 OF 2)

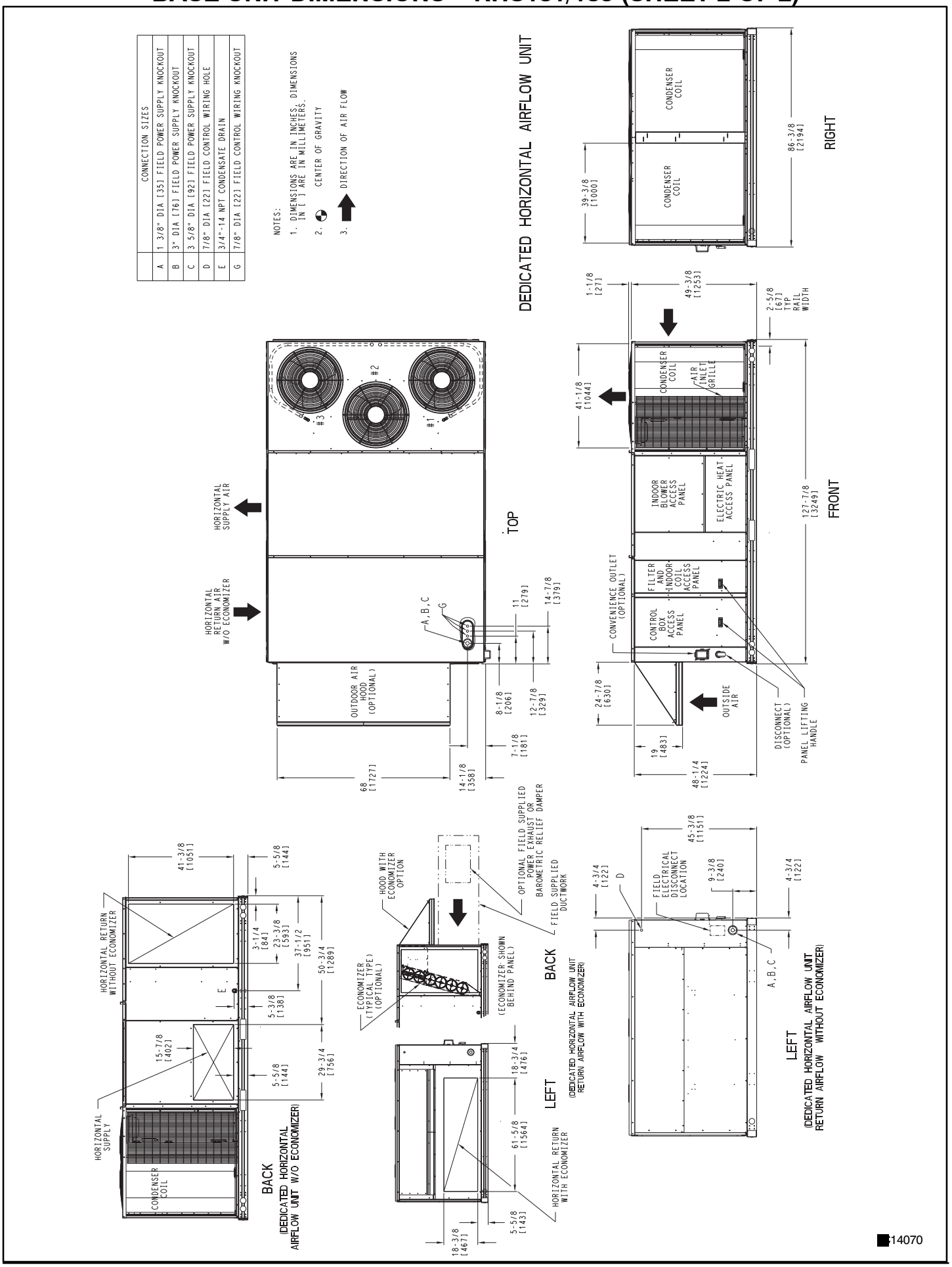

WEIGHT & DIMENSIONS – RHS181/183 (cont.)

UNIT RHS	BASE UNIT WEIGHT		Corner Weight A		Corner Weight B		Corner Weight C		Corner Weight D		Center of Gravity In [mm]		
	LBS	KG	LBS	KG	LBS	KG	LBS	KG	LBS	KG	X	Y	Z
15 Ton	1775	807	479	218	364	166	403	183	530	241	45–1/4 [1149]	55–1/4 [1403]	16–1/2 [419]

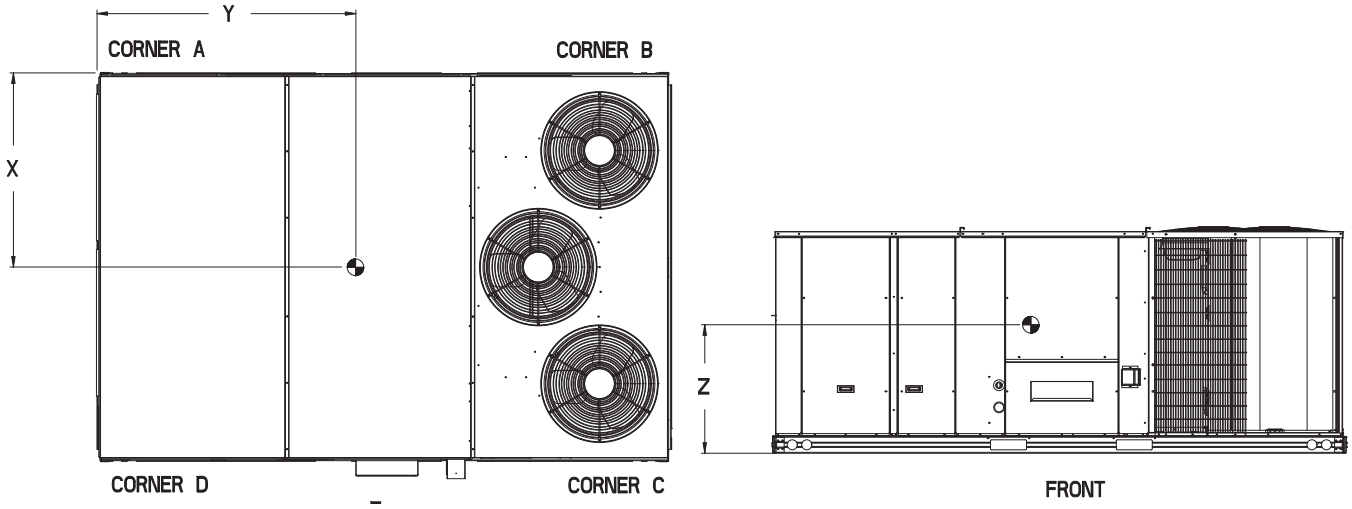

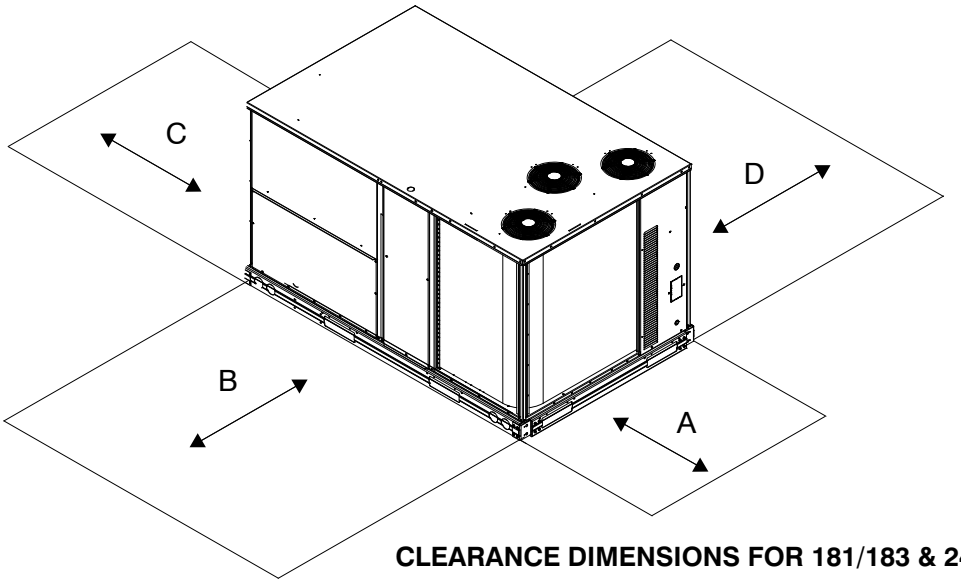

CLEARANCE DIMENSIONS FOR 181/183 & 240/243

LOCATION	DIMENSION	CONDITION
A	36–in (914 mm)	• Recommended clearance for air flow and service
B	42–in (1067 mm)	• Recommended clearance for air flow and service
C	18–in (457 mm)	• No Convenience Outlet • No Economizer • No field installed disconnect on economizer hood side (Factory–installed disconnect installed).
	36–in (914 mm)	• Convenience Outlet installed. • Vertical surface behind servicer is electrically non–conductive (e.g.: wood, fiberglass).
	42–in (1067 mm)	• Convenience Outlet installed. • Vertical surface behind servicer is electrically conductive (e.g.: metal, masonry).
	96–in (2438 mm)	• Economizer and/or Power Exhaust installed. • Check for sources of flue products with 10 feet (3 meters) of economizer fresh air intake.
D	42–in (1067 mm)	• Recommended clearance for service.

NOTE: Unit not designed to have overhead obstruction. Contact Application Engineering for guidance on any application planning overhead obstruction or for vertical clearances.

ROOF CURB DETAILS – RHS181/183

RoofCurb Accessory	A	Unit Size
CRRFCURB045A01	1' 2 " [356]	RHS181/183
CRRFCURB046A01	2' 0" [610]	

NOTES:
1. Roofcurb accessory is shipped disassembled.
2. Dimensions in. [ ] in millimeters.
3. Roofcurb galvanized steel.
4. Attach ductwork to curb (Flanges of duct rest on curb)
5. Service clearance 4' on each side.

⇨ Direction of airflow.

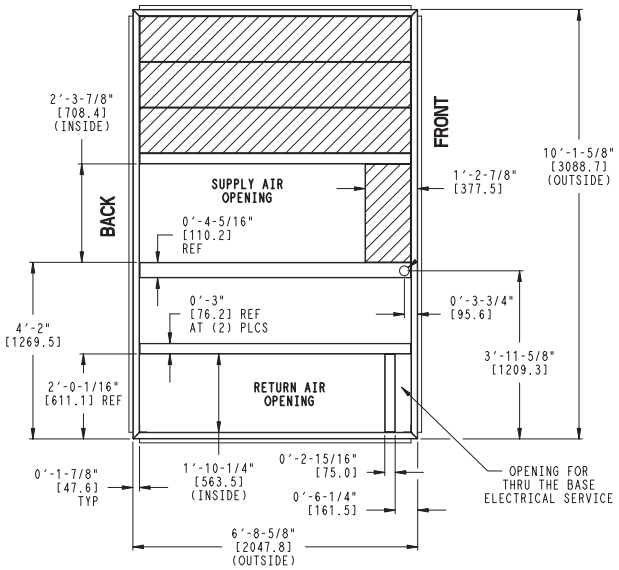

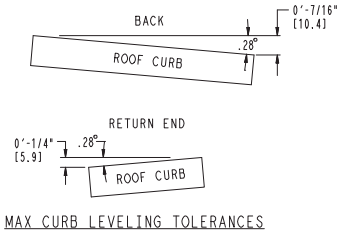

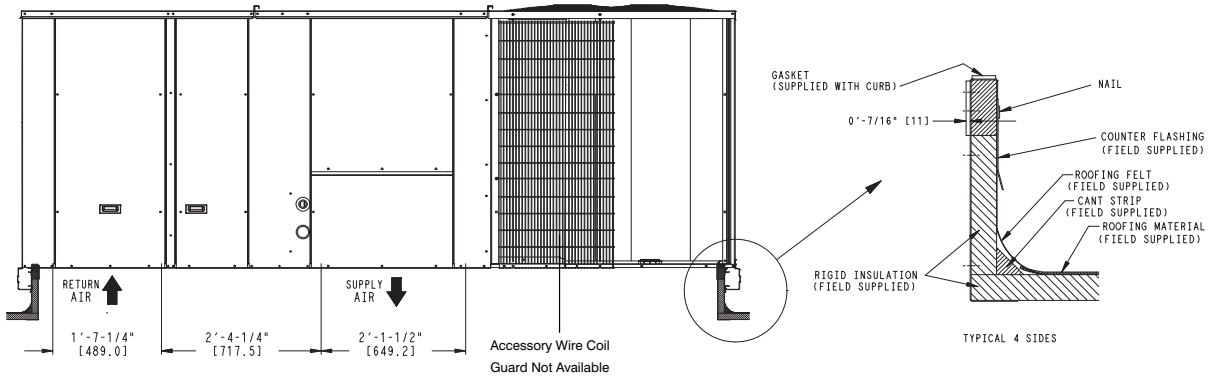

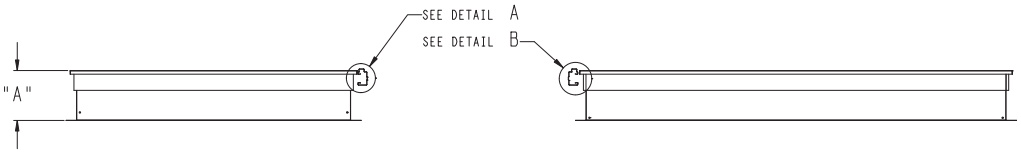

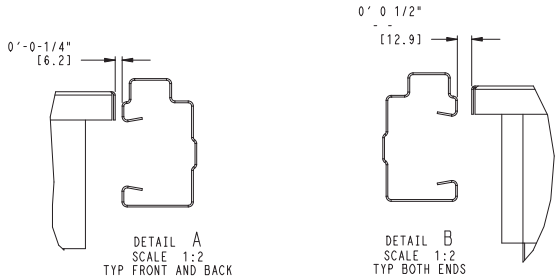

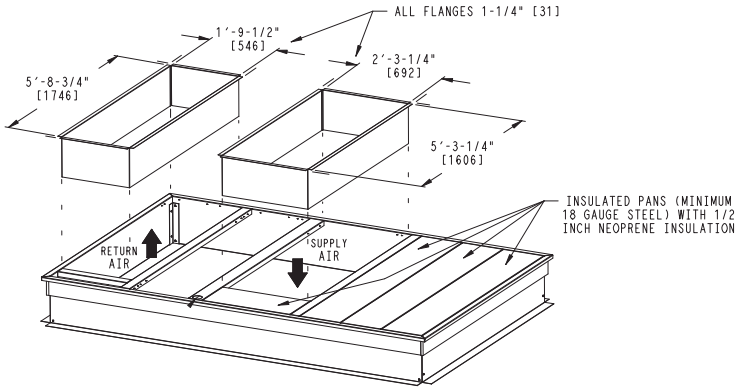

BASE UNIT DIMENSIONS – RHS240/243 (SHEET 1 OF 2)

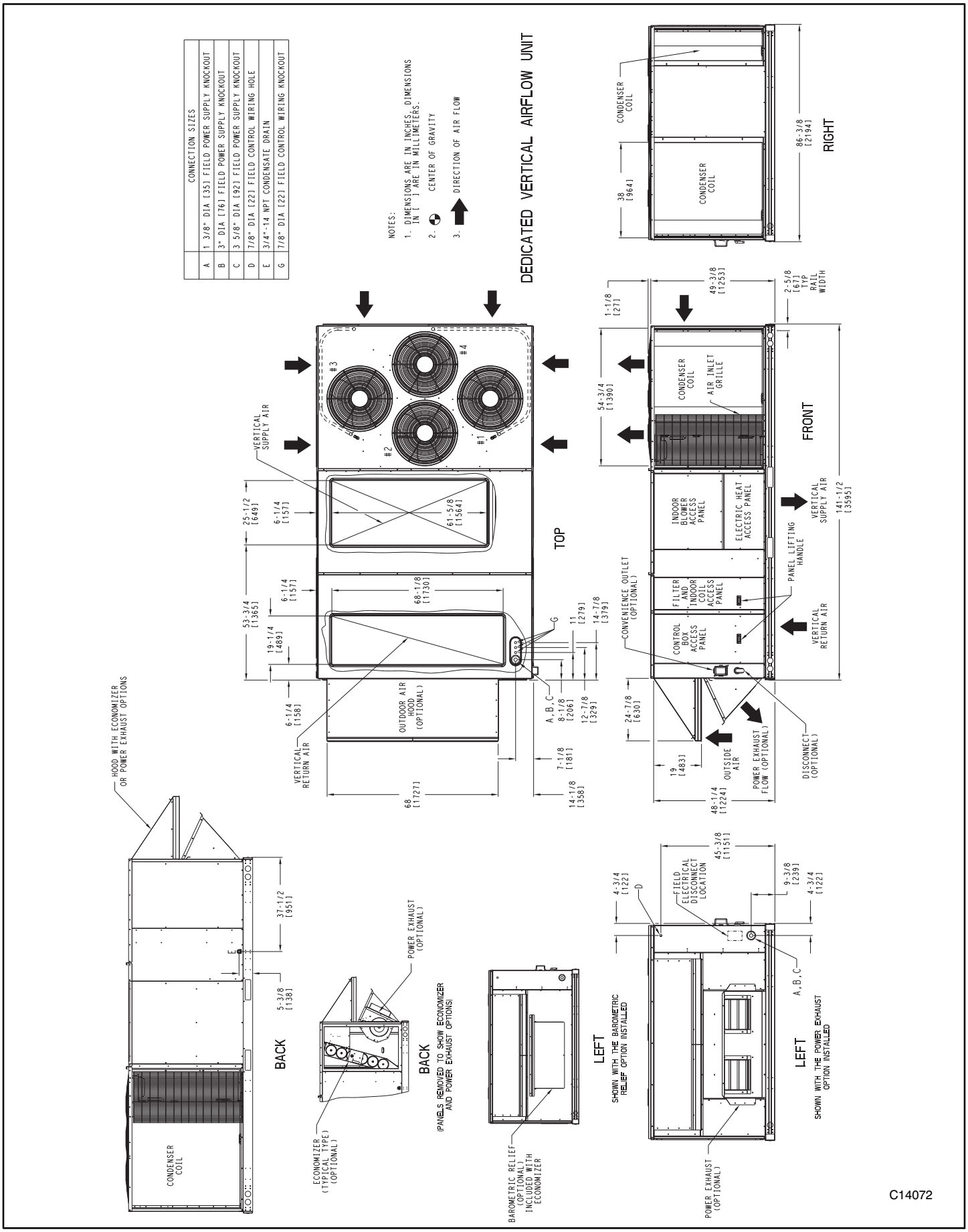

Specifications subject to change without notice.

BASE UNIT DIMENSIONS – RHS240/243 (SHEET 2 OF 2)

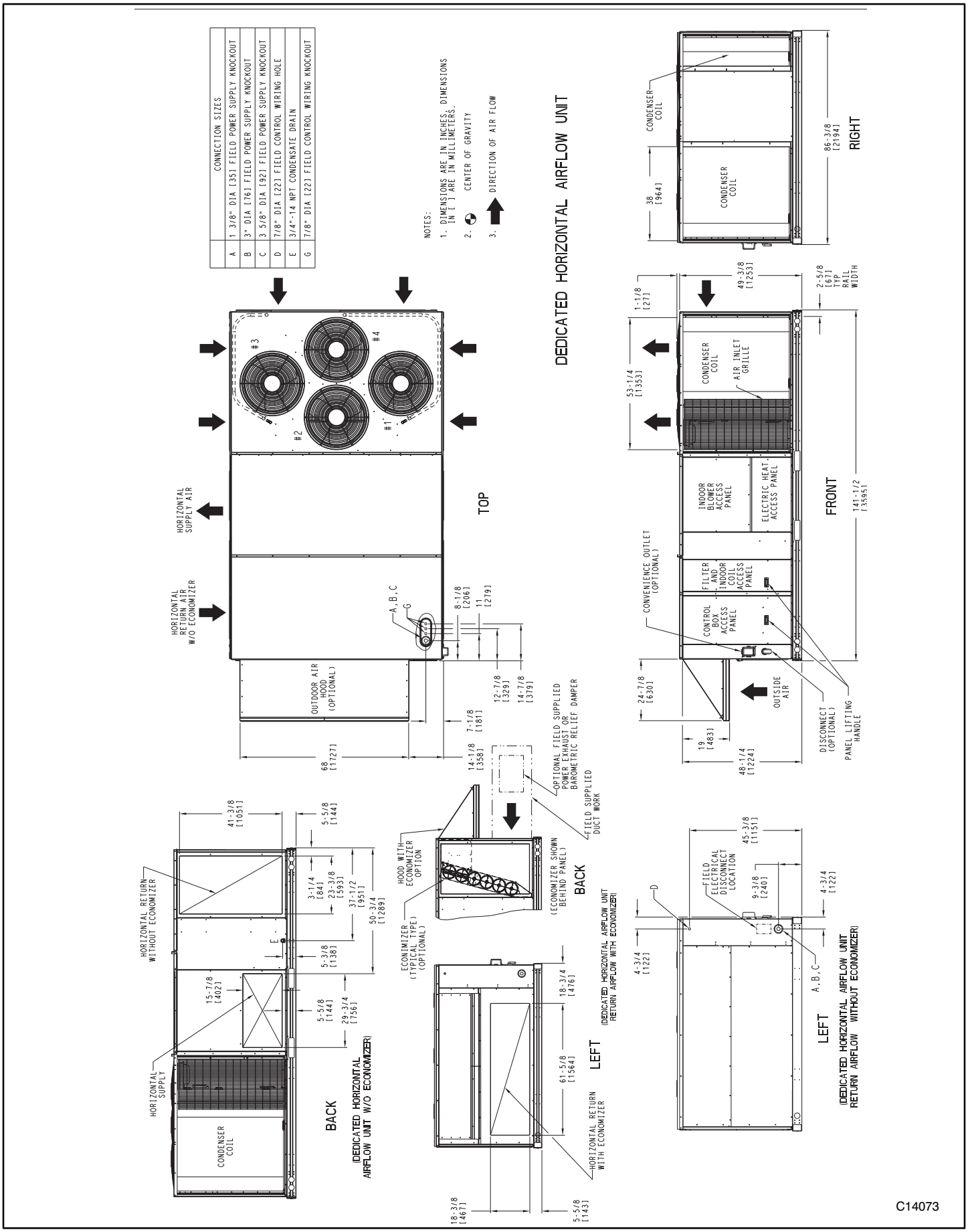

WEIGHT & CLEARANCE DIMENSIONS – RHS240/243 (cont.)

UNIT	Unit Weight		Corner Weight (A)		Corner Weight (B)		Corner Weight (C)		Corner Weight (D)		Center of Gravity In [mm]		
	Lb	Kg	Lb	Kg	Lb	Kg	Lb	Kg	Lb	Kg	X	Y	Z
20 Ton	2100	955	534	243	517	235	516	235	533	242	43-1/8 [1092]	69-1/2 [1765]	16-1/2 [419]

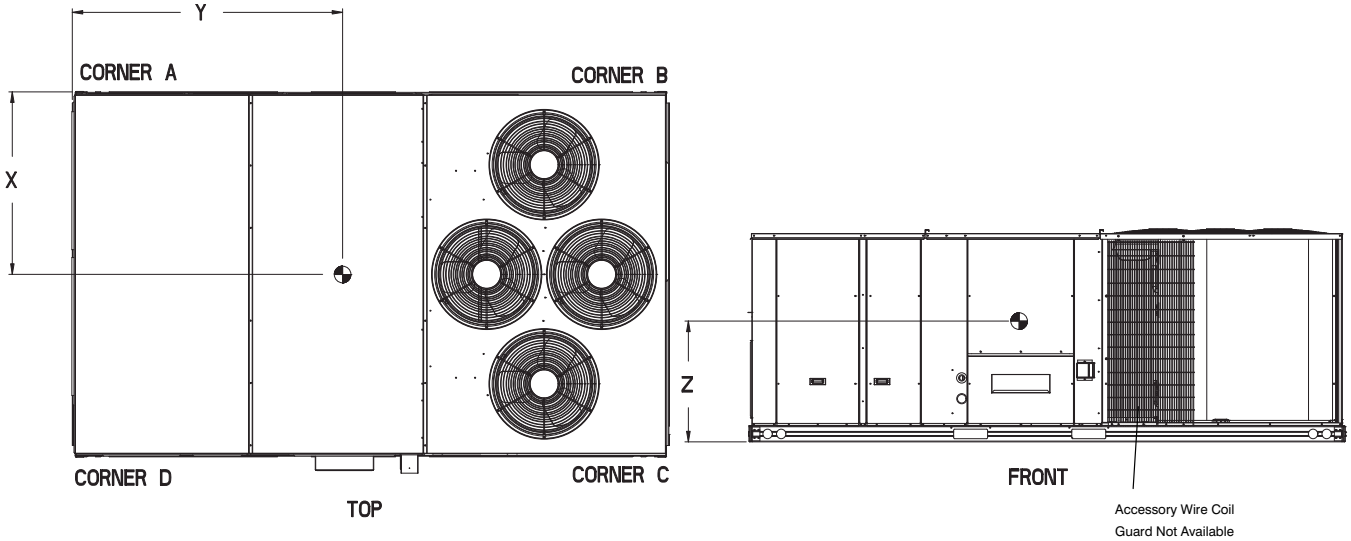

ROOF CURB DETAILS – RHS240/243

RoofCurb Accessory	A	Unit Size
CRRFCURB047A01	1' 2 " [356]	RHS240/243
CRRFCURB048A01	2' 0" [610]	

NOTES:
1. Roofcurb accessory is shipped disassembled.
2. Dimensions in. [ ] in millimeters.
3. Roofcurb galvanized steel.
4. Attach ductwork to curb (Flanges of duct rest on curb)
5. Service clearance 4' on each side.

⇨ Direction of airflow.

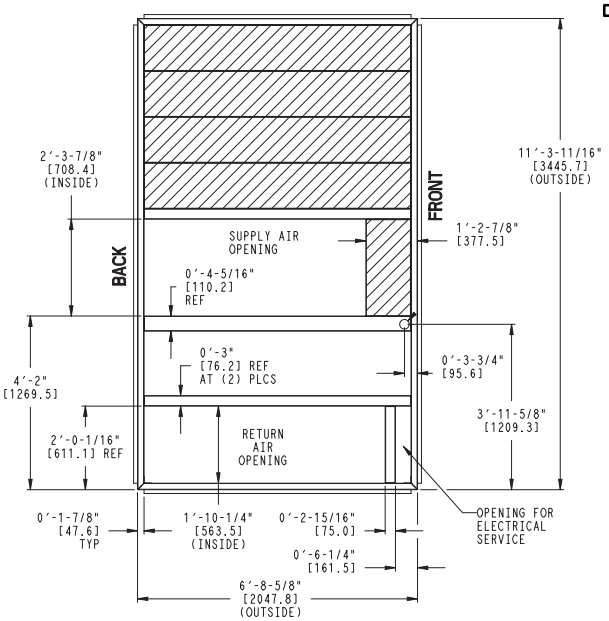

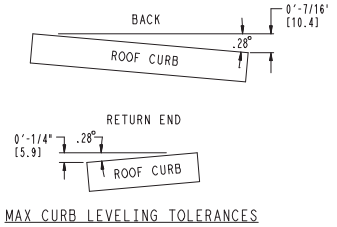

MAX CURB LEVELING TOLERANCES

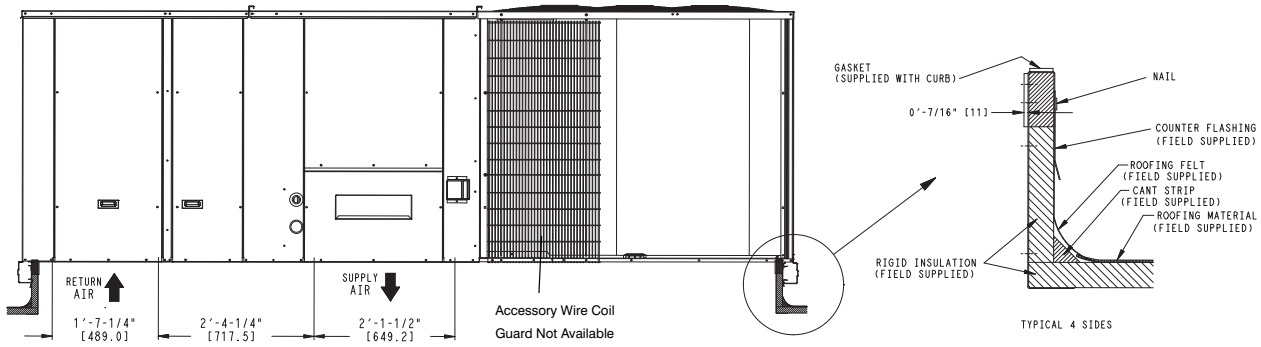

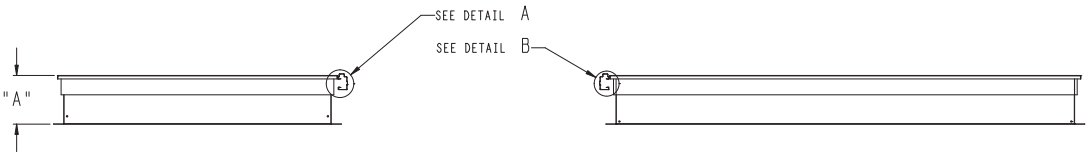

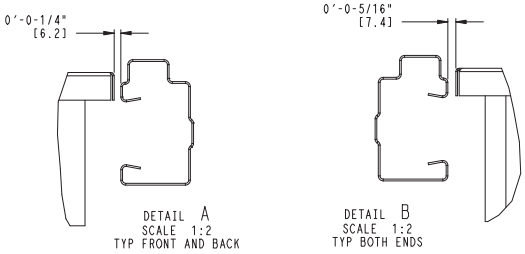

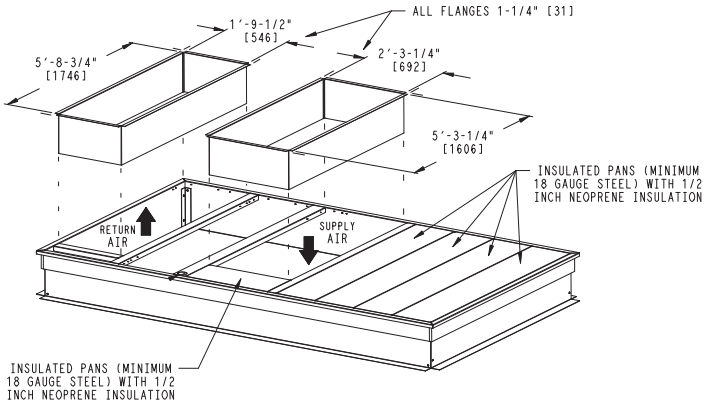

OPTIONS AND ACCESSORIES WEIGHT ADDERS

BASE UNIT WITH OPTIONS AND ACCESSORIES (Weight Adders)	MAX WEIGHT ADD			
	RHS181/183		RHS240/243	
	lb	kg	lb	kg
Power Exhaust	125	57	125	57
Economizer	170	77	170	77
Copper Tube/Fin Evaporator Coil	110	50	135	61
Roof Curb (14 inch)	240	109	240	109
Roof Curb (24 inch)	340	154	340	154
Louvered Hail Guard	60	27	120	54
CO_2 sensor	5	2	5	2
Supply Smoke Detector	5	2	5	2
Fan/Filter Status Switch	2	1	2	1
Non−Fused Disconnect	15	7	15	7
Non−Powered Convenience outlet	5	2	5	2
Enthalpy Sensor	2	1	2	1
Differential Enthalpy Sensor	3	1	3	1
Two Position Motorized Damper	50	23	50	23
Manual Damper	35	16	35	16
4−in Field Filter Track	12	5	12	5
MotorMaster Controller	35	16	35	16
Medium Static Motor/Drive	5	2	6	3
High Static Motor/Drive	11	5	16	7
2−Speed System with VFD	20	9	30	9

NOTE: Where multiple variations are available, the heaviest combination is listed.

APPLICATION DATA

Min operating ambient temp (cooling):

In mechanical cooling mode, your rooftop can safely operate down to an outdoor ambient temperature of 30°F (–1°C). It is possible to provide cooling at lower outdoor ambient temperatures by using less outside air, economizers, and/or accessory low ambient kits.

Max operating ambient temp (cooling):

The maximum operating ambient temperature for cooling mode is 115°F (46°C). While cooling operation above 115°F (46°C) may be possible, it could cause either a reduction in performance, reliability, or a protective action by the unit's internal safety devices.

Min and max airflow (cooling mode):

To maintain safe and reliable operation of your rooftop, operate within the cooling airflow limits. Operating above the max may cause blow–off, undesired airflow noise, or airflow related problems with the rooftop unit. Operating below the min may cause problems with coil freeze–up.

Airflow:

All units are draw–though in cooling mode.

Outdoor air application strategies:

Economizers reduce operating expenses and compressor run time by providing a free source of cooling and a means of ventilation to match application changing needs. In fact, they should be considered for most applications. Also, consider the various economizer control methods and their benefits, as well as sensors required to accomplish your application goals.

Motor limits, break horsepower (BHP):

Due to the internal unit design, air path, and specially designed motors, the full horsepower (maximum continuous BHP) band, as listed in the Physical Data, can be used with the utmost confidence.

Sizing a rooftop

Bigger isn't necessarily better. While an air conditioner needs to have enough capacity to meet the load, it doesn't need excess capacity. In fact, having excess capacity typically results in very poor part load performance and humidity control.

Using higher design temperatures than ASHRAE recommends for your location, adding "safety factors" to the calculated load, and rounding up to the next largest unit, are all signs of oversizing air conditioners. Oversizing can cause short–cycling, and short cycling leads to poor humidity control, reduced efficiency, higher utility bills, drastic indoor temperature swings, excessive noise, and increased wear and tear on the air conditioner.

Rather than oversizing an air conditioner, wise contractors and engineers "right–size" or even slightly undersize air conditioners. Correctly sizing an air conditioner controls humidity better; promotes efficiency; reduces utility bills; extends equipment life, and maintains even, comfortable temperatures.

Low ambient applications

When equipped with an economizer, your rooftop unit can cool your space by bringing in fresh, cool outside air. In fact, when so equipped, accessory low–ambient kit may not be necessary. In low ambient conditions, unless the outdoor air is excessively humid or contaminated, economizer–based "free cooling" is the preferred less costly and energy conscious method.

In low ambient applications where outside air might not be desired (such as contaminated or excessively humid outdoor environments), the rooftop can operate to ambient temperatures down to –20°F (–29°C) using the recommended accessory Motormaster low ambient controller.

Table 7 – COOLING CAPACITIES 15 TONS (2 Stage Cooling)

RHS181/183				AMBIENT TEMPERATURE											
				85			95			105			115		
				EA (db)			EA (db)			EA (db)			EA (db)		
				75	80	85	75	80	85	75	80	85	75	80	85
4500 CFM	EAT (wb)	58	TC	152.7	153.6	161.2	145.9	147.8	155.6	138.8	141.9	149.5	131.2	135.6	143.0
			SHC	135.5	153.6	161.2	132.0	147.8	155.6	128.4	141.9	149.5	124.4	135.6	143.0
		62	TC	164.1	163.9	164.2	156.9	156.7	157.1	149.2	149.0	150.0	141.0	140.8	143.1
			SHC	118.5	139.2	158.6	115.2	135.9	155.1	111.7	132.3	150.0	108.1	128.4	143.1
		67	TC	179.4	179.2	179.0	171.6	171.4	171.1	163.2	162.9	162.7	154.2	154.0	153.6
			SHC	96.7	117.5	138.3	93.5	114.3	135.0	90.0	110.8	131.6	86.5	107.2	127.9
		72	TC	195.8	195.6	195.3	187.2	187.0	186.7	178.0	177.8	177.5	168.2	167.9	167.6
			SHC	74.1	95.4	116.2	71.1	92.1	113.0	67.9	88.8	109.6	64.5	85.2	106.0
		76	TC	–	209.5	209.2	–	200.2	199.9	–	190.2	190.0	–	179.6	179.3
			SHC	–	77.4	98.2	–	74.2	95.0	–	70.9	91.7	–	67.4	88.2
5250 CFM	EAT (wb)	58	TC	157.5	161.1	169.6	150.4	155.2	163.5	143.0	148.9	156.9	135.1	142.0	149.8
			SHC	146.1	161.1	169.6	142.4	155.2	163.5	138.2	148.9	156.9	133.5	142.0	149.8
		62	TC	169.1	168.8	170.2	161.5	161.2	163.7	153.3	153.2	157.1	144.6	144.6	149.9
			SHC	127.1	150.6	170.2	123.7	147.0	163.7	120.1	143.1	157.1	116.4	138.7	149.9
		67	TC	184.7	184.4	184.1	176.3	176.1	175.7	167.5	167.2	166.8	158.0	157.7	157.3
			SHC	102.2	126.0	149.7	98.9	122.6	146.3	95.4	119.1	142.7	91.7	115.4	138.8
		72	TC	201.2	201.0	200.7	192.1	191.9	191.5	182.4	182.2	181.8	172.1	171.8	171.3
			SHC	77.0	100.7	124.5	73.7	97.4	121.2	70.3	94.0	117.8	66.7	90.4	114.1
		76	TC	–	215.0	214.7	–	205.1	204.8	–	194.7	194.3	–	183.5	183.1
			SHC	–	80.3	104.1	–	77.0	100.8	–	73.7	97.4	–	70.1	93.9
6000 CFM	EAT (wb)	58	TC	161.4	167.8	176.7	154.1	161.5	170.2	146.9	154.7	163.1	139.3	147.4	155.5
			SHC	155.5	167.8	176.7	151.8	161.5	170.2	145.6	154.7	163.1	139.3	147.4	155.5
		62	TC	172.9	172.7	176.9	164.9	164.9	170.3	156.4	156.7	163.3	147.4	148.2	155.6
			SHC	135.1	160.8	176.9	131.7	156.8	170.3	128.0	152.3	163.3	124.2	146.4	155.6
		67	TC	188.7	188.3	187.9	180.0	179.6	179.2	170.7	170.4	170.0	160.9	160.5	160.2
			SHC	107.3	133.9	160.4	103.9	130.5	156.8	100.4	126.9	152.9	96.6	123.2	148.7
		72	TC	205.4	205.1	204.7	195.9	195.6	195.1	185.8	185.5	185.0	175.1	174.7	174.2
			SHC	79.1	105.7	132.4	75.8	102.4	129.0	72.3	98.9	125.5	68.7	95.2	121.8
		76	TC	–	219.2	218.9	–	209.0	208.5	–	198.0	197.6	–	186.5	186.0
			SHC	–	82.9	109.6	–	79.7	106.3	–	76.2	102.8	–	72.7	99.2
6750 CFM	EAT (wb)	58	TC	165.1	173.4	182.8	158.0	166.8	175.9	150.9	159.6	168.4	143.5	151.9	160.3
			SHC	163.2	173.4	182.8	158.0	166.8	175.9	150.9	159.6	168.4	143.5	151.9	160.3
		62	TC	176.0	176.2	182.9	167.7	168.2	176.0	158.9	160.0	168.5	149.6	152.0	160.4
			SHC	142.8	169.9	182.9	139.3	165.7	176.0	135.6	160.0	168.5	131.6	152.0	160.4
		67	TC	191.9	191.5	191.1	182.9	182.5	182.1	173.3	172.9	172.7	163.2	162.7	162.8
			SHC	112.2	141.5	170.3	108.7	138.1	166.5	105.1	134.4	162.2	101.3	130.6	157.1
		72	TC	208.8	208.4	207.9	198.9	198.5	198.0	188.5	188.1	187.5	177.4	177.0	176.4
			SHC	81.1	110.5	139.9	77.8	107.1	136.5	74.3	103.6	132.9	70.6	99.9	129.2
		76	TC	–	222.6	222.2	–	212.0	211.5	–	200.7	200.2	–	188.8	188.3
			SHC	–	85.4	114.8	–	82.1	111.5	–	78.7	108.0	–	75.1	104.4
7500 CFM	EAT (wb)	58	TC	168.7	178.2	187.9	161.9	171.2	180.7	154.7	163.7	172.8	147.0	155.6	164.4
			SHC	168.7	178.2	187.9	161.9	171.2	180.7	154.7	163.7	172.8	147.0	155.6	164.4
		62	TC	178.5	179.4	188.1	170.0	171.6	180.8	160.9	163.8	172.9	151.4	155.8	164.5
			SHC	150.2	177.3	188.1	146.6	171.6	180.8	142.6	163.8	172.9	138.3	155.8	164.5
		67	TC	194.5	194.1	193.8	185.3	184.8	184.6	175.5	174.9	175.1	165.0	164.5	165.4
			SHC	116.8	148.8	179.5	113.3	145.3	175.2	109.7	141.7	170.2	105.8	137.8	163.5
		72	TC	211.5	211.1	210.6	201.4	201.0	200.3	190.7	190.2	189.6	179.4	178.8	178.2
			SHC	83.1	115.1	147.2	79.7	111.6	143.7	76.1	108.1	140.1	72.4	104.3	136.3
		76	TC	–	225.4	224.9	–	214.5	213.9	–	202.9	202.3	–	190.8	190.1
			SHC	–	87.8	119.9	–	84.5	116.5	–	81.0	113.0	–	77.4	109.3

LEGEND:

– – Do not operate
Cfm – Cubic feet per minute (supply air)
EAT(db) – Entering air temperature (dry bulb)
EAT(wb) – Entering air temperature (wet bulb)
SHC – Sensible heat capacity
TC – Total capacity

$$h_{lwb} = h_{ewb} - \frac{\text{total capacity (Btuh)}}{4.5 \times \text{cfm}}$$

Where: h_{ewb} = Enthalpy of air entering evaporator coil

Table 8 – COOLING CAPACITIES 20 TONS (2 Stage Cooling)

RHS240/243				AMBIENT TEMPERATURE											
				85 EAT (db)			95 EAT (db)			105 EAT (db)			115 EAT (db)		
				75	80	85	75	80	85	75	80	85	75	80	85
6000 CFM	EAT (wb)	58	TC	211.1	214.4	225.9	201.2	206.2	217.5	190.5	197.3	208.3	179.4	187.7	198.3
			SHC	191.5	214.4	225.9	186.3	206.2	217.5	180.6	197.3	208.3	173.1	187.7	198.3
		62	TC	227.4	227.1	228.8	216.8	216.4	219.2	205.2	204.9	208.6	192.8	192.6	198.5
			SHC	168.0	197.4	222.1	163.1	192.4	215.5	157.8	186.9	208.6	152.3	180.9	198.5
		67	TC	249.2	248.8	248.4	237.7	237.2	236.8	225.1	224.6	224.1	211.5	211.0	210.5
			SHC	137.5	167.2	196.8	132.7	162.4	191.9	127.5	157.2	186.7	122.0	151.7	181.0
		72	TC	272.6	272.1	271.6	259.9	259.5	258.9	246.2	245.7	245.1	231.3	230.8	230.2
			SHC	106.0	136.2	165.9	101.4	131.4	161.1	96.4	126.3	156.0	91.2	120.9	150.6
		76	TC	–	291.8	291.3	–	278.2	277.6	–	263.3	262.7	–	247.4	246.7
			SHC	–	110.8	140.7	–	106.1	136.0	–	101.1	130.9	–	95.8	125.6
7000 CFM	EAT (wb)	58	TC	218.0	225.8	238.1	207.9	217.0	229.0	197.5	207.4	219.0	186.3	196.9	208.1
			SHC	206.7	225.8	238.1	199.7	217.0	229.0	192.4	207.4	219.0	184.6	196.9	208.1
		62	TC	234.3	234.0	238.5	223.0	222.9	229.2	210.8	211.0	219.2	197.6	199.1	208.3
			SHC	180.8	214.0	238.5	175.7	208.4	229.2	170.3	201.5	219.2	164.6	193.2	208.3
		67	TC	256.5	256.0	255.4	244.2	243.7	243.1	230.9	230.4	229.8	216.6	216.0	215.6
			SHC	145.7	179.8	213.7	140.8	174.8	208.6	135.5	169.5	203.0	129.9	163.9	196.9
		72	TC	280.1	279.5	278.9	266.7	266.1	265.4	252.2	251.6	250.9	236.6	236.0	235.2
			SHC	109.9	144.2	178.3	105.1	139.3	173.4	99.9	134.1	168.2	94.4	128.6	162.6
		76	TC	–	299.4	298.7	–	285.0	284.2	–	269.4	268.6	–	252.6	251.7
			SHC	–	115.2	149.4	–	110.4	144.6	–	105.3	139.5	–	99.9	134.0
8000 CFM	EAT (wb)	58	TC	224.7	235.3	248.4	214.6	225.9	238.6	203.6	215.6	227.9	192.8	204.4	216.2
			SHC	218.0	235.3	248.4	211.0	225.9	238.6	203.6	215.6	227.9	192.8	204.4	216.2
		62	TC	239.6	239.8	248.6	227.8	229.0	238.8	215.0	217.3	228.1	201.4	204.7	216.4
			SHC	192.9	228.6	248.6	187.7	220.5	238.8	182.1	212.7	228.1	176.2	204.7	216.4
		67	TC	262.1	261.5	260.9	249.2	248.6	248.1	235.4	234.7	234.5	220.5	219.8	220.1
			SHC	153.4	191.8	229.5	148.4	186.7	224.0	143.0	181.3	217.8	137.3	175.6	209.5
		72	TC	285.9	285.2	284.4	271.9	271.2	270.4	256.9	256.1	255.2	240.7	239.9	239.0
			SHC	113.2	151.7	190.2	108.3	146.8	185.2	103.0	141.5	179.9	97.5	135.9	174.2
		76	TC	–	305.2	304.4	–	290.2	289.3	–	274.0	273.0	–	256.6	255.6
			SHC	–	119.2	157.8	–	114.3	152.9	–	109.1	147.6	–	103.7	142.1
9000 CFM	EAT (wb)	58	TC	230.7	243.3	256.9	220.3	233.4	246.5	209.9	222.5	235.2	198.6	210.7	222.8
			SHC	228.5	243.3	256.9	220.3	233.4	246.5	209.9	222.5	235.2	198.6	210.7	222.8
		62	TC	243.8	245.9	257.1	231.6	234.7	246.7	218.5	222.7	235.4	204.5	210.8	223.0
			SHC	204.4	238.9	257.1	199.0	231.3	246.7	193.2	222.7	235.4	186.8	210.8	223.0
		67	TC	266.5	265.8	265.4	253.2	252.5	252.4	239.0	238.1	239.0	223.6	222.7	224.9
			SHC	160.8	203.3	243.9	155.6	198.2	237.6	150.2	192.6	228.9	144.4	186.7	219.9
		72	TC	290.5	289.7	288.8	276.1	275.3	274.3	260.6	259.7	258.6	243.9	243.0	241.9
			SHC	116.3	159.0	201.6	111.3	154.0	196.5	106.0	148.6	191.2	100.4	142.9	185.4
		76	TC	–	309.8	308.8	–	294.3	293.2	–	277.6	276.5	–	259.8	258.6
			SHC	–	123.0	165.8	–	118.1	160.8	–	112.8	155.5	–	107.3	149.9
10,000 CFM	EAT (wb)	58	TC	236.3	250.2	264.2	226.3	239.7	253.3	215.4	228.3	241.4	203.6	216.0	228.5
			SHC	236.3	250.2	264.2	226.3	239.7	253.3	215.4	228.3	241.4	203.6	216.0	228.5
		62	TC	247.3	251.2	264.4	234.8	239.9	253.5	221.4	228.5	241.6	207.2	216.1	228.7
			SHC	215.3	249.0	264.4	209.6	239.9	253.5	203.4	228.5	241.6	196.2	216.1	228.7
		67	TC	270.1	269.3	269.5	256.5	255.6	256.9	241.8	240.9	243.4	226.1	225.2	229.0
			SHC	167.8	214.4	256.5	162.7	209.1	247.6	157.1	203.4	238.8	151.3	197.1	229.0
		72	TC	294.3	293.4	292.3	279.5	278.5	277.4	263.5	262.5	261.3	246.5	245.4	244.2
			SHC	119.1	165.9	212.7	114.1	160.9	207.5	108.8	155.5	202.0	103.1	149.7	196.1
		76	TC	–	313.5	312.4	–	297.6	296.4	–	280.5	279.2	–	262.3	261.0
			SHC	–	126.6	173.5	–	121.7	168.5	–	116.4	163.1	–	110.8	157.5

LEGEND:

– – Do not operate
Cfm – Cubic feet per minute (supply air)
EAT(db) – Entering air temperature (dry bulb)
EAT(wb) – Entering air temperature (wet bulb)
SHC – Sensible heat capacity
TC – Total capacity

Table 9 – HEATING CAPACITIES 15 TONS

RHS181/183 RETURN AIR (°F db)	CFM (STANDARD AIR)		TEMPERATURE AIR ENTERING OUTDOOR COIL (°F db at 70% RH)								
			–5	0	10	17	30	40	47	50	60
55	4500	Capacity	72.8	80.1	95.8	107.6	132.6	155.3	171.2	175.7	195.4
		Int. Cap.	67.1	73.7	87.9	98.1	116.2	155.3	171.2	175.7	195.4
	6000	Capacity	75.8	83.1	99.3	111.6	137.6	160.5	174.1	178.4	197.5
		Int. Cap.	69.9	76.5	91.1	101.7	120.6	160.5	174.1	178.4	197.5
	7500	Capacity	79.4	86.7	103.2	116.0	142.4	164.0	176.9	181.1	199.6
		Int. Cap.	73.2	79.8	94.7	105.8	124.8	164.0	176.9	181.1	199.6
70	4500	Capacity	65.8	73.0	88.9	100.5	124.7	145.1	163.1	168.7	190.3
		Int. Cap.	60.6	67.2	81.6	91.6	109.2	145.1	163.1	168.7	190.3
	6000	Capacity	68.9	76.4	92.6	104.5	129.6	151.5	169.0	174.0	193.0
		Int. Cap.	63.5	70.3	85.0	95.3	113.6	151.5	169.0	174.0	193.0
	7500	Capacity	72.6	80.2	96.6	108.8	134.5	157.3	173.2	177.4	195.7
		Int. Cap.	66.9	73.8	88.7	99.2	117.9	157.3	173.2	177.4	195.7
80	4500	Capacity	60.3	67.5	83.8	95.4	118.8	139.0	156.5	162.2	186.4
		Int. Cap.	55.5	62.1	76.9	87.0	104.1	139.0	156.5	162.2	186.4
	6000	Capacity	63.3	70.8	87.5	99.4	123.8	144.7	163.0	168.5	189.9
		Int. Cap.	58.4	65.2	80.3	90.6	108.5	144.7	163.0	168.5	189.9
	7500	Capacity	67.0	74.7	91.5	103.6	128.8	149.9	168.5	173.6	192.8
		Int. Cap.	61.7	68.7	84.0	94.5	112.8	149.9	168.5	173.6	192.8

LEGEND

Capacity – Instantaneous Capacity (1000 Btuh) includes indoor fan motor heat @AHRI static conditions

Int. Cap. – Integrated Capacity is Instantaneous Capacity minus the effects of frost on the outdoor coil and the heat required to defrost

RH – Relative Humidity

db – Dry Bulb

Table 10 – HEATING CAPACITIES 20 TONS

RHS240/243 RETURN AIR (°F db)	CFM (STANDARD AIR)		TEMPERATURE AIR ENTERING OUTDOOR COIL (°F db at 70% RH)								
			–5	0	10	17	30	40	47	50	60
55	6000	Capacity	93.4	104.1	125.2	141.7	177.0	206.9	229.0	235.4	261.4
		Int. Cap.	86.1	95.8	114.9	129.2	155.1	206.9	229.0	235.4	261.4
	8000	Capacity	98.8	109.5	131.2	160.8	184.4	214.6	233.4	238.4	264.3
		Int. Cap.	91.0	100.8	120.4	146.6	161.6	214.6	233.4	238.4	264.3
	10000	Capacity	104.8	115.7	137.8	155.0	191.2	221.0	236.8	242.2	267.3
		Int. Cap.	96.65	106.4	126.4	141.4	167.5	221.0	236.8	242.2	267.3
70	6000	Capacity	81.1	92.2	114.9	131.1	165.6	195.1	219.1	226.5	256.2
		Int. Cap.	74.7	84.9	105.5	119.5	145.1	195.1	219.1	226.5	256.2
	8000	Capacity	86.1	97.5	120.3	137.0	173.1	203.3	227.0	233.8	259.2
		Int. Cap.	79.3	89.7	110.4	124.9	151.7	203.3	227.0	233.8	259.2
	10000	Capacity	91.9	103.5	126.4	143.5	179.7	211.8	233.6	239.8	262.9
		Int. Cap.	84.7	95.2	116.0	130.8	157.5	211.8	233.6	239.8	262.9
80	6000	Capacity	72.6	84.0	107.3	124.4	157.7	187.2	210.7	218.5	250.8
		Int. Cap.	66.9	77.3	98.5	113.5	138.2	187.2	210.7	218.5	250.8
	8000	Capacity	77.2	88.9	112.8	129.9	164.8	195.8	219.6	227.2	256.7
		Int. Cap.	71.2	81.8	103.5	118.4	144.4	195.8	219.6	227.2	256.7
	10000	Capacity	82.8	94.7	118.9	136.0	172.0	203.8	227.4	234.5	261.7
		Int. Cap.	76.3	87.1	109.2	124.0	150.7	203.8	227.4	234.5	261.7

LEGEND

Capacity – Instantaneous Capacity (1000 Btuh) includes indoor fan motor heat @AHRI static conditions

Int. Cap. – Integrated Capacity is Instantaneous Capacity minus the effects of frost on the outdoor coil and the heat required to defrost

RH – Relative Humidity

db – Dry Bulb

Table 11 – STATIC PRESSURE ADDERS (Factory Options and/or Accessories)

Economizer – Vertical and Horizontal Duct Configuration

Model Sizes 181 — 243								
CFM	**4500**	**5000**	**5500**	**6000**	**6500**	**7000**	**7500**	**8000**
Vertical & Horizontal	0.047	0.052	0.057	0.062	0.067	0.072	0.077	0.082

Model Sizes 181 — 243									
CFM	**8500**	**9000**	**9500**	**10000**	**10500**	**11000**	**11500**	**12000**	**12500**
Vertical & Horizontal	0.088	0.093	0.098	0.103	0.109	0.114	0.119	0.125	0.131

Electric Heaters – Vertical and Horizontal Duct Configuration

Model Sizes 181 — 243								
CFM	**4500**	**5000**	**5500**	**6000**	**6500**	**7000**	**7500**	**8000**
25 kW Heater	0.010	0.010	0.015	0.020	0.025	0.030	0.035	0.040
50 kW Heater	0.020	0.020	0.030	0.040	0.050	0.060	0.070	0.080
75 kW Heater	0.030	0.040	0.050	0.060	0.070	0.080	0.100	0.120

Model Sizes 181 — 243									
CFM	**8500**	**9000**	**9500**	**10000**	**10500**	**11000**	**11500**	**12000**	**12500**
25 kW Heater	0.045	0.050	0.055	0.060	0.070	0.080	0.090	0.100	0.105
50 kW Heater	0.090	0.100	0.120	0.130	0.150	0.160	0.180	0.200	0.230
75 kW Heater	0.140	0.150	0.180	0.200	0.230	0.250	0.270	0.300	0.330

General fan performance notes:

1. Interpolation is permissible. Do not extrapolate.
2. External static pressure is the static pressure difference between the return duct and the supply duct plus the static pressure caused by any FIOPs or accessories.
3. Tabular data accounts for pressure loss due to clean filters, high gas heat, unit casing, and wet coils. Factory options and accessories may add static pressure losses, as shown in Table 11.
4. The Fan Performance tables offer motor/drive recommendations. In cases when two motor/drive combinations would work, the lower horsepower option is recommended.
5. For information on the electrical properties of motors, please see the Electrical information section of this book.
6. For more information on the performance limits of motors, see the application data section of this book.

FAN PERFORMANCE

Table 12 – RHS181, 15 TON VERTICAL SUPPLY / RETURN

CFM	Available External Static Pressure (in. wg)									
	0.2		0.4		0.6		0.8		1.0	
	RPM	BHP	RPM	BHP	RPM	BHP	RPM	BHP	RPM	BHP
4500	**436**	**0.60**	530	0.90	611	1.22	684	1.57	751	1.94
4900	**456**	**0.71**	546	1.03	625	1.37	695	1.73	760	2.12
5250	**473**	**0.83**	560	1.16	637	1.51	706	1.89	770	2.30
5600	**491**	**0.95**	575	1.30	650	1.67	717	2.07	780	2.48
6000	513	1.11	593	1.48	665	1.87	731	2.28	792	2.71
6400	534	1.29	611	1.68	681	2.09	745	2.52	805	2.97
6750	553	1.46	628	1.87	696	2.29	758	2.74	817	3.20
7100	573	1.65	645	2.07	711	2.51	772	2.98	829	3.46
7500	595	1.88	**665**	**2.33**	729	2.79	788	3.27	**844**	**3.77**

CFM	Available External Static Pressure (in. wg)									
	1.2		1.4		1.6		1.8		2.0	
	RPM	BHP	RPM	BHP	RPM	BHP	RPM	BHP	RPM	BHP
4500	812	2.33	869	2.74	924	3.17	975	3.62	**1024**	**4.08**
4900	821	2.53	877	2.95	931	3.40	981	3.86	**1030**	**4.34**
5250	829	2.72	885	3.16	938	3.61	988	4.09	**1036**	**4.57**
5600	838	2.92	893	3.37	945	3.84	994	4.33	**1042**	**4.83**
6000	849	3.17	903	3.63	954	4.12	1003	4.62	*1050*	*5.14*
6400	861	3.43	914	3.92	964	4.42	**1012**	**4.94**	*1058*	*5.47*
6750	872	3.69	924	4.18	973	4.70	*1021*	*5.23*	*1066*	*5.78*
7100	883	3.95	934	4.47	*983*	*5.00*	*1030*	*5.54*	–––––	–––––
7500	897	4.28	947	4.81	*995*	*5.36*	*1041*	*5.92*	–––––	–––––

Std Static Motor and Drive – 514–680 RPM, Max BHP 2.2	Medium Static Motor and Drive – 679–863 RPM, Max BHP 3.3
High Static Motor and Drive – 826–1009 RPM, Max BHP 4.9	––––– Outside operating range
Boldface – Field Supplied Drive	*ITALIC* – Field Supplied Motor and Drive

Table 13 – RHS183, 15 TON HORIZONTAL SUPPLY / RETURN

CFM	Available External Static Pressure (in. wg)									
	0.2		0.4		0.6		0.8		1.0	
	RPM	BHP	RPM	BHP	RPM	BHP	RPM	BHP	RPM	BHP
4500	**451**	**0.84**	533	1.21	605	1.63	668	2.12	726	2.67
4900	**476**	**1.01**	554	1.40	623	1.84	685	2.34	742	2.89
5250	**498**	**1.18**	573	1.60	640	2.05	701	2.55	756	3.11
5600	520	1.37	593	1.82	658	2.28	717	2.79	771	3.35
6000	546	1.61	616	2.10	679	2.58	736	3.10	789	3.67
6400	572	1.88	640	2.41	700	2.91	756	3.45	808	4.03
6750	595	2.13	661	2.70	720	3.23	774	3.79	825	4.38
7100	619	2.41	683	3.02	**740**	**3.59**	793	4.16	842	4.76
7500	646	2.75	**708**	**3.42**	764	4.02	815	4.62	*863*	*5.23*

CFM	Available External Static Pressure (in. wg)									
	1.2		1.4		1.6		1.8		2.0	
	RPM	BHP	RPM	BHP	RPM	BHP	RPM	BHP	RPM	BHP
4500	778	3.25	826	3.86	871	4.49	*913*	*5.15*	–––––	–––––
4900	794	3.49	842	4.12	887	4.78	–––––	–––––	–––––	–––––
5250	808	3.72	856	4.36	*900*	*5.04*	–––––	–––––	–––––	–––––
5600	822	3.97	870	4.62	–––––	–––––	–––––	–––––	–––––	–––––
6000	839	4.29	*886*	*4.96*	–––––	–––––	–––––	–––––	–––––	–––––
6400	857	4.65	–––––	–––––	–––––	–––––	–––––	–––––	–––––	–––––
6750	*873*	*5.01*	–––––	–––––	–––––	–––––	–––––	–––––	–––––	–––––
7100	–––––	–––––	–––––	–––––	–––––	–––––	–––––	–––––	–––––	–––––
7500	–––––	–––––	–––––	–––––	–––––	–––––	–––––	–––––	–––––	–––––

Standard Static Motor and Drive – 514 – 680 RPM, Max BHP 2.2	Medium Static Motor and Drive – 614 – 780 RPM, Max BHP 3.3
High Static Motor and Drive – 746 – 912 RPM, Max BHP 4.9	––––– Outside operating range
Boldface – Field Supplied Drive	*ITALIC* – Field Supplied Motor and Drive

FAN PERFORMANCE (cont.)

Table 14 – RHS240, 20 TON VERTICAL SUPPLY / RETURN

CFM	Available External Static Pressure (in. wg)									
	0.2		0.4		0.6		0.8		1.0	
	RPM	BHP	RPM	BHP	RPM	BHP	RPM	BHP	RPM	BHP
6000	**506**	**1.12**	**593**	**1.43**	**668**	**1.74**	736	2.07	798	2.40
6500	**533**	**1.36**	**616**	**1.70**	689	2.04	754	2.39	815	2.74
7000	**561**	**1.64**	**640**	**2.01**	710	2.37	774	2.74	833	3.11
7500	**588**	**1.96**	**664**	**2.35**	732	2.74	795	3.13	852	3.53
8000	**617**	**2.32**	689	2.74	755	3.15	816	3.57	872	3.99
8500	**645**	**2.73**	715	3.17	779	3.60	837	4.04	892	4.49
9000	**674**	**3.18**	741	3.64	803	4.10	860	4.57	913	5.04
9500	703	3.67	767	4.16	827	4.65	883	5.14	935	5.64
10000	732	4.22	794	4.74	852	5.25	906	5.77	957	6.29

CFM	Available External Static Pressure (in. wg)									
	1.2		1.4		1.6		1.8		2.0	
	RPM	BHP	RPM	BHP	RPM	BHP	RPM	BHP	RPM	BHP
6000	855	2.75	909	3.11	959	3.47	1008	3.85	1054	4.24
6500	871	3.11	924	3.48	974	3.87	1022	4.26	1067	4.67
7000	888	3.50	940	3.89	989	4.30	1036	4.71	1081	5.13
7500	906	3.94	957	4.35	1005	4.77	1052	5.20	1096	5.64
8000	925	4.42	975	4.85	1022	5.29	1068	5.74	1111	6.20
8500	944	4.94	993	5.40	1040	5.86	1084	6.33	1127	6.81
9000	964	5.51	1012	5.99	1058	6.48	1102	6.97	1144	7.46
9500	984	6.13	1032	6.64	1077	7.14	1120	7.65	1161	8.17
10000	1006	6.81	1052	7.33	1096	7.86	1138	8.40	----	----

Std Static Motor and Drive — 690—863 RPM, Max BHP 4.9	Medium Static Motor and Drive — 835—1021 RPM, Max BHP 6.5
High Static Motor and Drive — 941—1176 RPM, Max BHP 8.7	---- Outside operating range
Boldface — Field Supplied Drive	

Table 15 – RHS243, 20 TON HORIZONTAL SUPPLY / RETURN

CFM	Available External Static Pressure (in. wg)									
	0.2		0.4		0.6		0.8		1.0	
	RPM	BHP	RPM	BHP	RPM	BHP	RPM	BHP	RPM	BHP
6000	**546**	**1.57**	617	2.10	680	2.67	738	3.29	790	3.93
6500	**579**	**1.90**	646	2.46	707	3.07	763	3.71	814	4.39
7000	613	2.28	677	2.87	735	3.51	789	4.19	839	4.89
7500	648	2.71	708	3.34	764	4.01	816	4.72	865	5.46
8000	683	3.20	740	3.86	794	4.57	846	5.30	892	6.08
8500	718	3.76	773	4.45	825	5.18	873	5.95	**919**	**6.75**
9000	754	4.37	814	5.10	856	5.87	903	6.67	947	7.50
9500	790	5.06	840	5.82	887	6.51	933	7.45	976	8.31
10000	826	5.82	874	6.50	920	7.44	965	8.30	----	----

CFM	Available External Static Pressure (in. wg)									
	1.2		1.4		1.6		1.8		2.0	
	RPM	BHP	RPM	BHP	RPM	BHP	RPM	BHP	RPM	BHP
6000	839	4.60	885	5.29	928	6.01	969	6.75	1008	7.51
6500	862	5.09	907	5.82	950	6.57	990	7.34	1028	8.13
7000	886	5.63	930	6.39	972	7.17	1012	7.97	1050	8.70
7500	911	6.22	954	7.01	995	7.83	1035	8.66	----	----
8000	936	6.87	979	7.69	1019	8.54	----	----	----	----
8500	965	7.58	1004	8.44	----	----	----	----	----	----
9000	990	8.36	----	----	----	----	----	----	----	----
9500	----	----	----	----	----	----	----	----	----	----
10000	----	----	----	----	----	----	----	----	----	----

Field Supplied Drive changes with Medium Static Motor required: blower pulley p/n KR51BN615, belt p/n KR29BF052 602—756 RPM	Field Supplied Drive changes with Medium Static Motor required: motor pulley p/n KR11HY186 688—868 RPM
Medium Static Motor and Drive – 835 – 1021 RPM, Max BHP 6.5	Underscore — Field Supplied Drive changes with High Static Motor required: blower pulley p/n KR51BL017
High Static Motor and Drive – 941 – 1176 RPM, Max BHP 8.7	
Boldface — Field Supplied Drive	----Outside operating range

FAN PERFORMANCE (cont.)

Table 16 – PULLEY ADJUSTMENT – Vertical

Unit RHS	Motor/Drive Combo	MOTOR PULLEY TURNS OPEN										
		0.0	0.5	1.0	1.5	2.0	2.5	3.0	3.5	4.0	4.5	5.0
181 – 183	Standard Static	680	663	647	630	614	597	580	564	547	531	514
	Medium Static	863	845	826	808	789	771	753	734	716	697	679
	High Static	1009	991	972	954	936	918	899	881	863	844	826
240 – 243	Standard Static	863	846	828	811	794	777	759	742	725	707	690
	Medium Static	1021	1002	984	965	947	928	909	891	872	854	835
	High Static	1176	1153	1129	1106	1082	1059	1035	1012	988	965	941

NOTE: Do not adjust pulley further than 5 turns open.

– Factory settings

Table 17 – PULLEY ADJUSTMENT – Horizontal

Unit RHS	MOTOR/DRIVE COMBO	MOTOR PULLEY TURNS OPEN										
		0.0	0.5	1.0	1.5	2.0	2.5	3.0	3.5	4.0	4.5	5.0
181 – 183	Standard Static	680	663	647	630	614	597	580	564	547	531	514
	Medium Static	780	763	747	730	714	697	680	664	647	631	614
	High Static	912	895	879	862	846	829	812	796	779	763	746
240 – 243	Standard Static	N/A	N/A	N/A	N/A	N/A	N/A	N/A	N/A	N/A	N/A	N/A
	Medium Static	1021	1002	984	965	947	928	909	891	872	854	835
	High Static	1176	1153	1129	1106	1082	1059	1035	1012	988	965	941

NOTE: Do not adjust pulley further than 5 turns open.

– Factory settings

DAMPER, BAROMETRIC RELIEF, AND PERFORMANCE, 15 to 20 Ton

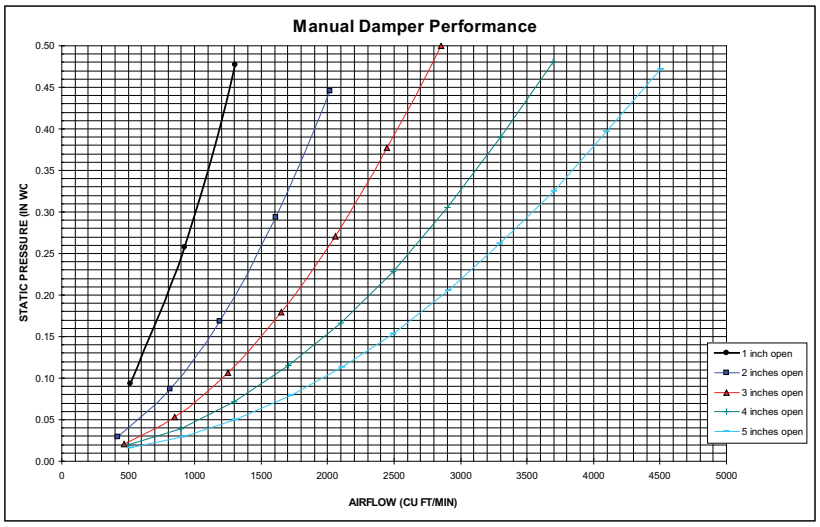

Fig 1 – Manual Damper Performance

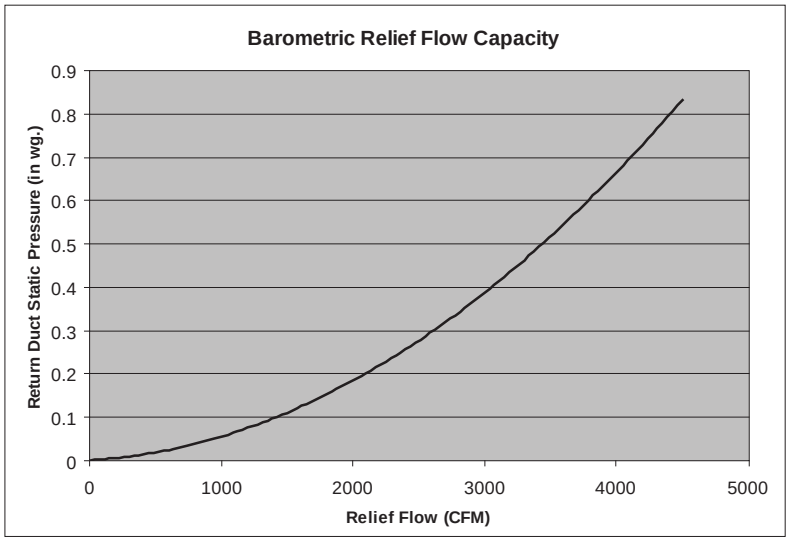

Fig 2 – Barametric Relief Flow Capacity

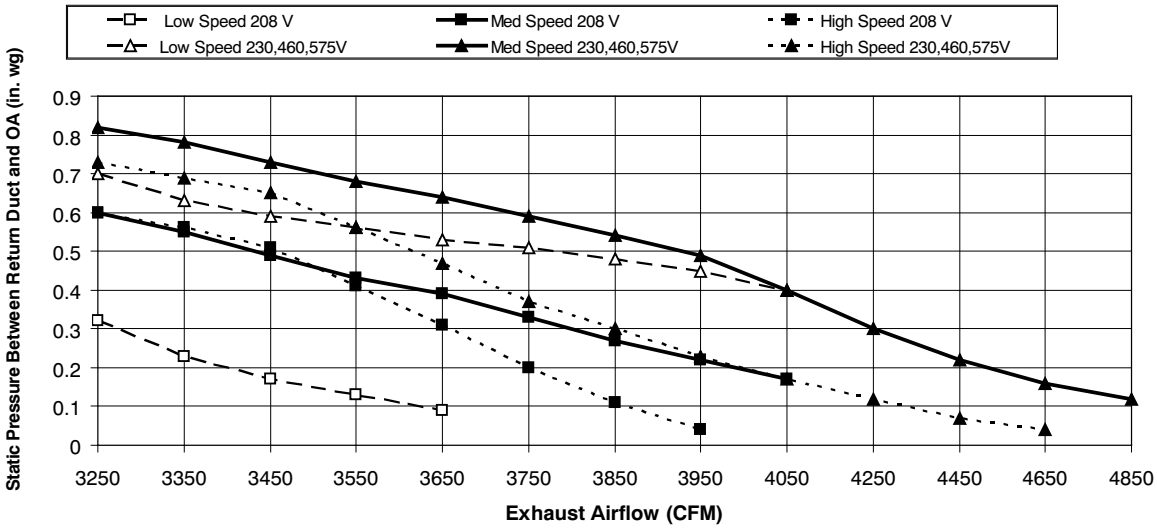

Fig 3 – Power Exhaust Fan Performance

ELECTRICAL INFORMATION

TABLE 18 – RHS181/183 2–STAGE COOLING WITH SINGLE SPEED INDOOR FAN MOTOR

V–Ph–Hz	VOLTAGE RANGE		COMP 1		COMP 2		OFM (ea)		IFM		
	MIN	MAX	RLA	LRA	RLA	LRA	WATTS	FLA	TYPE	EFF at Full Load	FLA
208–3–60	187	253	25.0	164	25.0	164	350	1.5	STD	88.6%	8.4
									MED	87.0%	10.6
									HIGH	82.9%	13.6
230–3–60	187	253	25.0	164	25.0	164	350	1.5	STD	88.6%	8.3
									MED	87.0%	10.6
									HIGH	82.9%	12.7
460–3–60	414	506	12.2	100	12.2	100	277	0.9	STD	88.6%	4.2
									MED	87.0%	5.3
									HIGH	82.9%	6.4
575–3–60	518	633	9.0	78	9.0	78	397	0.6	STD	81.1%	2.8
									MED	81.1%	2.8
									HIGH	83.6%	5.6

TABLE 19 – RHS181/183 2–STAGE COOLING WITH 2–SPEED INDOOR FAN MOTOR

V–Ph–Hz	VOLTAGE RANGE		COMP 1		COMP 2		OFM (ea)		IFM		
	MIN	MAX	RLA	LRA	RLA	LRA	WATTS	FLA	TYPE	EFF at Full Load	FLA
208–3–60	187	253	25.0	164	25.0	164	350	1.5	STD	85.0%	8.6
									MED	81.5%	10.8
									HIGH	83.6%	13.6
230–3–60	187	253	25.0	164	25.0	164	350	1.5	STD	85.0%	7.8
									MED	81.5%	9.8
									HIGH	83.6%	12.7
460–3–60	414	506	12.2	100	12.2	100	277	0.9	STD	85.0%	3.8
									MED	81.5%	4.9
									HIGH	83.6%	6.4
575–3–60	518	633	9.0	78	9.0	78	397	0.6	STD	81.1%	4.5
									MED	81.1%	4.5
									HIGH	83.6%	6.2

TABLE 20 – RHS240/243 2–STAGE COOLING WITH SINGLE SPEED INDOOR FAN MOTOR

V–Ph–Hz	VOLTAGE RANGE		COMP 1		COMP 2		OFM (ea)		IFM		
	MIN	MAX	RLA	LRA	RLA	LRA	WATTS	FLA	TYPE	EFF at Full Load	FLA
208–3–60	187	253	30.1	225	33.3	239	350	1.5	STD**	82.9%	13.6
									MED–High Efficiency	89.5%	17.1
									HIGH–High Efficiency	91.7%	28.5
230–3–60	187	253	30.1	225	33.3	239	350	1.5	STD**	82.9%	12.7
									MED–High Efficiency	89.5%	17.1
									HIGH–High Efficiency	91.7%	28.5
460–3–60	414	506	16.7	114	17.9	125	277	0.9	STD**	82.9%	6.4
									MED–High Efficiency	89.5%	8.6
									HIGH–High Efficiency	91.7%	14.3
575–3–60	518	633	12.2	80	12.8	80	397	0.6	STD**	83.6%	5.6
									MED–High Efficiency	89.5%	7.6
									HIGH–High Efficiency	91.7%	9.5

** STD IFM not available on horizontal 243 model. STD IFM is available on vertical 240 model.

TABLE 21 – RHS240/243 2–STAGE COOLING WITH 2–SPEED INDOOR FAN MOTOR

V–Ph–Hz	VOLTAGE RANGE		COMP 1		COMP 2		OFM (ea)		IFM		
	MIN	MAX	RLA	LRA	RLA	LRA	WATTS	FLA	TYPE	EFF at Full Load	FLA
208–3–60	187	253	30.1	225	33.3	239	350	1.5	STD**	83.6%	13.6
									MED	89.5%	17.1
									HIGH	91.7%	28.5
230–3–60	187	253	30.1	225	33.3	239	350	1.5	STD**	83.6%	12.7
									MED	89.5%	17.1
									HIGH	91.7%	28.5
460–3–60	414	506	16.7	114	17.9	125	277	0.9	STD**	83.6%	6.4
									MED	89.5%	8.6
									HIGH	91.7%	14.3
575–3–60	518	633	12.2	80	12.8	80	397	0.6	STD**	83.6%	6.2
									MED	89.5%	7.6
									HIGH	91.7%	9.5

** STD IFM not available on horizontal 243 model. STD IFM is available on vertical 240 model.

ELECTRICAL DATA FOR UNITS PRODUCED ON OR AFTER JULY 30, 2012

NOTE: Check the serial number of unit to verify production date.

To confirm the date of manufacture, locate the unit nameplate and check the first four digits of the Serial Number. If the number listed in the first 4 digits of the Serial Number is 3112 or higher, the unit was produced on or after July 30, 2012.

SERIAL NUMBER

1	2	3	4	5	6	7	8	9	10
U	1	2	3	1	1	2	3	4	5

Manufacture Location

Year of Manufacture (12 = 2012)

Week of Manufacture (fiscal calendar)

Sequence Number

Legend and Notes for Tables 22 – 25

LEGEND:

BRKR	–	Circuit breaker
CO	–	Convenient outlet
DD Direct drive	–	indoor fan motor
DISC	–	Disconnect
FLA	–	Full load amps
IFM	–	Indoor fan motor
LRA	–	Locked rotor amps
MCA	–	Minimum circuit amps
PE	–	Power exhaust
UNPWR CO	–	Unpowered convenient outlet

NOTES:

1. In compliance with NEC requirements for multimotor and combination load equipment (refer to NEC Articles 430 and 440), the overcurrent protective device for the unit shall be fuse or HACR breaker. Canadian units may be fuse or circuit breaker.
1. **Unbalanced 3-Phase Supply Voltage**
   Never operate a motor where a phase imbalance in supply voltage is greater than 2%. Use the following formula to determine the percentage of voltage imbalance.

$$\text{\% Voltage Imbalance} = 100 \times \frac{\text{max voltage deviation from average voltage}}{\text{average voltage}}$$

Example: Supply voltage is 230-3-60

AB = 224 v
BC = 231 v
AC = 226 v

$$\text{Average Voltage} = \frac{(224 + 231 + 226)}{3} = \frac{681}{3}$$

$$= 227$$

Determine maximum deviation from average voltage.
(AB) 227 – 224 = 3 v
(BC) 231 – 227 = 4 v
(AC) 227 – 226 = 1 v
Maximum deviation is 4 v.
Determine percent of voltage imbalance.

$$\text{\% Voltage Imbalance} = 100 \times \frac{4}{227}$$

$$= 1.76\%$$

This amount of phase imbalance is satisfactory as it is below the maximum allowable 2%.
IMPORTANT: If the supply voltage phase imbalance is more than 2%, contact your local electric utility company immediately.

Unit RHS	NO M. V–Ph–HZ	IFM-TYPE	ELEC. HTR			NO C.O. or UNPWR C.O.							
						NO P.E.				w/ P.E. (pwrd fr/unit)			
			CRHEATER***A00 VERT/HORZ	Nom (kW)	FLA	MCA	MAX FUSE or HACR BRKR	DISC. SIZE FLA	DISC. SIZE LRA	MCA	MAX FUSE or HACR BRKR	DISC. SIZE FLA	DISC. SIZE LRA
181/183	208/230–3–60	STD	NONE	–	–	69.2/69.1	90/90	72/72	409	81.0/80.9	100/100	86/86	429
			279/270A00	18.8/25.0	52.1/60.1	134.3/144.2	150/150	132/141	461/469	146.1/156.0	150/175	146/155	481/489
			280/271A00	37.6/50.0	104.2/120.3	199.4/189.4	200/200	192/211	513/529	211.2/201.2	225/225	206/224	533/549
			281/272A00	56.3/75.0	156.4/180.4	225.6/249.5	250/300	252/280	565/589	237.4/261.3	250/300	266/293	585/609
		MED	NONE	–	–	71.4	90	75	423	83.2	100	88	443
			279/270A00	18.8/25.0	52.1/60.1	136.5/146.5	150/150	135/144	475/483	148.3/158.3	150/175	148/158	495/503
			280/271A00	37.6/50.0	104.2/120.3	201.6/191.7	225/200	195/213	527/543	213.4/203.5	225/225	208/227	547/563
			281/272A00	56.3/75.0	156.4/180.4	227.8/251.8	250/300	255/282	579/603	239.6/263.6	250/300	268/296	599/623
		HIGH	NONE	–	–	74.4/73.5	90/90	78/77	425	86.2/85.3	100/100	92/91	445
			279/270A00	18.8/25.0	52.1/60.1	139.5/148.6	150/150	138/146	477/485	151.3/160.4	175/175	152/160	497/505
			280/271A00	37.6/50.0	104.2/120.3	204.6/193.8	225/225	198/216	529/545	216.4/205.6	225/225	212/229	549/565
			281/272A00	56.3/75.0	156.4/180.4	230.8/253.9	250/300	258/285	581/605	242.6/265.7	250/300	272/298	601/625
	460–3–60	STD	NONE	–	–	34.4	45	36	242	40.6	50	43	254
			282/273A00	25.0	30.1	72.0	80	71	272	78.2	80	78	284
			283/274A00	50.0	60.1	94.5	100	105	302	100.7	110	112	314
			284/275A00	75.0	90.2	124.6	150	140	332	130.8	150	147	344
		MED	NONE	–	–	35.5	45	37	249	41.7	50	44	261
			282/273A00	25.0	30.1	73.1	80	72	279	79.3	80	79	291
			283/274A00	50.0	60.1	95.6	100	106	309	101.8	110	114	321
			284/275A00	75.0	90.2	125.7	150	141	339	131.9	150	148	351
		HIGH	NONE	–	–	36.6	45	39	250	42.8	50	46	262
			282/273A00	25.0	30.1	74.2	80	73	280	80.4	90	80	292
			283/274A00	50.0	60.1	96.7	100	108	310	102.9	110	115	322
			284/275A00	75.0	90.2	126.8	150	142	340	133.0	150	149	352
	575–3–60	STD	NONE	–	–	24.9	30	26	184	29.7	35	32	192
			285/276A00	24.8	23.9	54.7	60	53	208	59.5	60	59	216
			286/277A00	49.6	47.7	84.5	90	81	232	89.3	90	86	240
			287/278A00	74.4	71.6	96.5	100	108	256	101.3	110	114	264
		MED	NONE	–	–	24.9	30	26	184	29.7	35	32	192
			285/276A00	24.8	23.9	54.7	60	53	208	59.5	60	59	216
			286/277A00	49.6	47.7	84.5	90	81	232	89.3	90	86	240
			287/278A00	74.4	71.6	96.5	100	108	256	101.3	110	114	264
		HIGH	NONE	–	–	27.7	30	29	198	32.5	40	35	206
			285/276A00	24.8	23.9	57.5	60	57	222	62.3	70	62	230
			286/277A00	49.6	47.7	87.3	90	84	246	92.1	100	90	254
			287/278A00	74.4	71.6	99.3	110	112	270	104.1	110	117	278

See: “Legend and Notes for Tables 22 – 25” on page 34.

Unit RHS	NO M. V–Ph–HZ	IFMTYPE	ELEC. HTR			NO C.O. or UNPWR C.O.							
						NO P.E.				w/ P.E. (pwrd fr/unit)			
							MAX FUSE or HACR BRKR	DISC. SIZE			MAX FUSE or HACR BRKR	DISC. SIZE	
			CRHEATER***A00 VERT/HORZ	Nom(kW)	FLA	MCA		FLA	LRA	MCA		FLA	LRA
240/243	208/230–3–60	STD**	NONE	–	–	91.3/90.4	100/100	95/94	564	103.1/102.2	125/125	109/108	584
			279/–––A00	18.8/25.0	52.1/60.1	156.5/165.6	175/175	155/164	616/624	168.3/177.4	175/200	169/177	636/644
			280/–––A00	37.6/50.0	104.2/120.3	221.6/210.7	225/225	215/233	668/684	233.4/222.5	250/250	229/246	688/704
			281/–––A00	56.3/75.0	156.4/180.4	247.7/270.8	300/300	275/302	720/744	259.5/282.6	300/300	289/315	740/764
		MED–High Efficiency	NONE	–	–	94.8	125	99	560	106.6	125	113	580
			279/270A00	18.8/25.0	52.1/60.1	160.0/170.0	175/175	159/169	612/620	171.8/181.8	175/200	173/182	632/640
			280/271A00	37.6/50.0	104.2/120.3	225.1/215.1	250/225	219/238	664/680	236.9/226.9	250/250	233/251	684/700
			281/272A00	56.3/75.0	156.4/180.4	251.2/275.2	300/300	279/307	716/740	263.0/287.0	300/300	293/321	736/760
		HIGH–High Efficiency	NONE	–	–	106.2	125	113	639	118.0	150	126	659
			279/270A00	18.8/25.0	52.1/60.1	171.4/181.4	175/200	173/182	691/699	183.2/193.2	200/200	186/195	711/719
			280/271A00	37.6/50.0	104.2/120.3	236.5/226.5	250/250	232/251	743/759	248.3/238.3	250/250	246/265	763/779
			281/272A00	56.3/75.0	156.4/180.4	262.6/286.6	300/300	292/320	795/819	274.4/298.4	300/350	306/334	815/839
	460–3–60	STD**	NONE	–	–	49.1	60	51	291	55.3	60	58	303
			282/–––A00	25.0	30.1	86.7	90	86	321	92.9	100	93	333
			283/–––A00	50.0	60.1	109.2	125	120	351	115.4	125	128	363
			284/–––A00	75.0	90.2	139.3	150	155	381	145.5	150	162	393
		MED–High Efficiency	NONE	–	–	51.3	60	54	289	57.5	70	61	301
			282/273A00	25.0	30.1	88.9	90	88	319	95.1	100	96	331
			283/274A00	50.0	60.1	111.4	125	123	349	117.6	125	130	361
			284/275A00	75.0	90.2	141.5	150	158	379	147.7	175	165	391
		HIGH–High Efficiency	NONE	–	–	57.0	70	60	329	63.2	80	68	341
			282/273A00	25.0	30.1	94.6	100	95	359	100.8	110	102	371
			283/274A00	50.0	60.1	117.1	125	129	389	123.3	150	137	401
			284/275A00	75.0	90.2	147.2	175	164	419	153.4	175	171	431
	575–3–60	STD**	NONE	–	–	36.2	45	38	204	41.0	50	43	212
			285/–––A00	24.8	23.9	66.1	70	65	228	70.9	80	71	236
			286/–––A00	49.6	47.7	95.8	100	93	252	100.6	110	98	260
			287/–––A00	74.4	71.6	107.8	125	120	276	112.6	125	126	284
		MED–High Efficiency	NONE	–	–	38.2	50	40	202	43.0	50	46	210
			285/276A00	24.8	23.9	68.1	70	68	226	72.9	80	73	234
			286/277A00	49.6	47.7	97.8	100	95	250	102.6	110	101	258
			287/278A00	74.4	71.6	109.8	125	123	274	114.6	125	128	282
		HIGH–High Efficiency	NONE	–	–	40.1	50	42	229	44.9	50	48	237
			285/276A00	24.8	23.9	70.0	70	70	253	74.8	80	75	261
			286/277A00	49.6	47.7	99.7	100	97	277	104.5	110	103	285
			287/278A00	74.4	71.6	111.7	125	125	301	116.5	125	130	309

See: “Legend and Notes for Tables 22 – 25” on page 34.

** STD IFM not available on horizontal 243. STD IFM is available on vertical 240

TABLE 23 – RHS181/183

Unit Wire/Fuse or HACR Breaker Sizing Data with Factory Installed 2 Speed Indoor Fan Option

Unit RHS	NO M. V–Ph–HZ	IFM-TYPE	ELEC. HTR			NO C.O. or UNPWR C.O.							
						NO P.E.				w/ P.E. (pwrd fr/unit)			
							MAX FUSE or HACR BRKR	DISC. SIZE			MAX FUSE or HACR BRKR	DISC. SIZE	
			CRHEATER***A00 VERT/HORZ	Nom (kW)	FLA	MCA		FLA	LRA	MCA		FLA	LRA
181/183	208/230–3–60	STD	NONE	–	–	69.4/68.6	90/90	73/72	390	81.2/80.4	100/100	86/85	410
			279/270A00	18.8/25.0	52.1/60.1	134.5/143.7	150/150	132/141	442/450	146.3/155.5	150/175	146/154	462/470
			280/271A00	37.6/50.0	104.2/120.3	199.6/188.9	200/200	192/210	494/510	211.4/200.7	225/225	206/224	514/530
			281/272A00	56.3/75.0	156.4/180.4	225.8/249.0	250/300	252/279	546/570	237.6/260.8	250/300	266/293	566/590
		MED	NONE	–	–	71.6/70.6	90/90	75/74	414	83.4/82.4	100/100	89/88	434
			279/270A00	18.8/25.0	52.1/60.1	136.7/145.7	150/150	135/143	466/474	148.5/157.5	150/175	149/157	486/494
			280/271A00	37.6/50.0	104.2/120.3	201.8/190.9	225/200	195/212	518/534	213.6/202.7	225/225	208/226	538/554
			281/272A00	56.3/75.0	156.4/180.4	228.0/251.0	250/300	255/281	570/594	239.8/262.8	250/300	269/295	590/614
		HIGH	NONE	–	–	74.4/73.5	90/90	78/77	425	86.2/85.3	100/100	92/91	445
			279/270A00	18.8/25.0	52.1/60.1	139.5/148.6	150/150	138/146	477/485	151.3/160.4	175/175	152/160	497/505
			280/271A00	37.6/50.0	104.2/120.3	204.6/193.8	225/225	198/216	529/545	216.4/205.6	225/225	212/229	549/565
			281/272A00	56.3/75.0	156.4/180.4	230.8/253.9	250/300	258/285	581/605	242.6/265.7	250/300	272/298	601/625
	460–3–60	STD	NONE	–	–	34.0	45	36	233	40.2	50	43	245
			282/273A00	25.0	30.1	71.6	80	70	263	77.8	80	77	275
			283/274A00	50.0	60.1	94.1	100	105	293	100.3	110	112	305
			284/275A00	75.0	90.2	124.2	150	139	323	130.4	150	146	335
		MED	NONE	–	–	35.1	45	37	245	41.3	50	44	257
			282/273A00	25.0	30.1	72.7	80	71	275	78.9	80	79	287
			283/274A00	50.0	60.1	95.2	100	106	305	101.4	110	113	317
			284/275A00	75.0	90.2	125.3	150	141	335	131.5	150	148	347
		HIGH	NONE	–	–	36.6	45	39	250	42.8	50	46	262
			282/273A00	25.0	30.1	74.2	80	73	280	80.4	90	80	292
			283/274A00	50.0	60.1	96.7	100	108	310	102.9	110	115	322
			284/275A00	75.0	90.2	126.8	150	142	340	133.0	150	149	352
	575–3–60	STD	NONE	–	–	26.6	30	28	184	31.4	40	33	192
			285/276A00	24.8	23.9	56.4	60	55	208	61.2	70	61	216
			286/277A00	49.6	47.7	86.2	90	83	232	91.0	100	88	240
			287/278A00	74.4	71.6	98.2	110	110	256	103.0	110	116	264
		MED	NONE	–	–	26.6	30	28	184	31.4	40	33	192
			285/276A00	24.8	23.9	56.4	60	55	208	61.2	70	61	216
			286/277A00	49.6	47.7	86.2	90	83	232	91.0	100	88	240
			287/278A00	74.4	71.6	98.2	110	110	256	103.0	110	116	264
		HIGH	NONE	–	–	28.3	35	30	198	33.1	40	35	206
			285/276A00	24.8	23.9	58.1	60	57	222	62.9	70	63	230
			286/277A00	49.6	47.7	87.9	90	85	246	92.7	100	90	254
			287/278A00	74.4	71.6	99.9	110	112	270	104.7	110	118	278

See: “Legend and Notes for Tables 22 – 25” on page 34.

Unit Wire/Fuse or HACR Breaker Sizing Data (cont.) with Factory Installed 2 Speed Indoor Fan Option

Unit RHS	NO M. V–Ph–HZ	IFM-TYPE	ELEC. HTR CRHEATER***A00 VERT/HORZ	ELEC. HTR Nom (kW)	ELEC. HTR FLA	NO C.O. or UNPWR C.O. NO P.E. MCA	NO P.E. MAX FUSE or HACR BRKR	NO P.E. DISC. SIZE FLA	NO P.E. DISC. SIZE LRA	w/ P.E. (pwrd fr/unit) MCA	w/ P.E. MAX FUSE or HACR BRKR	w/ P.E. DISC. SIZE FLA	w/ P.E. DISC. SIZE LRA
240/243	208/230–3–60	STD**	NONE	–	–	91.3/90.4	100/100	95/94	564	103.1/102.2	125/125	109/108	584
			279/–––A00	18.8/25.0	52.1/60.1	156.5/165.6	175/175	155/164	616/624	168.3/177.4	175/200	169/177	636/644
			280/–––A00	37.6/50.0	104.2/120.3	221.6/210.7	225/225	215/233	668/684	233.4/222.5	250/250	229/246	688/704
			281/–––A00	56.3/75.0	156.4/180.4	247.7/270.8	300/300	275/302	720/744	259.5/282.6	300/300	289/315	740/764
		MED	NONE	–	–	94.8	125	99	560	106.6	125	113	580
			279/270A00	18.8/25.0	52.1/60.1	160.0/170.0	175/175	159/169	612/620	171.8/181.8	175/200	173/182	632/640
			280/271A00	37.6/50.0	104.2/120.3	225.1/215.1	250/225	219/238	664/680	236.9/226.9	250/250	233/251	684/700
			281/273A00	56.3/75.0	156.4/180.4	251.2/275.2	300/300	279/307	716/740	263.0/287.0	300/300	293/321	736/760
		HIGH	NONE	–	–	106.2	125	113	639	118.0	150	126	659
			279/270A00	18.8/25.0	52.1/60.1	171.4/181.4	175/200	173/182	691/699	183.2/193.2	200/200	186/195	711/719
			280/271A00	37.6/50.0	104.2/120.3	236.5/226.5	250/250	232/251	743/759	248.3/238.3	250/250	246/265	763/779
			281/272A00	56.3/75.0	156.4/180.4	262.6/286.6	300/300	292/320	795/819	274.4/298.4	300/350	306/334	815/839
	460–3–60	STD**	NONE	–	–	49.1	60	51	291	55.3	60	58	303
			282/–––A00	25.0	30.1	86.7	90	86	321	92.9	100	93	333
			283/–––A00	50.0	60.1	109.2	125	120	351	115.4	125	128	363
			284/–––A00	75.0	90.2	139.3	150	155	381	145.5	150	162	393
		MED	NONE	–	–	51.3	60	54	289	57.5	70	61	301
			282/273A00	25.0	30.1	88.9	90	88	319	95.1	100	96	331
			283/274A00	50.0	60.1	111.4	125	123	349	117.6	125	130	361
			284/275A00	75.0	90.2	141.5	150	158	379	147.7	175	165	391
		HIGH	NONE	–	–	57.0	70	60	329	63.2	80	68	341
			282/273A00	25.0	30.1	94.6	100	95	359	100.8	110	102	371
			283/274A00	50.0	60.1	117.1	125	129	389	123.3	150	137	401
			284/275A00	75.0	90.2	147.2	175	164	419	153.4	175	171	431
	575–3–60	STD**	NONE	–	–	36.8	45	39	204	41.6	50	44	212
			285/–––A00	24.8	23.9	66.7	70	66	228	71.5	80	72	236
			286/–––A00	49.6	47.7	96.4	100	93	252	101.2	110	99	260
			287/–––A00	74.4	71.6	108.4	125	121	276	113.2	125	127	284
		MED	NONE	–	–	38.2	50	40	202	43.0	50	46	210
			285/276A00	24.8	23.9	68.1	70	68	226	72.9	80	73	234
			286/277A00	49.6	47.7	97.8	100	95	250	102.6	110	101	258
			287/278A00	74.4	71.6	109.8	125	123	274	114.6	125	128	282
		HIGH	NONE	–	–	40.1	50	42	229	44.9	50	48	237
			285/276A00	24.8	23.9	70.0	70	70	253	74.8	80	75	261
			286/277A00	49.6	47.7	99.7	100	97	277	104.5	110	103	285
			287/278A00	74.4	71.6	111.7	125	125	301	116.5	125	130	309

See: “Legend and Notes for Tables 22 – 25” on page 34.

** STD IFM not available on horizontal 243. STD IFM is available on vertical 240

ELECTRICAL DATA FOR UNITS PRODUCED PRIOR TO JULY 30, 2012

NOTE: Check the serial number of unit to verify production date.

SERIAL NUMBER

1	2	3	4	5	6	7	8	9	10
U	1	2	3	1	1	2	3	4	5

Manufacture Location

Year of Manufacture (12 = 2012)

Week of Manufacture (fiscal calendar)

Sequence Number

Unit RHS	NO M. V–Ph–HZ	IFM-TYPE	ELEC. HTR			NO C.O. or UNPWR C.O.							
						NO P.E.				w/ P.E. (pwrd fr/unit)			
			CRHEATER***A00 VERT/HORZ	Nominal (kW)	FLA	MCA	MAX FUSE or HACR BRKR	DISC. SIZE FLA	DISC. SIZE LRA	MCA	MAX FUSE or HACR BRKR	DISC. SIZE FLA	DISC. SIZE LRA
181/183	208/230–3–60	STD	NONE	–	–	68.3	90.0	71	393	80.1	100.0	85	413
			279/270A00	18.8/25.0	52.1/60.1	133.4/143.4	150/150	131/140	445/453	145.2/155.2	150/175	145/154	465/473
			280/271A00	37.6/50.0	104.2/120.3	198.5/188.6	200/200	191/210	497/513	210.3/200.4	225/225	205/223	517/533
			281/272A00	56.3/75.0	156.4/180.4	224.7/248.7	250/300	251/279	549/573	236.5/260.5	250/300	265/292	569/593
		MED	NONE	–	–	71.0	90.0	74	410	82.8	100.0	88	430
			279/270A00	18.8/25.0	52.1/60.1	136.1/146.1	150/150	134/144	462/470	147.9/157.9	150/175	148/157	482/490
			280/271A00	37.6/50.0	104.2/120.3	201.2/191.3	225/200	194/213	514/530	213.0/203.1	225/225	208/226	534/550
			281/272A00	56.3/75.0	156.4/180.4	227.4/251.4	250/300	254/282	566/590	239.2/263.2	250/300	268/295	586/610
		HIGH	NONE	–	–	75.8	100.0	80	419	87.6	100.0	93	439
			279/270A00	18.8/25.0	52.1/60.1	140.9/150.9	150/175	140/149	471/479	152.7/162.7	175/175	153/163	491/499
			280/271A00	37.6/50.0	104.2/120.3	206.0/196.1	225/225	200/218	523/539	217.8/207.9	225/225	213/232	543/559
			281/272A00	56.3/75.0	156.4/180.4	232.2/256.2	250/300	260/287	575/599	244.0/268.0	300/300	273/301	595/619
	460–3–60	STD	NONE	–	–	33.6	45.0	35	234	39.8	50.0	42	246
			282/273A00	25.0	30.1	71.2	80.0	70	264	77.4	80.0	77	276
			283/274A00	50.0	60.1	93.7	100.0	104	294	99.9	110.0	111	306
			284/275A00	75.0	90.2	123.8	150	139	324	130.0	150	146	336
		MED	NONE	–	–	35.0	45.0	37	243	41.2	50.0	44	255
			282/273A00	25.0	30.1	72.6	80.0	71	273	78.8	80.0	78	285
			283/274A00	50.0	60.1	95.1	100.0	106	303	101.3	110.0	113	315
			284/275A00	75.0	90.2	125.2	150	140	333	131.4	150	148	345
		HIGH	NONE	–	–	37.6	45.0	40	247	43.8	50.0	47	259
			282/273A00	25.0	30.1	75.2	80.0	74	277	81.4	90.0	81	289
			283/274A00	50.0	60.1	97.7	110.0	109	307	103.9	110.0	116	319
			284/275A00	75.0	90.2	127.8	150	143	337	134.0	150	151	349
	575–3–60	STD	NONE	–	–	24.9	30.0	26	184	29.7	35.0	32	192
			285/276A00	24.8	23.9	54.7	60.0	53	208	59.5	60.0	59	216
			286/277A00	49.6	47.7	84.5	90.0	81	232	89.3	90.0	86	240
			287/278A00	74.4	71.6	96.5	100	108	256	101.3	110	114	264
		MED	NONE	–	–	24.9	30.0	26	184	29.7	35.0	32	192
			285/276A00	24.8	23.9	54.7	60.0	53	208	59.5	60.0	59	216
			286/277A00	49.6	47.7	84.5	90.0	81	232	89.3	90.0	86	240
			287/278A00	74.4	71.6	96.5	100	108	256	101.3	110	114	264
		HIGH	NONE	–	–	27.7	30.0	29	198	32.5	40.0	35	206
			285/276A00	24.8	23.9	57.5	60.0	57	222	62.3	70.0	62	230
			286/277A00	49.6	47.7	87.3	90.0	84	246	92.1	100.0	90	254
			287/278A00	74.4	71.6	99.3	110	112	270	104.1	110	117	278

See: “Legend and Notes for Tables 22 – 25” on page 34.

Unit RHS	NO M. V–Ph–HZ	IFM-TYPE	ELEC. HTR CRHEATER***A00 VERT/HORZ	ELEC. HTR Nominal(kW)	ELEC. HTR FLA	NO C.O. or UNPWR C.O. NO P.E. MCA	NO P.E. MAX FUSE or HACR BRKR	NO P.E. DISC. SIZE FLA	NO P.E. DISC. SIZE LRA	w/ P.E. (pwrd fr/unit) MCA	w/ P.E. MAX FUSE or HACR BRKR	w/ P.E. DISC. SIZE FLA	w/ P.E. DISC. SIZE LRA
240/243	208/230–3–60	STD	NONE	–	–	92.7	125.0	97	558	104.5	125.0	111	578
			279/270A00	18.8/25.0	52.1/60.1	157.9/167.9	175/175	157/166	610/618	169.7/179.7	175/200	171/180	630/638
			280/271A00	37.6/50.0	104.2/120.3	223.0/213.0	225/225	217/235	662/678	234.8/224.8	250/250	230/249	682/698
			281/272A00	56.3/75.0	156.4/180.4	249.1/273.1	300/300	277/305	714/738	260.9/284.9	300/300	290/318	734/758
		MED	NONE	–	–	98.1	125	103	568	109.9	125	117	588
			279/270A00	18.8/25.0	52.1/60.1	163.3/173.3	175/175	163/172	620/628	175.1/185.1	200/200	177/186	640/648
			280/271A00	37.6/50.0	104.2/120.3	228.4/218.4	250/250	223/242	672/688	240.2/230.2	250/250	237/255	692/708
			281/272A00	56.3/75.0	156.4/180.4	254.5/278.5	300/300	283/311	724/748	266.3/290.3	300/300	297/324	744/768
		HIGH	NONE	–	–	110.8	125	118	642	122.6	150	131	662
			279/270A00	18.8/25.0	52.1/60.1	176.0/186.0	200/200	178/187	694/702	187.8/197.8	200/200	191/201	714/722
			280/271A00	37.6/50.0	104.2/120.3	241.1/231.1	250/250	238/256	746/762	252.9/242.9	300/300	251/270	766/782
			281/272A00	56.3/75.0	156.4/180.4	267.2/291.2	300/300	298/325	798/822	279.0/303.0	300/350	311/339	818/842
	460–3–60	STD	NONE	–	–	50.1	60.0	52	288	56.3	70.0	60	300
			282/273A00	25.0	30.1	87.7	90	87	318	93.9	100	94	330
			283/274A00	50.0	60.1	110.2	125	122	348	116.4	125	129	360
			284/275A00	75.0	90.2	140.3	150	156	378	146.5	175	163	390
		MED	NONE	–	–	52.9	60	56	293	59.1	70	63	305
			282/273A00	25.0	30.1	90.5	100	90	323	96.7	100	97	335
			283/274A00	50.0	60.1	113.0	125	125	353	119.2	125	132	365
			284/275A00	75.0	90.2	143.1	150	159	383	149.3	175	167	395
		HIGH	NONE	–	–	58.9	70	63	330	65.1	80	70	342
			282/273A00	25.0	30.1	96.5	100	97	360	102.7	110	104	372
			283/274A00	50.0	60.1	119.0	125	132	390	125.2	150	139	402
			284/275A00	75.0	90.2	149.1	175	166	420	155.3	175	173	432
	575–3–60	STD	NONE	–	–	36.2	45.0	38	204	41.0	50.0	43	212
			285/276A00	24.8	23.9	66.1	70	65	228	70.9	80	71	236
			286/277A00	49.6	47.7	95.8	100	93	252	100.6	110	98	260
			287/278A00	74.4	71.6	107.8	125	120	276	112.6	125	126	284
		MED	NONE	–	–	39.6	50	42	202	44.4	50	47	210
			285/276A00	24.8	23.9	69.5	70	69	226	74.3	80	75	234
			286/277A00	49.6	47.7	99.2	100	97	250	104.0	110	102	258
			287/278A00	74.4	71.6	111.2	125	124	274	116.0	125	130	282
		HIGH	NONE	–	–	40.1	50	42	229	44.9	50	48	237
			285/276A00	24.8	23.9	70.0	70	70	253	74.8	80	75	261
			286/277A00	49.6	47.7	99.7	100	97	277	104.5	110	103	285
			287/278A00	74.4	71.6	111.7	125	125	301	116.5	125	130	309

See: “Legend and Notes for Tables 22 — 25” on page 34.

TABLE 25 – RHS181/183

Unit Wire/Fuse or HACR Breaker Sizing Data with Factory Installed 2 Speed Indoor Fan Option

Unit RHS	NO M. V–Ph–HZ	IFM-TYPE	ELEC. HTR CRHEATER ***A00 VERT/HORZ	ELEC. HTR Nominal (kW)	ELEC. HTR FLA	NO C.O. or UNPWR C.O. NO P.E. MCA	NO P.E. MAX FUSE or HACR BRKR	NO P.E. DISC. SIZE FLA	NO P.E. DISC. SIZE LRA	w/ P.E. (pwrd fr/unit) MCA	w/ P.E. MAX FUSE or HACR BRKR	w/ P.E. DISC. SIZE FLA	w/ P.E. DISC. SIZE LRA
181/183	208/230–3–60	STD	NONE	–	–	69.4/68.6	90/90	73/72	390	81.2/80.4	100/100	86/85	410
			279/270A00	18.8/25.0	52.1/60.1	134.5/143.7	150/150	132/141	442/450	146.3/155.5	150/175	146/154	462/470
			280/271A00	37.6/50.0	104.2/120.3	199.6/188.9	200/200	192/210	494/510	211.4/200.7	225/225	206/224	514/530
			281/272A00	56.3/75.0	156.4/180.4	225.8/249.0	250/300	252/279	546/570	237.6/260.8	250/300	266/293	566/590
		MED	NONE	–	–	71.6/70.6	90/90	75/74	414	83.4/82.4	100/100	89/88	434
			279/270A00	18.8/25.0	52.1/60.1	136.7/145.7	150/150	135/143	466/474	148.5/157.5	150/175	149/157	486/494
			280/271A00	37.6/50.0	104.2/120.3	201.8/190.9	225/200	195/212	518/534	213.6/202.7	225/225	208/226	538/554
			281/272A00	56.3/75.0	156.4/180.4	228.0/251.0	250/300	255/281	570/594	239.8/262.8	250/300	269/295	590/614
		HIGH	NONE	–	–	74.4/73.5	90/90	78/77	425	86.2/85.3	100/100	92/91	445
			279/270A00	18.8/25.0	52.1/60.1	139.5/148.6	150/150	138/146	477/485	151.3/160.4	175/175	152/160	497/505
			280/271A00	37.6/50.0	104.2/120.3	204.6/193.8	225/225	198/216	529/545	216.4/205.6	225/225	212/229	549/565
			281/272A00	56.3/75.0	156.4/180.4	230.8/253.9	250/300	258/285	581/605	242.6/265.7	250/300	272/298	601/625
	460–3–60	STD	NONE	–	–	34.0	45	36	233	40.2	50	43	245
			282/273A00	25.0	30.1	71.6	80	70	263	77.8	80	77	275
			283/274A00	50.0	60.1	94.1	100	105	293	100.3	110	112	305
			284/275A00	75.0	90.2	124.2	150	139	323	130.4	150	146	335
		MED	NONE	–	–	35.1	45	37	245	41.3	50	44	257
			282/273A00	25.0	30.1	72.7	80	71	275	78.9	80	79	287
			283/274A00	50.0	60.1	95.2	100	106	305	101.4	110	113	317
			284/275A00	75.0	90.2	125.3	150	141	335	131.5	150	148	347
		HIGH	NONE	–	–	36.6	45	39	250	42.8	50	46	262
			282/273A00	25.0	30.1	74.2	80	73	280	80.4	90	80	292
			283/274A00	50.0	60.1	96.7	100	108	310	102.9	110	115	322
			284/275A00	75.0	90.2	126.8	150	142	340	133.0	150	149	352
	575–3–60	STD	NONE	–	–	26.6	30	28	184	31.4	40	33	192
			285/276A00	24.8	23.9	56.4	60	55	208	61.2	70	61	216
			286/277A00	49.6	47.7	86.2	90	83	232	91.0	100	88	240
			287/278A00	74.4	71.6	98.2	110	110	256	103.0	110	116	264
		MED	NONE	–	–	26.6	30	28	184	31.4	40	33	192
			285/276A00	24.8	23.9	56.4	60	55	208	61.2	70	61	216
			286/277A00	49.6	47.7	86.2	90	83	232	91.0	100	88	240
			287/278A00	74.4	71.6	98.2	110	110	256	103.0	110	116	264
		HIGH	NONE	–	–	28.3	35	30	198	33.1	40	35	206
			285/276A00	24.8	23.9	58.1	60	57	222	62.9	70	63	230
			286/277A00	49.6	47.7	87.9	90	85	246	92.7	100	90	254
			287/278A00	74.4	71.6	99.9	110	112	270	104.7	110	118	278

See: “Legend and Notes for Tables 22 — 25” on page 34.

Unit Wire/Fuse or HACR Breaker Sizing Data (cont.) with Factory Installed 2 Speed Indoor Fan Option

Unit RHS	NO M. V–Ph–HZ	IFM-TYPE	ELEC. HTR CRHEATER ***A00 VERT/HORZ	ELEC. HTR Nominal (kW)	ELEC. HTR FLA	NO C.O. or UNPWR C.O. NO P.E. MCA	NO P.E. MAX FUSE or HACR BRKR	NO P.E. DISC. SIZE FLA	NO P.E. DISC. SIZE LRA	w/ P.E. (pwrd fr/unit) MCA	w/ P.E. MAX FUSE or HACR BRKR	w/ P.E. DISC. SIZE FLA	w/ P.E. DISC. SIZE LRA
240/243	208/230–3–60	STD	NONE	–	–	91.3/90.4	100/100	95/94	564	103.1/102.2	125/125	109/108	584
			279/270A00	18.8/25.0	52.1/60.1	156.5/165.6	175/175	155/164	616/624	168.3/177.4	175/200	169/177	636/644
			280/271A00	37.6/50.0	104.2/120.3	221.6/210.7	225/225	215/233	668/684	233.4/222.5	250/250	229/246	688/704
			281/272A00	56.3/75.0	156.4/180.4	247.7/270.8	300/300	275/302	720/744	259.5/282.6	300/300	289/315	740/764
		MED	NONE	–	–	94.8	125	99	560	106.6	125	113	580
			279/270A00	18.8/25.0	52.1/60.1	160.0/170.0	175/175	159/169	612/620	171.8/181.8	175/200	173/182	632/640
			280/271A00	37.6/50.0	104.2/120.3	225.1/215.1	250/225	219/238	664/680	236.9/226.9	250/250	233/251	684/700
			281/272A00	56.3/75.0	156.4/180.4	251.2/275.2	300/300	279/307	716/740	263.0/287.0	300/300	293/321	736/760
		HIGH	NONE	–	–	106.2	125	113	639	118.0	150	126	659
			279/270A00	18.8/25.0	52.1/60.1	171.4/181.4	175/200	173/182	691/699	183.2/193.2	200/200	186/195	711/719
			280/271A00	37.6/50.0	104.2/120.3	236.5/226.5	250/250	232/251	743/759	248.3/238.3	250/250	246/265	763/779
			281/272A00	56.3/75.0	156.4/180.4	262.6/286.6	300/300	292/320	795/819	274.4/298.4	300/350	306/334	815/839
	460–3–60	STD	NONE	–	–	49.1	60	51	291	55.3	60	58	303
			282/273A00	25.0	30.1	86.7	90	86	321	92.9	100	93	333
			283/274A00	50.0	60.1	109.2	125	120	351	115.4	125	128	363
			284/275A00	75.0	90.2	139.3	150	155	381	145.5	150	162	393
		MED	NONE	–	–	51.3	60	54	289	57.5	70	61	301
			282/273A00	25.0	30.1	88.9	90	88	319	95.1	100	96	331
			283/274A00	50.0	60.1	111.4	125	123	349	117.6	125	130	361
			284/275A00	75.0	90.2	141.5	150	158	379	147.7	175	165	391
		HIGH	NONE	–	–	57.0	70	60	329	63.2	80	68	341
			282/273A00	25.0	30.1	94.6	100	95	359	100.8	110	102	371
			283/274A00	50.0	60.1	117.1	125	129	389	123.3	150	137	401
			284/275A00	75.0	90.2	147.2	175	164	419	153.4	175	171	431
	575–3–60	STD	NONE	–	–	36.8	45	39	204	41.6	50	44	212
			285/276A00	24.8	23.9	66.7	70	66	228	71.5	80	72	236
			286/277A00	49.6	47.7	96.4	100	93	252	101.2	110	99	260
			287/278A00	74.4	71.6	108.4	125	121	276	113.2	125	127	284
		MED	NONE	–	–	38.2	50	40	202	43.0	50	46	210
			285/276A00	24.8	23.9	68.1	70	68	226	72.9	80	73	234
			286/277A00	49.6	47.7	97.8	100	95	250	102.6	110	101	258
			287/278A00	74.4	71.6	109.8	125	123	274	114.6	125	128	282
		HIGH	NONE	–	–	40.1	50	42	229	44.9	50	48	237
			285/276A00	24.8	23.9	70.0	70	70	253	74.8	80	75	261
			286/277A00	49.6	47.7	99.7	100	97	277	104.5	110	103	285
			287/278A00	74.4	71.6	111.7	125	125	301	116.5	125	130	309

See: “Legend and Notes for Tables 22 – 25” on page 34.

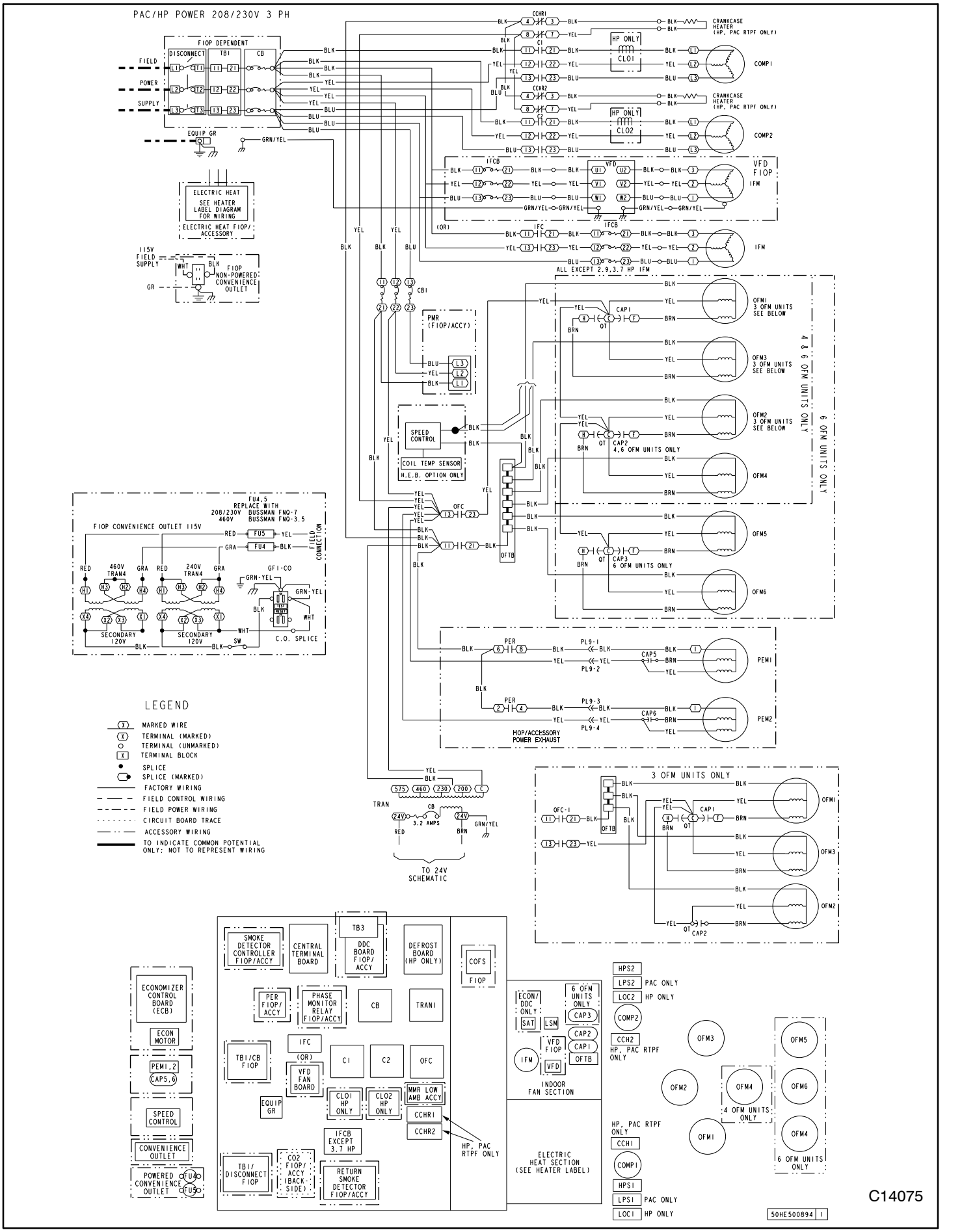

Fig. 4 – Typical Power Diagram (208/230v)

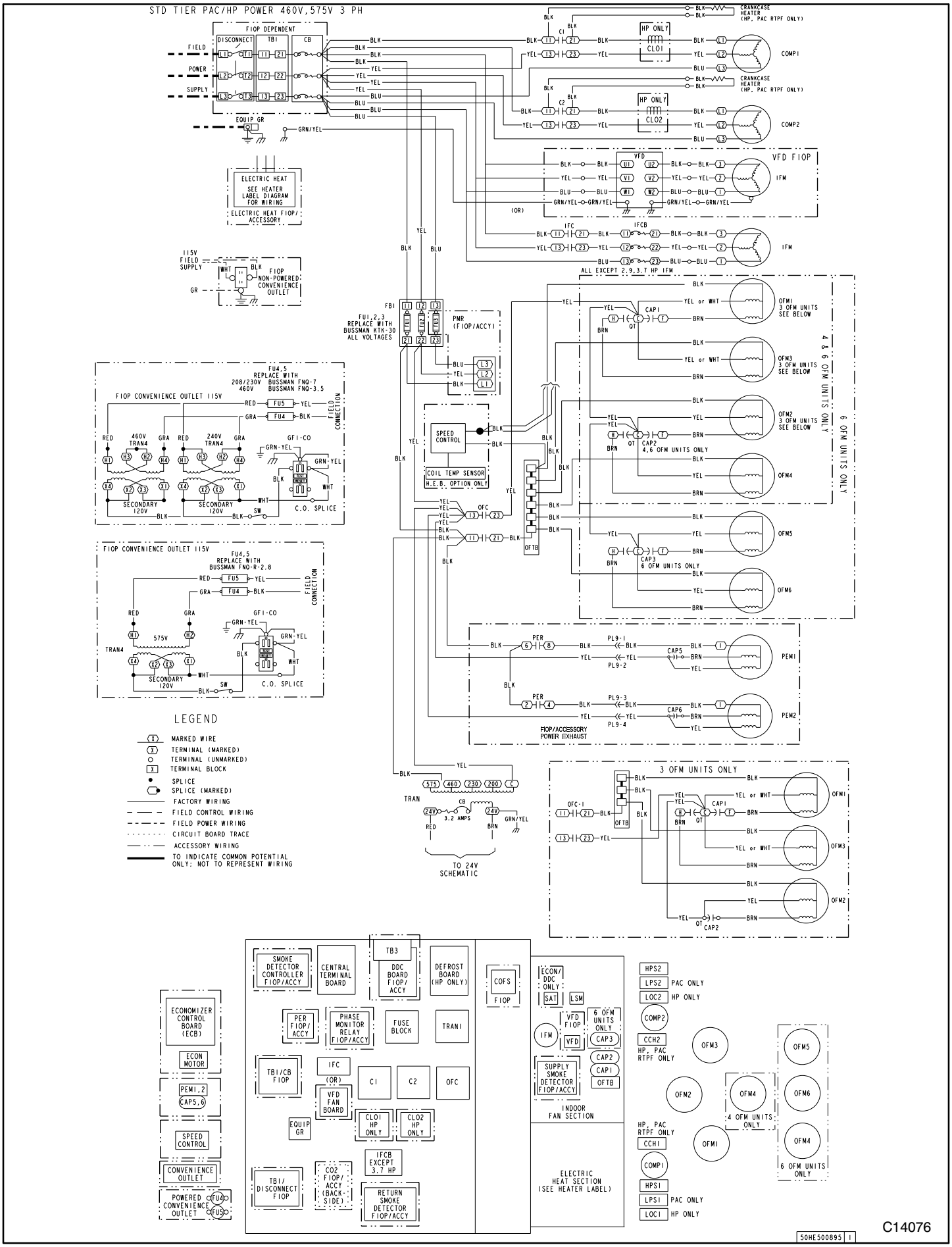

Fig. 5 – Typical Power Diagram (460 & 575 volt)

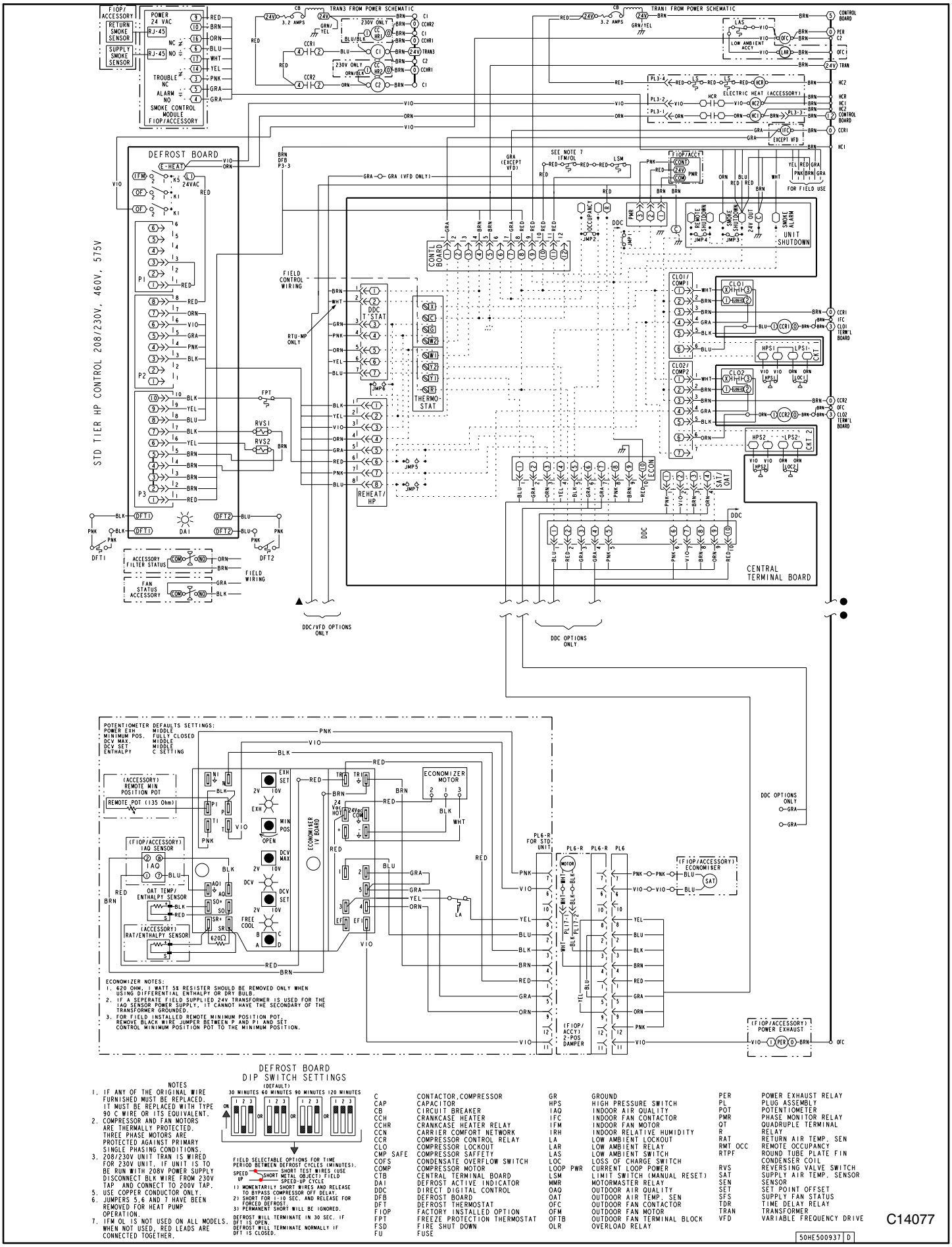

Fig. 5 – Typical Control Diagram

SEQUENCE OF OPERATION

Cooling, unit without economizer

When thermostat calls for cooling, terminals G and Y1 are energized. The indoor fan contactor (IFC), reversing valve solenoid (RVS) and compressor contactor are energized and indoor fan motor, compressor, and outdoor fan starts. The outdoor fan motor runs continuously while unit is cooling.

Two-stage models: If Stage 1 cooling does not satisfy the space load, the space temperature will rise until thermostat calls for Stage 2 cooling (Y2 closes). Defrost Board activates Stage 2 Compressor. Reversing valve 2 switches to Cooling position. Compressor 2 contactor is energized; Compressor 2 starts and Circuit 2 operates in Cooling mode.

When Cooling Stage 2 is satisfied, thermostat Y2 opens. Compressor 2 contactor is de-energized; Compressor 2 stops. Reversing Valve 2 remains energized.

When Cooling Stage 1 is satisfied, thermostat Y1 opens. Compressor 1 contactor is de-energized; Compressor 1 stops. Outdoor fan relay is de-energized; outdoor fans stop. After the Fan Delay period, the Indoor fan contactor is de-energized; indoor fan stops (unless Continuous Fan operation has been selected). Reversing Valve 1 remains energized.

Reversing valve solenoids are energized in Cooling modes. Each solenoid will remain energized until the next Heating mode is initiated for this circuit.

Cooling (2–speed indoor fan motor) —

Per ASHRAE 90.1 2010 standard section 6.4.3.10.b, during the first stage of cooling operation the VFD will adjust the fan motor to provide 2/3rd of the total cfm established for the unit. When a call for the second stage of cooling is required, the VFD will allow the total cfm for the unit established (100%).

Heating, unit without economizer

Upon a request for heating from the space thermostat, terminal W1 will be energized with 24V. The IFC, outdoor fan contactor (OFC), C1, and C2 will be energized. The indoor fan, outdoor fans, and compressor no. 1, and compressor no. 2 are energized and reversing valves are de–energized and switch position.

If the space temperature continues to fall while W1 is energized, W2 will be energized with 24V, and the heater contactor(s) (HC) will be energized, which will energize the electric heater(s).

When the space thermostat is satisfied, W2 will be de–energized first, and the electric heater(s) will be de–energized.

Upon a further rise in space temperature, W1 will be de–energized.

Two compressor models: When the thermostat calls for heating, terminal W1 is energized. Defrost Board de-energizes both reversing valve solenoids and reversing valves move to Heating position. The indoor fan contactor is energized; indoor fan motor starts. Outdoor fan relay is energized; both outdoor fan motors run. Compressor contactors C1 and C2 are energized; both refrigeration circuits operate in Heating mode.

If Stage 1 heating does not satisfy the space load, the space temperature will fall until thermostat calls for Stage 2 heating (W2 closes). Terminal W2 is energized. Defrost Board issues an output at EHEAT. Heater contactor 1 and heater contactor 2 (if installed) are energized; all electric heaters are energized.

When space heating load is partially satisfied, thermostat terminal W2 is de-energized; heater contactors are de-energized and all electric heat is terminated. Stage 1 heating continues.

When the space heating load is fully satisfied, thermostat terminal W1 is also de-energized.

Reversing valve solenoids remain de-energized until the next call for Cooling mode is initiated.

Cooling, unit with economizer IV or economizer X

When free cooling is not available, the compressors will be controlled by the zone thermostat. When free cooling is available, the outdoor air damper is modulated by the economizer IV or X control to provide a 50 to 55°F (10° to 13°C) mixed air temperature into the zone. As the mixed air temperature fluctuates above 55 or below 50°F (13° to 10°C), the dampers will be modulated (open or close) to bring the mixed air temperature back within control.

If mechanical cooling is utilized with free cooling, the outdoor air damper will maintain its current position at the time the compressor is started. If the increase in cooling capacity causes the mixed air temperature to drop below 45°F (7°C), then the outdoor air damper position will be decreased to the minimum position. If the mixed air temperature continues to fall, the outdoor air damper will close. Control returns to normal once the mixed air temperature rises above 48°F (9°C).

If optional power exhaust is installed, as the outdoor air damper opens and closes, the power exhaust fans will be energized and de–energized.

If field–installed accessory CO_2 sensors are connected to the economizer IV or X control, a demand controlled ventilation strategy will begin to operate. As the CO_2 level in the zone increases above the CO_2 setpoint, the minimum position of the damper will be increased proportionally. As the CO_2 level decreases because of the increase in fresh air, the outdoor air damper will be proportionally closed.

For economizer IV or X operation, there must be a thermostat call for the fan (G). If the unit is occupied and the fan is on, the damper will operate at minimum position. Otherwise, the damper will be closed.

When the economizer IV or X control is in the occupied mode and a call for cooling exists (Y1 on the thermostat), the control will first check for indoor fan operation. If the fan is not on, then cooling will not be activated. If the fan is on, then the control will open the economizer IV or X damper to the minimum position.

On the initial power to the economizer IV or X control, it will take the damper up to $2^1/_2$ minutes before it begins to position itself. Any change in damper position will take up to 30 seconds to initiate. Damper movement from full closed to full open (or vice versa) will take between $1^1/_2$ and $2^1/_2$ minutes.

If free cooling can be used as determined from the appropriate changeover command (switch, dry bulb, enthalpy curve, differential dry bulb, or differential enthalpy), then the control will modulate the dampers open to maintain the mixed air temperature setpoint at 50° to 55°F (10° to 13°C).

If there is a further demand for cooling (cooling second stage — Y2 is energized), then the control will bring on compressor stage 1 to maintain the mixed air temperature setpoint. The economizer IV or X damper will be open at maximum position. economizer IV or X operation is limited to a single compressor.

2−Speed Note: When operating in ventilation mode only, the indoor fan motor will automatically adjust to 2/3rd of the total cfm established.

Heating, unit with economizer

When the room temperature calls for heat through terminal W1, the indoor (evaporator) fan contactor (IFC) and heater contactor no. 1 (HC1) are energized and the reversing valve(s) de−energize and switches position. On units equipped for 2 stages of heat, when additional heat is needed, heater contactor no. 2 is energized through W2. The economizer damper moves to the minimum position. When the thermostat is satisfied, the damper moves to the fully closed position.

Defrost

When the temperature of the outdoor coil drops below 28°F (−2°C) as sensed by the defrost thermostat (DFT2) and the defrost timer is at the end of a timed period (adjustable at 30, 60, 90 or 120 minutes), reversing valve solenoids (RVS1 and RVS2) are energized and the OFC is de−energized. This switches the position of the reversing valves and shuts off the outdoor fan. The electric heaters (if installed) will be energized.

The unit continues to defrost until the coil temperature as measured by DFT2 reaches 65°F (18°C), or the duration of defrost cycle completes a 10−minute period.

During the Defrost mode, if circuit 1 defrosts first, RVS1 will oscillate between Heating and Cooling modes until the Defrost mode is complete.

At the end of the defrost cycle, the electric heaters (if installed) will be de−energized; the reversing valves switch and the outdoor fan motor will be energized. The unit will now operate in the Heating mode.

If the space thermostat is satisfied during a defrost cycle, the unit will continue in the Defrost mode until the time or temperature constraints are satisfied.

Automatic changeover

When the system selection switch is set at AUTO. position, unit automatically changes from heating operation to cooling operation when the temperature of the conditioned space rises to the cooling level setting. When the temperature of the conditioned space falls to the heating level setting, unit automatically changes from cooling to heating operation (with a 3°F deadband in between).

Continuous air circulation

Turn unit power on. Set system control at OFF position. Set fan switch at ON position. The indoor fan contactor is energized through the thermostat switch and the indoor fan runs continuously.

Emergency heat

When the switch is on (thermostat is set to the EM HT position), compressor circuit and outdoor thermostats are bypassed, and the second stage of thermostat energizes the indoor blower and the electric resistance heaters.

GUIDE SPECIFICATIONS – RHS181 – 243

HEAT PUMP / ELECTRIC HEAT PACKAGED ROOFTOP

HVAC Guide Specifications

Size Range:15 to 20 Nominal Tons

Section **Description**

23 06 80 Schedules for Decentralized HVAC Equipment

23 06 80.13 Decentralized Unitary HVAC Equipment Schedule

23 06 80.13.A. Rooftop unit schedule

1. Schedule is per the project specification requirements.

23 07 16 HVAC Equipment Insulation

23 07 16.13 Decentralized, Rooftop Units:

23 07 16.13.A. Evaporator fan compartment:

1. Interior cabinet surfaces shall be insulated with a minimum 1/2–in. thick, minimum 1 1/2 lb density, flexible fiberglass insulation bonded with a phenolic binder, neoprene coated on the air side.
2. Insulation and adhesive shall meet NFPA 90A requirements for flame spread and smoke generation.

23 07 16.13.B. Electric heat compartment:

1. Aluminum foil–faced fiberglass insulation shall be used.
2. Insulation and adhesive shall meet NFPA 90A requirements for flame spread and smoke generation.

23 09 13 Instrumentation and Control Devices for HVAC

23 09 13.23 Sensors and Transmitters

23 09 13.23.A. Thermostats

1. Thermostat must
   a. energize both “W” and “G” when calling for heat.
   b. have capability to energize 2 different stages of cooling, and 2 different stages of heating.
   c. include capability for occupancy scheduling.

23 09 23 Direct–digital Control system for HVAC

23 09 23.13

23 09 23.13.A

23 09 33 Electric and Electronic Control System for HVAC

23 09 33.13 Decentralized, Rooftop Units:

23 09 33.13.A. General:

1. Shall be complete with self–contained low–voltage control circuit protected by a resettable circuit breaker on the 24–v transformer side. Transformer shall have 75VA capability.
2. Shall utilize color–coded wiring.
3. Shall include a central control terminal board to conveniently and safely provide connection points for vital control functions such as: smoke detectors, phase monitor, economizer, thermostat, DDC control options, and low and high pressure switches.
4. Unit shall include a minimum of one 8–pin screw terminal connection board for connection of control wiring.
5. Shall include integrated defrost system to prevent excessive frost accumulation during heating duty, and shall be controlled as follows:
   a. Defrost shall be initiated on the basis of time and coil temperature.
   b. A 30,60,90,120 minute timer shall activate the defrost cycle only if the coil temperature is low enough to indicate a heavy frost condition.
   c. Defrost cycle shall terminate when defrost thermostat is satisfied and shall have a positive termination time of 10 minutes.
6. Defrost system shall also include:
   a. Defrost Cycle Indicator LED.
   b. Dip switch selectable defrost time between 30, 60, 90 and 120 minutes. Factory set at 30 minutes.
   c. Molded plug connection to insure proper connection.

23 09 33.23.B. Safeties:

1. Compressor over–temperature, over current.

2. Loss of charge switch.
   a. Units with 2 compressors shall have different sized connectors for the circuit 1 and circuit 2 loss of charge switches. They shall physically prevent the cross-wiring of the safety switches between circuits 1 and 2.
   b. Loss of charge switch shall use different color wire than the high pressure switch. The purpose is to assist the installer and service technician to correctly wire and or troubleshoot the rooftop unit.
3. High pressure switch
   a. Units with 2 compressors shall have different sized connectors for the circuit 1 and circuit 2 high pressure switches. They shall physically prevent the cross-wiring of the safety switches between circuits 1 and 2.
   b. High pressure switch shall use different color wire than the low pressure switch. The purpose is to assist the installer and service technician to correctly wire and or troubleshoot the rooftop unit.
4. Freeze protection thermostat, evaporator coil.
5. Automatic reset, motor thermal overload protector.

23 09 93 Sequence of Operations for HVAC Controls

23 09 93.13 Decentralized, Rooftop Units:

23 09 93.13 INSERT SEQUENCE OF OPERATION

23 40 13 Panel Air Filters

23 40 13.13 Decentralized, Rooftop Units:

23 40 13.13.A. Standard filter section

1. Shall consist of factory–installed, low velocity, throwaway 2–in. thick fiberglass filters of commercially available sizes.
2. Unit shall use only one filter size. Multiple sizes are not acceptable.
3. Filters shall be accessible through a dedicated, weather tight panel.
4. 4–in. filter capabilities shall be capable with pre engineered and approved filter track field installed accessory. This kit requires field furnished filters.

23 81 19 Self–Contained Air Conditioners

23 81 19.13 Medium–Capacity Self–Contained Air Conditioners (RHS181–243)

23 81 19.13.A. General

1. Outdoor, rooftop mounted, electrically controlled, heating and cooling unit utilizing a(n) hermetic scroll compressor(s) for cooling duty and gas combustion for heating duty.
2. Factory assembled, single–piece heating and cooling rooftop unit. Contained within the unit enclosure shall be all factory wiring, piping, controls, and special features required prior to field start–up.
3. Unit shall use environmentally safe, R–410A refrigerant.
4. Unit shall be installed in accordance with the manufacturer's instructions.
5. Unit must be selected and installed in compliance with local, state, and federal codes.

23 81 19.13.B. Quality Assurance

1. Unit meets ASHRAE 90.1–2007 minimum efficiency requirements.
2. Unit shall be rated in accordance with AHRI Standard 340/360.
3. Unit shall be designed to conform to ASHRAE 15.
4. Unit shall be ETL–tested and certified in accordance with ANSI Z21.47 Standards and ETL–listed and certified under Canadian standards as a total package for safety requirements.
5. Insulation and adhesive shall meet NFPA 90A requirements for flame spread and smoke generation.
6. Unit casing shall be capable of withstanding 500–hour salt spray exposure per ASTM B117 (scribed specimen).
7. Unit casing shall be capable of withstanding Federal Test Method Standard No. 141 (Method 6061) 5000–hour salt spray.
8. Unit shall be designed in accordance with ISO 9001:2000, and shall be manufactured in a facility registered by ISO 9001:2000.
9. Roof curb shall be designed to conform to NRCA Standards.
10. Unit shall be subjected to a completely automated run test on the assembly line. The data for each unit will be stored at the factory, and must be available upon request.
11. Unit shall be designed in accordance with UL Standard 1995, including tested to withstand rain.
12. Unit shall be constructed to prevent intrusion of snow and tested to prevent snow intrusion into the control box up to 40 mph.
13. Unit shake tested to assurance level 1, ASTM D4169 to ensure shipping reliability.
14. High Efficient Motors listed shall meet section 313 of the Energy Independence and Security Act of 2007 (EISA 2007).

23 81 19.13.C. Delivery, Storage, and Handling

1. Unit shall be stored and handled per manufacturer's recommendations.
2. Lifted by crane requires either shipping top panel or spreader bars.
3. Unit shall only be stored or positioned in the upright position.

23 81 19.13.D. Project Conditions

1. As specified in the contract.

23 81 19.13.E. Project Conditions

1. As specified in the contract.

23 81 19.13.F. Operating Characteristics

1. Unit shall be capable of starting and running at 115°F (46°C) ambient outdoor temperature, meeting maximum load criteria of AHRI Standard 340/360 at ± 10% voltage.
2. Compressor with standard controls shall be capable of operation from 30°F (–1°C) , ambient outdoor temperatures. Accessory kits are necessary if mechanically cooling at ambient temperatures below 30°F (–1°C).
3. Unit shall discharge supply air vertically or horizontally as shown on contract drawings.
4. Unit shall be factory configured and ordered for vertical supply & return configurations.
5. Unit shall be factory furnished for either vertical or horizontal configuration without the use of special conversion kits. No field kits conversion is possible.
6. Unit shall be capable of mixed operation: vertical supply with horizontal return or horizontal supply with vertical return.

23 81 19.13.G. Electrical Requirements

1. Main power supply voltage, phase, and frequency must match those required by the manufacturer.

23 81 19.13.H. Unit Cabinet

1. Unit cabinet shall be constructed of galvanized steel, and shall be bonderized and coated with a pre–painted baked enamel finish on all externally exposed surfaces.
2. Unit cabinet exterior paint shall be: film thickness, (dry) 0.003 inches minimum, gloss (per ASTM D523, 60°F): 60, Hardness: H–2H Pencil hardness.
3. Evaporator fan compartment interior cabinet insulation shall conform to AHRI Standards 340/360 minimum exterior sweat criteria. Interior surfaces shall be insulated with a minimum 1/2–in. thick, 1 lb density, flexible fiberglass insulation, neoprene coated on the air side. Aluminum foil–faced fiberglass insulation shall be used in the heat compartment.
4. Base of unit shall have a minimum of four locations for factory thru–the–base electrical connections. Connections shall be internal to the cabinet to protect from environmental issues.
5. Base Rail
   a. Unit shall have base rails on a minimum of 2 sides.
   b. Holes shall be provided in the base rails for rigging shackles to facilitate maneuvering and overhead rigging.
   c. Holes shall be provided in the base rail for moving the rooftop by fork truck.
   d. Base rail shall be a minimum of 16 gauge thickness.
6. Condensate pan and connections:
   a. Shall be a sloped condensate drain pan made of a non–corrosive material.
   b. Shall comply with ASHRAE Standard 62.
   c. Shall use a 3/4–in –14 NPT drain connection at the end of the drain pan. Connection shall be made per manufacturer's recommendations.
7. Top panel:
   a. Shall be a multi–piece top panel linked with water tight flanges and interlocking systems.
8. Electrical Connections
   a. All unit power wiring shall enter unit cabinet at a single, factory–prepared, knockout location.
   b. Thru–the–base capability
      (1.) Thru–the–base provisions/connections are available as standard with every unit. When bottom connections are required, field furnished couplings are required.
      (2.) No basepan penetration, other than those authorized by the manufacturer, is permitted.
9. Component access panels (standard)
   a. Cabinet panels shall be easily removable for servicing.
   b. Unit shall have one factory installed, tool–less, removable, filter access panel.
   c. Panels covering control box and filters shall have molded composite handles while the blower access door shall have an integrated flange for easy removal.
   d. Handles shall be UV modified, composite. permanently attached, and recessed into the panel.
   e. Screws on the vertical portion of all removable access panel shall engage into heat resistant, molded composite collars.
   f. Collars shall be removable and easily replaceable using manufacturer recommended parts.

23 81 19.13.I. N/A

23 81 19.13.J. Coils

1. Standard Aluminum/Copper Coils: on all models.
   a. Standard evaporator and condenser coils shall have aluminum lanced plate fins mechanically bonded to seamless internally grooved copper tubes with all joints brazed.
   b. Evaporator coils shall be leak tested to 150 psig, pressure tested to 450 psig, and qualified to UL 1995 burst test at 1775 psig.
   c. Condenser coils shall be leak tested to 150 psig, pressure tested to 650 psig, and qualified to UL 1995 burst test at 1980 psig.
2. Optional Pre-coated aluminum fin condenser coils: on all models.
   a. Shall have a durable epoxy-phenolic coating to provide protection in mildly corrosive coastal environments.

b. Coating shall be applied to the aluminum fin stock prior to the fin stamping process to create an inert barrier between the aluminum fin and copper tube.
c. Epoxy-phenolic barrier shall minimize galvanic action between dissimilar metals.

3. Optional Copper-fin evaporator and condenser coils: on all models.
   a. Shall be constructed of copper fins mechanically bonded to copper tubes and copper tube sheets.
   b. Galvanized steel tube sheets shall not be acceptable.
   c. A polymer strip shall prevent coil assembly from contacting the sheet metal coil pan to minimize potential for galvanic corrosion between coil and pan.
4. Optional E-coated aluminum-fin evaporator and condenser coils: on all models.
   a. Shall have a flexible epoxy polymer coating uniformly applied to all coil surface areas without material bridging between fins.
   b. Coating process shall ensure complete coil encapsulation of tubes, fins and headers.
   c. Color shall be high gloss black with gloss per ASTM D523-89.
   d. Uniform dry film thickness from 0.8 to 1.2 mil on all surface areas including fin edges.
   e. Superior hardness characteristics of 2H per ASTM D3363-92A and cross-hatch adhesion of 4B-5B per ASTM D3359-93.
   f. Impact resistance shall be up to 160 in.-lb (ASTM D2794-93).
   g. Humidity and water immersion resistance shall be up to minimum 1000 and 250 hours respectively (ASTM D2247-92 and ASTM D870-92).
   h. Corrosion durability shall be confirmed through testing to be no less than 1000 hours salt spray per ASTM B117-90.

23 81 19.13.K. Refrigerant Components

1. Refrigerant circuit shall include the following control, safety, and maintenance features:
   a. Thermostatic Expansion Valve (TXV) shall help provide optimum performance across the entire operating range. Shall contain removable power element to allow change out of power element and bulb without removing the valve body.
   b. High capacity refrigerant filter drier on each refrigerant circuit.
   c. Service gauge connections on suction and discharge lines.
   d. Pressure gauge access through a specially designed screen on the side of the unit.
   e. Precision–sized suction line accumulator on each refrigerant circuit shall protect from oil being removed from the scroll compressor rotating orbiter and plate during the activation of the defrost mode and switching back and forth from cooling and heating operations.
2. Compressors
   a. Unit shall use one fully hermetic, scroll compressor for each independent refrigeration circuit.
   b. Models shall be available with 2 compressor/2 stage cooling.
   c. Compressor motors shall be cooled by refrigerant gas passing through motor windings.
   d. Compressors shall be internally protected from high discharge temperature conditions.
   e. Compressors shall be protected from an over–temperature and over–amperage conditions by an internal, motor overload device.
   f. Compressor shall be factory mounted on rubber grommets.
   g. Compressor motors shall have internal line break thermal, current overload and high pressure differential protection.
   h. Crankcase heaters shall be provided by the factory.
   i. 23 81 19.13.L. Filter Section

1. Filters access is specified in the unit cabinet section of this specification.
2. Filters shall be held in place by a preformed slide out filter tray, facilitating easy removal and installation.
3. Shall consist of factory–installed, low velocity, throw–away 2–in. thick fiberglass filters.
4. Filters shall be standard, commercially available sizes.
5. Only one size filter per unit is allowed.
6. 4–in filter capability is possible with a field installed pre engineered slide out filter track accessory. 4–in filters are field furnished.

23 81 19.13.M. Evaporator Fan and Motor

1. Evaporator fan motor:
   a. Shall have inherent automatic–reset thermal overload protection or circuit breaker.
   b. Shall have a maximum continuous bhp rating for continuous duty operation; no safety factors above that rating shall be required.
2. Belt–driven Evaporator Fan:
   a. Belt drive shall include an adjustable–pitch motor pulley and belt break protection system.
   b. Shall use rigid pillow block bearing system with lubricate fittings at are accessible or lubrication line.
   c. Blower fan shall be double–inlet type with forward–curved blades.
   d. Shall be constructed from steel with a corrosion resistant finish and dynamically balanced.

23 81 19.13.N. Condenser Fans and Motors

1. Condenser fan motors:

a. Shall be a totally enclosed motor.
b. Shall use permanently lubricated bearings.
c. Shall have inherent thermal overload protection with an automatic reset feature.
d. Shall use a shaft−down design.

2. Condenser Fans:
   a. Shall be a direct−driven propeller type fan.
   b. Shall have aluminum blades riveted to corrosion−resistant steel spiders and shall be dynamically balanced.

23 81 19.13.O. Special Features, Options and Accessories

1. 2 Speed indoor fan motor system for 2−stage cooling models only.
   a. Evaporator fan motor:
      (1.) Shall have permanently lubricated bearings.
      (2.) Shall have a maximum continuous bhp rating for continuous duty operation; no safety factors above that rating.
      (3.) Shall be Variable Frequency duty and 2−speed control.
      (4.) Shall contain motor shaft grounding ring to prevent electrical bearing fluting damage by safely diverting harmful shaft voltages and bearing currents to ground.
2. Variable Frequency Drive (VFD). Only available on 2−speed indoor fan motor option:
   a. Shall be installed inside the unit cabinet, mounted, wired and tested.
   b. Shall contain Electromagnetic Interference (EMI) frequency protection.
   c. Insulated Gate Bi−Polar Transistors (IGBT) used to produce the output pulse width modulated (PWM) waveform, allowing for quiet motor operation.
   d. Self diagnostics with fault and power code LED indicator. Field accessory Display Kit available for further diagnostics and special setup applications.
   e. RS485 capability standard.
   f. Electronic thermal overload protection.
   g. 5% swinging chokes for harmonic reduction and improved power factor.
   h. All printed circuit boards shall be conformal coated.
3. Standard Integrated Economizers (Factory installed on 3 Phase Models Only. Field installed on all 3 and 1 Phase Models):
   a. Integrated, gear−driven parallel modulating blade design type capable of simultaneous economizer and compressor operation.
   b. Independent modules for vertical or horizontal return configurations shall be available. Vertical and horizontal return modules shall be available as a factory installed option.
   c. Damper blades shall be galvanized steel with composite gears. Plastic or composite blades on intake or return shall not be acceptable.
   d. Shall include all hardware and controls to provide free cooling with outdoor air when temperature and/or humidity are below setpoints.
   e. Shall be equipped with gear driven dampers for both the outdoor ventilation air and the return air for positive air stream control.
   f. Standard models shall be equipped with low−leakage dampers, not to exceed 2% leakage at 1 in. wg pressure differential. Economizer controller on electromechanical units shall be Honeywell W7212 that provides:
      (1.) Combined minimum and DCV maximum damper position potentiometers with compressor staging relay.
      (2.) Functions with solid state analog enthalpy or dry bulb changeover control sensing.
      (3.) Contain LED indicates for:
      When free cooling is available
      When module is in DCV mode
      When exhaust fan contact is closed
   g. Ultra low leak economizer X system shall be available on models with 2−speed Variable Frequency Drive (VFD) systems. Only available on 2−speed indoor fan motor systems with electromechanical controls.
      (1.) Maximum damper leakage rate to be equal to or less than 4.0 cfm/sq. ft. at 1.0 in. w.g., meeting or exceeding ASHRAE 90.1 requirements. Economizer controller on electromechanical units shall be Honeywell W7220 that provides:
      (2.) 2−line LCD interface screen for setup, configuration and troubleshooting
      (3.) On−board fault detection and diagnostics
      (4.) Sensor failure loss of communication identification
      (5.) Automatic sensor detection
      (6.) Capabilities for use with multiple−speed indoor fan systems
      (7.) Utilize digital sensors: Dry bulb and Enthalpy
   h. Shall be capable of introducing up to 100% outdoor air.
   i. Shall be equipped with a barometric relief damper capable of relieving up to 100% return air.
   j. Shall be designed to close damper(s) during loss−of−power situations with spring return built into motor.

k. Dry bulb outdoor air temperature sensor shall be provided as standard. Outdoor air sensor setpoint shall be adjustable and shall range from 40 to 100°F / 4 to 38°C. Additional sensor options shall be available as accessories.
l. The economizer controller shall also provide control of an accessory power exhaust unit function. Factory set at 100%, with a range of 0% to 100%.
m. The economizer shall maintain minimum airflow into the building during occupied period and provide design ventilation rate for full occupancy. A remote potentiometer may be used to override the damper setpoint.
n. Dampers shall be completely closed when the unit is in the unoccupied mode.
o. Economizer controller shall accept a 2–10 Vdc CO_2 sensor input for IAQ/DCV control. In this mode, dampers shall modulate the outdoor air damper to provide ventilation based on the sensor input.
p. Compressor lockout sensor shall open at 35°F (2°C) and close closes at 50°F (10°C).
q. Actuator shall be direct coupled to economizer gear. No linkage arms or control rods shall be acceptable.
r. Economizer controller shall provide indications when in free cooling mode, in the DCV mode, or the exhaust fan contact is closed.

4. Two–Position Motorized Damper
   a. Damper shall be a Two–Position Damper. Damper travel shall be from the full closed position to the field adjustable %–open setpoint.
   b. Damper shall include adjustable damper travel from 25% to 100% (full open).
   c. Damper shall include single or dual blade, gear driven dampers and actuator motor.
   d. Actuator shall be direct coupled to damper gear. No linkage arms or control rods shall be acceptable.
   e. Damper will admit up to 100% outdoor air for applicable rooftop units.
   f. Damper shall close upon indoor (evaporator) fan shutoff and/or loss of power.
   g. The damper actuator shall plug into the rooftop unit's wiring harness plug. No hard wiring shall be required.
   h. Outside air hood shall include aluminum water entrainment filter.
5. Manual damper
   a. Manual damper package shall consist of damper, air inlet screen, and rain hood which can be preset to admit up to 25% outdoor air for year round ventilation.
6. Head Pressure Control Package
   a. Controller shall control coil head pressure by condenser–fan speed modulation or condenser–fan cycling and wind baffles.
   b. Shall consist of solid–state control and condenser–coil temperature sensor to maintain condensing temperature between 90°F (32°C) and 110°F (43°C) at outdoor ambient temperatures down to –20°F (–29°C).
7. Condenser Coil Hail Guard Assembly
   a. Shall protect against damage from hail.
   b. Shall be louvered style design.
8. Unit–Mounted, Non–Fused Disconnect Switch:
   a. Switch shall be factory–installed, internally mounted.
   b. National Electric Code (NEC) and UL approved non–fused switch shall provide unit power shutoff.
   c. Shall be accessible from outside the unit.
   d. Shall provide local shutdown and lockout capability.
9. Convenience Outlet:
   e. Non–Powered convenience outlet.
      (1.) Outlet shall be powered from a separate 115/120v power source.
      (2.) A transformer shall not be included.
      (3.) Outlet shall be factory–installed and internally mounted with easily accessible 115–v female receptacle.
      (4.) Outlet shall include 15 amp GFI receptacles with independent fuse protection.
      (5.) Outlet shall be accessible from outside the unit.
      (6.) Outlet shall include a field–installed "Wet in Use" cover.
10. N/A
11. Fan/Filter Status Switch:
    a. Switch shall provide status of indoor evaporator fan (ON/OFF) or filter (CLEAN/DIRTY).
    b. Status shall be displayed either over communication bus (when used with direct digital controls) or with an indicator light at the thermostat.
12. Centrifugal Power Exhaust:
    a. Power exhaust shall be used in conjunction with an integrated economizer.
    b. Independent modules for vertical or horizontal return configurations shall be available.
    c. Horizontal power exhaust is shall be mounted in return ductwork.
    d. Power exhaust shall be controlled by economizer controller operation. Exhaust fans shall be energized when dampers open past the 0–100% adjustable setpoint on the economizer control.
13. Roof Curbs (Vertical):
    a. Full perimeter roof curb with exhaust capability providing separate air streams for energy recovery from the exhaust air without supply air contamination.

b. Formed galvanized steel with wood nailer strip and shall be capable of supporting entire unit weight.
c. Permits installation and securing of ductwork to curb prior to mounting unit on the curb.

14. N/A
15. High−Static Indoor Fan Motor(s) and Drive(s):
    a. High−static motor(s) and drive(s) shall be factory−installed to provide additional performance range.
16. N/A
17. Outdoor Air Enthalpy Sensor:
    a. The outdoor air enthalpy sensor shall be used to provide single enthalpy control. When used in conjunction with a return air enthalpy sensor, the unit will provide differential enthalpy control. The sensor allows the unit to determine if outside air is suitable for free cooling.
18. Return Air Enthalpy Sensor:
    a. The return air enthalpy sensor shall be used in conjunction with an outdoor air enthalpy sensor to provide differential enthalpy control.
19. Indoor Air Quality (CO_2) Sensor:
    a. Shall be able to provide demand ventilation indoor air quality (IAQ) control.
    b. The IAQ sensor shall be available in duct mount, wall mount, or wall mount with LED display. The setpoint shall have adjustment capability.
20. Smoke detectors:
    a. Shall be a Four−Wire Controller and Detector.
    b. Shall be environmental compensated with differential sensing for reliable, stable, and drift−free sensitivity.
    c. Shall use magnet−activated test/reset sensor switches.
    d. Shall have tool−less connection terminal access.
    e. Shall have a recessed momentary switch for testing and resetting the detector.
    f. Controller shall include:
        (1.) One set of normally open alarm initiation contacts for connection to an initiating device circuit on a fire alarm control panel.
        (2.) Two Form−C auxiliary alarm relays for interface with rooftop unit or other equipment.
        (3.) One Form−C supervision (trouble) relay to control the operation of the Trouble LED on a remote test/reset station.
        (4.) Capable of direct connection to two individual detector modules.
        (5.) Can be wired to up to 14 other duct smoke detectors for multiple fan shutdown applications.
21. Time Guard
    a. Shall prevent compressor short cycling by providing a 5−minute delay (±2 minutes) before restarting a compressor after shutdown for any reason.
    b. One device shall be required per compressor.
22. Barometric Hood (Horizontal Economizer Applications)
    a. Shall be required when a horizontal economizer and barometric relief are required. Barometric relief damper must be installed in the return air (horizontal) duct work. This hood provides weather protection.
23. Electric Heat:
    a. Heating Section
        (1.) Heater element open coil resistance wire, nickel−chrome alloy, 0.29 inches inside diameter, strung through ceramic insulators mounted on metal frame. Coil ends are staked and welded to terminal screw slots.
        (2.) Heater assemblies are provided with integral fusing for protection of internal heater circuits not exceeding 48 amps each. Auto reset thermo limit controls, magnetic heater contactors (24 v coil) and terminal block all mounted in electric heater control box (minimum 18 ga galvanized steel) attached to end of heater assembly.
24. California OSHPD Seismic Certification Label
    a. Units meet the seismic requirements of the International Code Council Evaluation Service (ICC−ES) document AC156 (Acceptance Criteria for Seismic Qualification by Shake−Table Testing of Nonstructural Components and Systems) and per International Building Code (IBC 2009) at an SDS (g) value of 2.00 z/h=1.0, Ip=1.5 and certified by independent structural engineers.
    b. Units shall include a certification label that meets the CA OSHPD Special Seismic Certification pre−approval labeling requirements on the external chassis of the unit.
25. Hinged Access Panels
    a. Shall provide easy access through integrated quarter turn latches.
    b. Shall be on major panels of: filters, control box, fan motor and compressor.
26. Display Kit for Variable Frequency Drive
    a. Kit allows the ability to access the VFD controller programs to provide special setup capabilities and diagnostics.
    b. Kit contains display module, mounting bracket and communication cable.
    c. Display Kit can be permanently installed in the unit or used on any VFD controller as needed.

Copyright 2014 International Comfort Products
Lewisburg, Tennessee 37091 USA
www.GoICPCommercial.com