Comfortmaker®
Air Conditioning & Heating

RGS
Product Specifications

PACKAGE GAS HEATING/ELECTRIC COOLING, R–410A SINGLE PACKAGE ROOFTOP 3 – 15 TONS (1 & 3 Phase)

BUILT TO LAST, EASY TO INSTALL AND SERVICE

- R-410A HFC refrigerant
- ASHRAE 90.1 energy compliant efficiency levels
- Single-stage cooling capacity control on all 036-072 models and the 091,101 and 121 models.
- Two stage cooling capacity control on 090,102,120,150 and 180 models
- Rated in accordance with ARI Standard 210/240 (036-060 sizes) and 340/360 (072-180 sizes)
- Designed in accordance with Underwriters' Laboratories Standard 1995
- Listed by UL and UL, Canada or ETL and ETL, Canada
- Exclusive non-corrosive composite condensate pan in accordance with ASHRAE 62 Standard, sloping design; side or center drain
- Gas efficiencies up to 82%
- Induced draft combustion
- Redundant gas valve, with 1 or 2 stages of heating
- Pre-painted exterior panels and tested to 500 hours salt spray protection
- Fixed refrigerant metering system
- Fully insulated cabinet
- Exclusive IGC solid-state control for on-board diagnostics with LED error code designation, burner control logic.
- "Low NOx" models available that meet California Air Quality Management NOx requirements and include stainless steel heat exchangers
- Cooling operating range from 40 F up to 115 F.
- Access panels with easy grip handles and no-strip screw feature
- Two-inch disposable return air filters
- Tool-less filter access door
- Direct Drive ECM (036–060, H voltage only)
- Standard belt drive, constant torque motor
- Advanced terminal board for simple safety circuit troubleshooting and control box arrangement
- Field Convertible from vertical to horizontal airflow on all models. No special kit required on 036-150 models. Field accessory supply duct kit required for 180 size model only
- Provisions for thru-the-bottom power entry capability
- Single point gas and electric connections
- Full perimeter base rail with built-in rigging adapters and fork truck slots
- Scroll compressors with internal line-break overload protection
- Copper tube, aluminum fin coils
- 24-volt control circuit protected with resettable circuit breaker
- Permanently lubricated evaporator-fan motor
- Permanently lubricated, totally enclosed, shaft down condenser motors
- Low pressure, freeze protection, and high pressure switches
- Exclusive IGC anti-cycle protection for gas heat operation
- Solid-state electronic direct spark ignition system
- Flame roll-out safety protector
- Liquid line filter drier

WARRANTY

- 15 Year limited warranty on stainless steel heat exchanger
- 10 Year limited warranty on aluminized heat exchanger
- 5 Year limited warranty on compressor
- 1 Year limited warranty on parts

AHRI CERTIFIED™ www.ahridirectory.org

Use of the AHRI Certified TM Mark indicates a manufacturer's participation in the program. For verification of certification for individual products, go to www.ahridirectory.org .

ASHRAE 90.1 COMPLIANT

c UL US

RGS036–072

RGS091–121

UNIT PERFORMANCE DATA – Single Stage Cooling

UNIT	Nominal Tons	COOLING Net Cap. (Btuh)	COOLING SEER	COOLING EER	GAS HEATING Input Cap. (Btuh)	GAS HEATING Thermal Eff. %	Unit Dimensions H x W x L	Unit Weight lb. [kg]
RGS036*^AA0AAA	3	34,600	13.0	11.0	72,000–115,000	80–82	33–3/8" x 46–3/4" x 74–3/8"	483 [219]
RGS048*^AA0AAA	4	45,000	13.0	11.0	72,000–150,000	80–82	33–3/8" x 46–3/4" x 74–3/8"	537 [244]
RGS060*^AA0AAA	5	59,000	13.0	10.8	72,000–150,000	80–82	33–3/8" x 46–3/4" x 74–3/8"	569 [258]
RGS072*^AA0AAA	6	70,000	N/A	11.0	72,000–150,000	80–82	41–3/8" x 46–3/4" x 74–3/8"	652 [296]
RGS091*^AA0AAA	7–1/2	88,000	N/A	11.0	125,000–224,000	80–82	41–1/4" x 59–1/2" x 88–1/8"	810 [367]
RGS101*^AA0AAA	8–1/2	97,000	N/A	11.0	125,000–224,000	82	49–3/8" x 59–1/2" x 88–1/8"	910 [413]
RGS121*^AA0AAA	10	117,000	N/A	11.0	180,000–250,000	80–82	49–3/8" x 59–1/2" x 88–1/8"	965 [438]

UNIT PERFORMANCE DATA – Dual Stage Cooling

UNIT	Nominal Tons	COOLING Net Cap. (Btuh)	COOLING SEER	COOLING EER	GAS HEATING Input Cap. (Btuh)	GAS HEATING Thermal Eff. %	Unit Dimensions H x W x L	Unit Weight lb. [kg]
RGS090*^AA0AAA	7–1/2	83,000	N/A	11.0	125,000–224,000	82	41–1/4" x 59–1/2" x 88–1/8"	810 [367]
RGS102*^AA0AAA	8–1/2	99,000	N/A	11.0	125,000–224,000	80–82	49–3/8" x 59–1/2" x 88–1/8"	910 [413]
RGS120*^AA0AAA	10	114,000	N/A	11.1	180,000–250,000	80–82	49–3/8" x 59–1/2" x 88–1/8"	965 [438]
RGS150*^AA0AAA	12–1/2	140,000	N/A	10.8	180,000–250,000	80–82	49–3/8" x 59–1/2" x 88–1/8"	1116 [506]
RGS180*^AA0AAA	15	174,000	N/A	10.8	180,000–350,000	80–81	57–3/8" x 63–3/8" x 115–7/8"	1380 [627]

UNIT PERFORMANCE DATA – Single Stage Cooling Low Nox Models

UNIT	Nominal Tons	COOLING Net Cap. (Btuh)	COOLING SEER	COOLING EER	GAS HEATING Input Cap. (Btuh)	GAS HEATING Thermal Eff. %	Unit Dimensions H x W x L	Unit Weight lb. [kg]
RGS036*^AA0AAA	3	34,600	13.0	11.0	60,000–90,000	80–82	33–3/8" x 46–3/4" x 74–3/8"	483 [219]
RGS048*^AA0AAA	4	45,000	13.0	11.0	60,000–120,000	80–82	33–3/8" x 46–3/4" x 74–3/8"	537 [244]
RGS060*^AA0AAA	5	59,000	13.0	10.8	60,000–120,000	80–82	33–3/8" x 46–3/4" x 74–3/8"	569 [258]

* Indicates Unit voltage: K = 208/230–1–60, H = 208/230–3–60, L = 460–3–60, S = 575–3–60

^ See model nomenclature listing for gas heating options.

NOTE: BASE MODEL NUMBERS LISTED. SEE MODEL NOMENCLATURE LISTING FOR ADDITIONAL OPTIONS

MODEL NUMBER NOMENCLATURE

MODEL SERIES	R	G	S	0	9	1	H	D	A	A	0	A	A	A
Position Number	1	2	3	4	5	6	7	8	9	10	11	12	13	14

Type

R = Rooftop

G = Gas/Electric

Efficiency

S = Standard ASHRAE 90.1–2010 Efficiency

Nominal Cooling Capacity

036 = 3 Tons
048 = 4 Tons
060 = 5 Tons
072 = 6 Tons
091 = 7.5 Tons (Single Compressor)
101 = 8.5 Tons (Single Compressor)
121 = 10 Tons (Single Compressor)
090 = 7.5 Tons (Dual Compressor)
102= 8.5 Tons (Dual Compressor)
120 = 10 Tons (Dual Compressor)
150 = 12.5 Tons (Dual Compressor)
180 =15 Tons (Dual Compressor)

Voltage

K = 208/230–1–60[2]
H = 208/230–3–60
L = 460–3–60
S = 575–3–60

Heating Capacity

D = Low Heat
E = Medium Heat
F = High Heat
L = Low Heat, Low NOx
M = Medium Heat, Low NOx
N = High Heat, Low NOx
S = Low Heat, Stainless Steel Heat Exchanger
R = Medium Heat, Stainless Steel Heat Exchanger
T = High Heat, Stainless Steel Heat Exchanger

Motor Option (Indoor Fan)

A = Standard Motor (3 to 15 Ton)
C = Medium Static Motor (3 to 15 Ton)
B = High Static Motor (3–12.5 ton, 1 Speed, 3 phase models only, 7.5 to 15 ton, 2 speed)
E = High Static Motor , High Efficiency Motor (15 ton only)
G = High Static Motor with Hot Gas Reheat (15 ton only)
H = High Static Motor with Hot Gas ReHeat (5 to 12.5 ton, 1–speed motors), (7.5 to 15 ton, 2–speed motors)
X = Direct Drive ECM 9036–060, H Voltage only)

Outdoor Air Options / Control [1]

A = None
B = Economizer w/Bara–relief, OA Temp sensor
E = Economizer w/Bara–relief + CO2 Sensor, OA Temp sensor
H = Economizer w/Bara–relief, enthalpy sensor
L = Economizer w/Bara–relief + CO2 Sensor, enthalpy sensor
U = Temp Ultra Low Leak Economizer w/Bara–relief
W = Enthalpy Ultra Low Leak Economizer w/Bara–relief
P = 2–Position damper

Factory Installed Options

0A = No Options
AT = Non–powered 115v C.O.
4B = Non–Fused Disconnect
BB = Powered Convenience Outlet
BR = Supply Air Smoke Detector
BP = Return Air Smoke Detector
AA = Easy Access Hinged Panels

Condenser / Evaporator Coil Configuration

A = Aluminum / Copper Cond & Evap Coil
B = Precoat Alum/Copper Cond with Alum / Copper Evap (3 phase only)
C = E–Coated Alum/Copper Cond with Alum / Copper Evap (3 phase only)
D = E–Coated Alum / Copper Cond & Evap (3 phase only)
E = Copper/Copper Cond & Alum/Copper Evap (3 phase only)
F = Copper/Copper Cond & Evap (3 phase only)

Motor Type Option

A = Standard Single Speed Indoor Fan Motor. For W7212 Controls
B = Standard Single Speed Indoor Fan Motor. For W7220 Controls
T = 2 Speed Indoor Motor VFD Controller (For 2–stage units only)

NOTE: Factory installed options are NOT available on single phase models. This includes economizers and 2 position dampers.
[1] A combinations of FIOPS are available.
[2] Production of single phase voltage models has been discontinued per DOE regulations. Single phase RGS models are only available unit current inventory is exhausted. Refer to the RGX Specification Sheets for single phase.

Table 1 – FACTORY–INSTALLED OPTIONS AND FIELD–INSTALLED ACCESSORIES

CATEGORY	ITEM	FACTORY INSTALLED OPTION	FIELD INSTALLED ACCESSORY
Cabinet	Thru–the–base electrical or gas–line connections		X
	Supply Duct Cover (180 size only)		X
	Hinged Access Panels	X	
Coil Options	Cu/Cu indoor and/or outdoor coils[1,6]	X	
	Pre–coated outdoor coils[1,6]	X	
	Premium, E–coated outdoor coils[1,6]	X	
Humidity Control	Hot Gas Re–Heat Adaptive Dehumidification System[5,6]	X	
Condenser Protection	Condenser coil hail guard (louvered design)[6]	X	X
Controls	Thermostats, temperature sensors, and subbases		X
	Smoke detector (supply and/or return air)	X	
	Time Guard II compressor delay control circuit		X
	Phase Monitor		X
Economizers & Outdoor Air Dampers	EconoMi$er IV for electro–mechanical controls – Non FDD (Standard air leak damper models)[5,6]	X	X
	EconoMi$er2 for DDC controls, complies with FDD (Standard and Ultra Low Leak air damper models)[6,8]	X	X
	Motorized 2 position outdoor air damper[6]	X	X
	Manual outdoor air damper (25% and 50%)		X
	Barometric relief[1]	X	X
	Power exhaust		X
	EconoMi$er X for electro–mechanical controls, complies with FDD. (Standard and Ultra Low Leak air damper models)[5,6]	X	X
Economizer Sensors & IAQ Devices	Single dry bulb temperature sensors[2]	X	X
	Differential dry bulb temperature sensors[2]		X
	Single enthalpy sensors[2]	X	X
	Differential enthalpy sensors[2]		X
	Wall or duct mounted CO_2 sensor[2]		X
	Unit mounted CO_2 sensor[2]	X	
Gas Heat	Propane conversion kit		X
	Stainless steel heat exchanger	X	
	High altitude conversion kit[8]		X
	Flue Shield (036–150 sizes only)		X
	Flue Discharge Deflector (036–150 sizes only)		X
Indoor Motor & Drive	Multiple motor and drive packages	X	
	2–speed indoor fan motor system system w/VFD controller (2–stage cool only with electrical mechanical controls)	X	
	Display Kit for 2–speed indoor fan motor system system with VFD		X
Low Ambient Control	Winter start kit[3]		X
	Motormaster head pressure controller[3]		X
Power Options	Convenience outlet (un–powered)	X	
	Convenience outlet (powered)[5]	X	
	Non–fused disconnect[4]	X	
	Disconnect Switch Bracket (180 size only)		X
Roof Curbs	Roof curb 14–in (356mm)		X
	Roof curb 24–in (610mm)		X

NOTES:
1. Included with economizer.
2. Sensors used to optimize economizer performance.
3. See application data for assistance.
4. Available on units with MOCP's of 80 amps or less.
5. Not available as factory installed option on single phase (208/230/1/60) models. Use field–installed accessory where available.
6. FDD (Fault Detection and Diagnostic) capability per California Title 24 section 120.2.
7. Hot Gas Re–Heat is no longer available for the RGS 036–060 models.
8. Altitude Compensation Table in Accessory Kit Instructions.

NOTE: All factory installed economizers on 036–180 products are downflow only. Horizontal economizers must be field installed.

FACTORY OPTIONS AND/OR ACCESSORIES

Economizer

Economizers save energy, money and improve comfort levels in the conditioned space. They bring in fresh, outside air for ventilation; and provide cool outside air to cool your building. This also is the preferred method of low ambient cooling. When integrated with CO2 sensors, economizers can provide even more savings by coupling the ventilation air to only that amount required based on space occupancy. Economizers are available, installed and tested by the factory, with either enthalpy or temperature dry−bulb inputs. There are also models for electromechanical, direct digital controllers and single speed fan or 2−speed indoor fan motors. Additional sensors are available as accessories to optimize the economizer. Economizers include gravity controlled barometric relief that helps equalize building pressure and ambient air pressures. This can be a cost effective solution to prevent building pressurization. Economizers are available in Ultra Low Leak and standard low leak versions.

CO_2 Sensor

Improves productivity and saves money by working with the economizer to intake only the correct amount of outside air for ventilation. As occupants fill your building, the CO_2 sensor detects their presence through increasing CO_2 levels, and opens the economizer appropriately.

When the occupants leave, the CO_2 levels decrease, and the sensor appropriately closes the economizer. This intelligent control of the ventilation air, called Demand Control Ventilation (DCV) reduces the overall load on the rooftop, saving money.

Smoke Detectors

Smoke detectors make your application safer and your job easier. Smoke detectors immediately shut down the rooftop unit when smoke is detected. They are available, installed by the factory, for supply air, return air, or both.

Louvered Hail Guards

Sleek, louvered panels protect the condenser coil from hail damage, foreign objects, and incidental contact.

Convenience Outlet (Powered or un−powered)

Reduce service and/or installation costs by including a convenience outlet in your specification. ICP will install this service feature at our factory. Provides a convenient, 15 amp, 115v GFCI receptacle with “Wet in Use“ cover. The “Powered” option allows the installer to power the outlet from the line side of the disconnect or load side as required by code. The “un−powered” option is to be powered from a separate 115/120v power source.

Non−fused Disconnect

This OSHA−compliant, factory installed, safety switch allows a service technician to locally secure power to the rooftop.

Disconnect Switch Bracket

Provides a pre−engineered and sized mounting bracket for applications requiring a unit mounted fused and non−fused disconnect of greater than 100 amps. Bracket assures that no damage will occur to coils when mounting with screws and other fasteners (180 size only).

Power Exhaust with Barometric Relief

Superior internal building pressure control. This field installed accessory may eliminate the need for costly, external pressure control fans.

Time Guard II Control Circuit

This accessory protects your compressor by preventing short−cycling in the event of some other failure, prevents the compressor from restarting for 30 seconds after stopping. Not required with authorized commercial thermostats.

Motorized 2−Position Damper

The new ICP 2−position, motorized outdoor air damper admits up to 100% outside air. Using reliable, gear−driven technology, the 2−position damper opens to allow ventilation air and closes when the rooftop stops, stopping unwanted infiltration. Not available with 2−speed indoor fan motor system models.

Manual OA Damper

Manual outdoor air dampers are an economical way to bring in ventilation air. The dampers are available in 25% and 50% versions. Not available with 2−speed indoor fan motor system models.

Optional Hot Gas Re−Heat Adaptive Dehumidification System

ICP’s Hot Gas Re−Heat Adaptive Dehumidification System is an all−inclusive factory installed option that can be ordered with any RGS072−180 rooftop unit.

This system expands the envelope of operation of ICP’s rooftop products to provide unprecedented flexibility to meet year round comfort conditions.

The Hot Gas Re−Heat adaptive dehumidification system has the industry’s only dual dehumidification mode setting. The Hot Gas Re−Heat system includes two new modes of operation.

The RGS072−180 rooftop coupled with the Hot Gas Re−Heat system is capable of operating in normal design cooling mode, subcooling mode, and hot gas reheat mode. Normal design cooling mode is when the unit will operate under its normal sequence of operation by cycling compressors to maintain comfort conditions.

Subcooling mode will operate to satisfy part load type conditions when the space requires combined sensible and a higher proportion of latent load control. Hot Gas Reheat mode will operate when outdoor temperatures diminish and the need for latent capacity is required for sole humidity control. Hot Gas Reheat mode will provide neutral air for maximum dehumidification operation.

2−Speed Indoor Fan Motor System Speed System

ICP's 2−speed indoor fan motor system system saves energy and installation time by utilizing a Variable Frequency Drive (VFD) to automatically adjust the indoor fan motor speed in sequence with the units cooling operation. Per ASHRAE 90.1 standard section 6.4.3.10.b, during the first stage of cooling operation the VFD will adjust the fan motor to provide 2/3rd of the total cfm established for the unit. When a call for the second stage of cooling is required, the VFD will allow the total cfm for the unit established (100%). During the heating mode the VFD will allow total design cfm (100%) operation and during the ventilation mode the VFD will allow operation to 2/3rd of total cfm.

Compared to single speed indoor fan motor systems, ICP's 2−speed indoor fan motor system system can save substantial energy, 25%+, versus single speed indoor fan motor systems.

The VFD used in ICP's 2−speed indoor fan motor system system has soft start capabilities to slowly ramp up the speeds, thus eliminating any high inrush air volume during initial start−up. It also has internal over−current protection for the fan motor and a field installed display kit that allows adjustment and in depth diagnostics of the VFD.

This 2−speed indoor fan motor system system is available on models with 2−stage cooling operation with electromechanical, Multi Protocol controls. Both space sensor and conventional thermostats/controls can be used to provide accurate control in any application.

The 2−speed indoor fan motor system system is very flexible for initial fan performance set up and adjustment. The standard factory shipped VFD is pre−programmed to automatically stage the fan speed between the first and second stage of cooling. The unit fan performance static pressure and cfm can be easily adjusted using the traditional means of pulley adjustments. The other means to adjust the unit static and cfm performance is to utilize the field installed Display Kit and adjust the frequency and voltage in the VFD to performance requirements. In either case, once set up, the VFD will automatically adjust the speed between the cooling stage operations.

MotorMaster Head Pressure Controller

The MotorMaster motor controller is a low ambient, head pressure controller kit that is designed to maintain the unit's condenser head pressure during periods of low ambient cooling operation. This device should be used as an alternative to economizer free cooling when economizer usage is either not appropriate or desired. The MotorMaster will either cycle the outdoor fan motors or operate them at reduced speed to maintain the unit operation, depending on the model.

Winter Start Kit

The winter start kit by ICP extends the low ambient limit of your rooftop to 25°F (−4°C). The kit bypasses the low pressure switch, preventing nuisance tripping of the low pressure switch. Other low ambient precautions may still be prudent.

Propane Heating

Convert your gas heat rooftop from standard natural gas operation to propane using this field installed kit.

High Altitude Heating

High altitudes have less oxygen, which means heat exchangers need less fuel. The new gas orifices in this field installed kit make the necessary adjustment for high altitude applications. They restore the optimal fuel to air mixture and maintain healthy combustion at altitudes above 2000 ft (610m). Kits may not be required in all areas.

Hinged Access Panels

Allows access to unit's major components with specifically designed hinged access panels. Panels are: filter, control box, fan motor, and compressor.

Flue Discharge Deflector

The flue discharge deflector is a useful accessory when flue gas recirculation is a concern. By venting the flue discharge upwards, the deflector minimizes the chance for a neighboring unit to intake the flue exhaust (036−150 sizes only).

Optional Stainless Steel Heat Exchanger

The stainless steel heat exchanger option provides the tubular heat exchanger be made out of a minimum 20 gauge type 409 stainless steel for applications where the mixed air to the heat exchanger is expected to drop below 45°F (7°C). Stainless steel may be specified on applications where the presence of airborne contaminants require its use (applications such as paper mills) or in areas with very high outdoor humidity that may result in severe condensation in the heat exchanger during cooling operation.

FACTORY OPTIONS AND/OR ACCESSORIES (cont.)

Flue Discharge Heat Shield

The flue discharge heat shield keeps people from touching the rooftop unit's potentially hot flue discharge. This is especially useful for ground level applications, where more, untrained people could have access to the unit's exterior (036−150 sizes only).

Alternate Motors and Drives

Some applications need larger horsepower motors, some need more airflow, and some need both. Regardless of the case, your ICP expert has a factory installed combination to meet your application. A wide selection of motors and pulleys (drives) are available, factory installed, to handle nearly any application.

Thru−the−Base Connections

Thru−the−base connections, available as an accessory, are necessary to ensure proper connection and seal when routing wire and piping through the rooftop's basepan and curb. These couplings eliminate roof penetration and should be considered for gas lines, main power lines, as well as control power.

Supply Duct Cover

This supply duct cover is required when field converting the factory standard vertical duct supply to horizontal duct supply configuration. One required per unit (180 size only).

ACCESSORIES − RGS036−180

ECONOMIZERS

ECONOMI$ER IV (FOR 1-SPEED INDOOR FAN MOTOR ONLY) − STANDARD LEAK CONTROLLER INCLUDED

VERTICAL

Model Number	Description	Use With Model Size	Approx Ship Wt. LBS (KGS)
CRECOMZR020A02	STANDARD LEAK Vertical EconoMi$er IV with solid-state controller, gear-driven, damper, spring return actuator, up to 100% barometric relief, supply and outdoor air temperature sensors, and CO2 sensor compatible, for use in non-DDC applications.	036-072 Elect Mech Controls	55 (25)
CRECOMZR021A03	STANDARD LEAK Vertical EconoMi$er IV with solid-state controller, gear-driven, modulating damper, spring return actuator, up to 100% barometric relief, supply and outdoor air temperature sensors, and CO2 sensor compatible, for use in non-DDC applications.	090-150 Elect Mech Controls	80 (36)
CRECOMZR062A00	STANDARD LEAK Vertical EconoMi$er IV with solid-state controller, gear-driven, modulating damper, spring return actuator, up to 100% barometric relief, supply and outdoor air temperature sensors, and CO2 sensor compatible, for use in non-DDC applications.	180 Elect Mech Controls	100 (45)

1 EconoMi$er IV cannot be installed with an EconoMi$er X, Manual Damper, or Motorized Damper.
2 When installed on a unit with hinged panels, hinged panel access kit is also required.
3 Add AXB078EXT for Humidity/Temp control.

HORIZONTAL

Model Number	Description	Use With Model Size	Approx Ship Wt. LBS (KGS)
CRECOMZR024A02	STANDARD LEAK Horizontal EconoMi$er IV with solid-state controller, gear-driven, modulating damper, spring return actuator, up to 100% barometric relief, supply and outdoor air temperature sensors, and CO2 sensor compatible, for use in non-DDC applications.	036-072 Elect Mech Controls	85 (39)
CRECOMZR025A02	STANDARD LEAK Horizontal EconoMi$er IV with solid-state controller, gear-driven, modulating damper, spring return actuator, up to 100% barometric relief, supply and outdoor air temperature sensors, and CO2 sensor compatible, for use in non-DDC applications.	090-150 Elect Mech Controls	105 (48)
CRECOMZR064A00	STANDARD LEAK Horizontal EconoMi$er IV with solid-state controller, gear-driven, modulating damper, spring return actuator, up to 100% barometric relief, supply and outdoor air temperature sensors, and CO2 sensor compatible, for use in non-DDC applications.	18 Elect Mech Controls	115 (52)

1 EconoMi$er IV cannot be installed with an EconoMi$er X, Manual Damper, or Motorized Damper.
2 When installed on a unit with hinged panels, hinged panel access kit is also required.
3 Add AXB078EXT for Humidity/Temp control.

ECONOMIZER X (FOR 1 & 2-SPEED INDOOR FAN MOTOR) – STANDARD LEAK, CONTROLLER INCLUDED			
VERTICAL			
Model Number	**Description**	**Use With Model Size**	**Approx Ship Wt. LBS (KGS)**
CRECOMZR076A00	STANDARD LEAK - Vertical EconoMi$er X with solid-state W7220 controller, gear-driven, modulating damper, spring return actuator, up to 100% barometric relief, supply and outdoor air temperature sensors, and CO2 sensor compatible, for use in electro mechanical controls only. Controller meets California Title 24 Section 120.2 Fault Detection and Diagnostic (FDD) requirements.	036-072 Elect Mech Controls	105
CRECOMZR078A00	STANDARD LEAK - Vertical EconoMi$er X with solid-state W7220 controller, gear-driven, modulating damper, spring return actuator, up to 100% barometric relief, supply and outdoor air temperature sensors, and CO2 sensor compatible, for use in electro mechanical controls only. Controller meets California Title 24 Section 120.2 Fault Detection and Diagnostic (FDD) requirements.	090-150 Elect Mech Controls	105
CRECOMZR080A00	STANDARD LEAK - Vertical EconoMi$er X with solid-state W7220 controller, gear-driven, modulating damper, spring return actuator, up to 100% barometric relief, supply and outdoor air temperature sensors, and CO2 sensor compatible, for use in electro mechanical controls only. Controller meets California Title 24 Section 120.2 Fault Detection and Diagnostic (FDD) requirements.	180 Elect Mech Controls	115

1 EconoMi$er X cannot be installed with an EconoMi$er IV, Manual Damper or Motorized Damper.
2 When installed on a unit with hinged panels, hinged panel access kit is also required.

HORIZONTAL			
Model Number	**Description**	**Use With Model Size**	**Approx Ship Wt. LBS (KGS)**
CRECOMZR077A00	STANDARD LEAK - Horizontal EconoMi$er X with solid-state W7220 controller, gear-driven, modulating damper, spring return actuator, up to 100% barometric relief, supply and outdoor air temperature sensors, and CO2 sensor compatible, for use in electro mechanical controls only. Controller meets California title 24 Section 120.2 Fault Detection and Diagnostic (FDD) requirements.	036-072 Elect Mech Controls	105
CRECOMZR079A00	STANDARD LEAK - Horizontal EconoMi$er X with solid-state W7220 controller, gear-driven, modulating damper, spring return actuator, up to 100% barometric relief, supply and outdoor air temperature sensors, and CO2 sensor compatible, for use in electro mechanical controls only. Controller meets California Title 24 Section 120.2 Fault Detection and Diagnostic (FDD) requirements.	090-150 Elect Mech Controls	105
CRECOMZR081A00	STANDARD LEAK - Horizontal EconoMi$er X with solid-state W7220 controller, gear-driven, modulating damper, spring return actuator, up to 100% barometric relief, supply and outdoor air sensors, and CO2 sensor compatible, for use in electro mechanical controls only. Controller meets California Title 24 Section 120.2 Fault Detection and Diagnostic (FDD) requirements.	180 Elect Mech Controls	115

1 EconoMi$er X cannot be installed with an EconoMi$er IV, Manual Damper or Motorized Damper.
2 When installed on a unit with hinged panels, hinged panel access kit is also required.

ECONOMI$ER X (FOR 1 & 2-SPEED INDOOR FAN MOTOR) – ULTRA LOW LEAK, CONTROLLER INCLUDED			
VERTICAL			
Model Number	**Description**	**Use With Model Size**	**Approx Ship Wt. LBS (KGS)**
CRECOMZR067A00	Ultra LOW LEAK - Vertical EconoMi$er X with solid-state W7220 controller, gear-driven, modulating damper, spring return actuator, up to 100% barometric relief, supply and outdoor air temperature sensors, and CO2 sensor compatible, for use in electro mechanical controls only. Also includes return , outside air, and relief air damper leakage that meets Title 24 section 140.4 and ASHRAE 90.1 requirements. Controller meets California Title 24 Fault Detection and Diagnostic (FDD) requirements.	036-072 Elect Mech Controls	105
CRECOMZR069A00	Ultra LOW LEAK - Vertical EconoMi$er X with solid-state W7220 controller, gear-driven, modulating damper, spring return actuator, up to 100% barometric relief, supply and outdoor air temperature sensors, and CO2 sensor compatible, for use in electro mechanical controls only. Also includes return , outside air, and relief air damper leakage that meets Title 24 section 140.4 and ASHRAE 90.1 requirements. Controller meets California Title 24 Fault Detection and Diagnostic (FDD) requirements.	090-150 Elect Mech Controls	105
CRECOMZR071A00	Ultra LOW LEAK - Vertical EconoMi$er X with solid-state W7220 controller, gear-driven, modulating damper, spring return actuator, up to 100% barometric relief, supply and outdoor air sensors, and CO2 sensor compatible, for use in electro mechanical controls only. Also includes return , outside air, and relief air damper leakage that meets Title 24 section 140.4 and ASHRAE 90.1 requirements. Controller meets California Title 24 Fault Detection and Diagnostic (FDD) requirements.	180 Elect Mech Controls	115

1 EconoMi$er X cannot be installed with an EconoMi$er IV, Manual Damper or Motorized Damper.
2 Currently only available on vertical air flow configuration models. Contact your local MicroMetl account manager 1-800-884-4662 if horizontal model is required.
3 When installed on a unit with hinged panels, hinged panel access kit is also required.

ACCESSORY KITS FOR UNITS WITH HINGED ACCESS PANELS		
VERTICAL		
Model Number	**Description**	**Use With Model Size**
CRPECONV003A00	Vertical accessory kit is required when field installing a vertical economizer on a unit that has hinged access panels. Includes angle and seal strip.	036-072
CRPECONV004A00	Vertical accessory kit is required when field installing a vertical economizer on a unit that has hinged access panels. Includes angle and seal strip.	090-150
CRPECONV007BA00	Vertical & Horizontal accessory kit is required when field installing a 2-position damper or vertical & horizontal economizer on a unit that has hinged access panels. Includes angle and seal strip.	180
HORIZONTAL		
Model Number	**Description**	**Use With Model Size**
CRHNGPNL001A00	Horizontal accessory kit is required when field installing a horizontal economizer on a unit that has hinged access panels. Includes door panel, angle and seal strip.	036-072
CRHNGPNL002A00	Horizontal accessory kit is required when field installing a horizontal economizer on a unit that has hinged access panels. Includes door panel, angle and seal strip.	090-150
CRHNGPNL003A00	Currently in development - please contact application engineering ... Horizontal accessory kit is required when field installing a horizontal economizer, power exhaust, 2-position damper or manual damper on a unit that has hinged access panels. Includes door panel, angle and seal strip.	180

ACCESSORIES – RGS036–180 (cont.)

ECONOMIZER SENSORS		
Model Number	**Description**	**Use With Model Size**
DNTEMPSN002A00	Outdoor or Return Dry Bulb Temperature Sensor used with Electro–Mechanical control.	Economizer IV
DNCBDIOX005A00	CO_2 Sensor for use in return airstream. Also includes Aspirator Box required for Duct Mounting.	Economizer IV & X
DNENTDIF004A00	Return Air Enthalpy Sensor used with Electro–Mechanical controls, use with AXB078ENT for differential enthalpy control.	Economizer IV
AXB078ENT	Economizer Differential Enthalpy Control Upgrade	Economizer IV
CRTEMPSN005A00	Outdoor or return dry bulb temperature sensor used with Honeywell W7220 electro–mechanical control.	Economizer X
––HH––57AC–081	Enthalpy control for W7220 controller only. (One required for single enthalpy, two required for differential enthalpy)	Economizer X
NOTE: Supply air temperature sensor (SAT and low ambient lockout switch) provided with economizer IV or economizer X.		

1 Supply air temperature sensor (SAT and low ambient lockout switch) provided with Economi$er IV or EconoMiZer X.
2 Currently only available on vertical air flow configuration models. Contact your local MicroMetl account manager 1-800-884-4662 if horizontal model is required.

ECONOMIZER SENSOR USAGE CHART			
DESIRED CONTROL METHOD		ECONOMI$ER IV [1] REQUIRED FIELD-INSTALLED SENSOR(S)	ECONOMI$ER X [1] REQUIRED FIELD-INSTALLED SENSOR(S)
Single Dry Bulb Control		None. Outside Air dry bulb sensor is factory installed.	None. Outside Air dry bulb sensor is factory installed.
Single Enthalpy Control		(1) AXB078ENT	(1) --HH--57AC-081
Differential Dry Bulb		NA	(1) –HH—57AC-081
Differential Enthalpy Control		(1) AXB078ENT & (1) DNENTDIF004A00	(2) --HH--57AC-081
To Add CO_2 DCV Control with above:	Duct Mount	(1) DNCBDIOX005A00	(1) DNCBDIOX005A00

1 OAT and SAT sensors included for EconoMi$er IV.or EconoMiZer X

POWER EXHAUST		
VERTICAL [1, 2]		
Model Number	**Description**	**Use With Model Size**
DNPWREXH030A01	Vertical Power Exhaust 208/230 volt (1 or 3 Phase)	036 – 072
DNPWREXH021A01	Vertical Power Exhaust 460 volt	036 – 072
DNPWREXH022A01	Vertical Power Exhaust 208/230 volt (1 or 3 Phase)	090 – 150
DNPWREXH023A01	Vertical Power Exhaust 460 volt	090 – 150
DNPWREXH080A00	Vertical Power Exhaust 208/230 volt	180
DNPWREXH081A00	Vertical Power Exhaust 460 volt	180

1 Vertical Power Exhaust requires a vertical Economizer
2 Vertical Power Exhaust package includes exhaust hood, screens, and propeller fan system

HORIZONTAL [1, 2]		
Model Number	**Description**	**Use With Model Size**
DNPWREXH028A01	Horizontal Power Exhaust 208/230 & 575 volt (1 or 3 Phase)	036 – 180
DNPWREXH029A01	Horizontal Power Exhaust 460 volt	036 – 180
DNPWREXH082A00	Horizontal Power Exhaust 208/230 & 575 volt (Mounted on return ductwork)	180
DNPWREXH083A00	Horizontal Power Exhaust 460 volt (Mounted on return duct-work)	180

1 Horizontal Power Exhaust should be duct-mounted in the return duct and is supplied with a single fan and wiring harness
2 Horizontal Power Exhaust package includes exhaust hood, screens, and propeller fan system

ACCESSORIES – RGS036–180 (cont.)

575V TRANSFORMER		
Model Number	**Description**	**Use With Model Size**
1171494 *	Transformer for conversion from 575v to 208/230v power exhaust applications.	ALL

NOTE:

1. 24” Roof curbs are NOT required with vertical power exhaust.
2. Both vertical and horizontal power exhaust packages can be used with either EconoMi$er IV or EconoMi$er X. In either case, the power exhaust is controlled by the EconoMi$er IV, X controller.

* Order --HT--01AH-859, FAST# 1171494, for 575V applications.

SPECIAL – 180 SIZE SPECIFIC ACCESSORIES		
Model Number	**Description**	**Use With Model Size**
CRDISBKT001A00	Disconnect Switch Bracket - Provides a pre-engineered and sized mounting bracket for applications requiring a unit mounted fused and non-fused disconnect of greater than 100 amps. Bracket assures that no damage will occur to coils when mounting with screws and other fasteners.	180
CRDUCTCV002A00	Supply Duct Cover - This supply duct cover is required when field converting the factory standard vertical duct supply to horizontal duct supply configuration. One required per unit.	180

MANUAL OUTDOOR AIR DAMPERS		
Model Number	**Description**	**Use With Model Size**
CRMANDPR001A03	25% Open Manual Fresh Air Damper	036 – 072
CRMANDPR001A02	50% Open Manual Fresh Air Damper	036 – 072
CRMANDPR002A03	25% Open Manual Fresh Air Damper	090 – 150
CRMANDPR002A02	50% Open Manual Fresh Air Damper	090 – 150
CRMANDPR011A00	50% Open Manual Fresh Air Damper	180
MOTORIZED OUTDOOR AIR DAMPERS		
Model Number	**Description**	**Use With Model Size**
CRTWOPOS010A00	Motorized 2 position outdoor air damper (25–100% Outdoor Air)	036 – 072
CRTWOPOS011A00	Motorized 2 position outdoor air damper (25–100% Outdoor Air)	090 – 150
CRTWOPOS014A00	Motorized 2 position outdoor air damper (25–100% Outdoor Air)	180

NOTE: Economizer IV, Economizer X, Manual Damper and 2–Position damper are all mutually exclusive and cannot be installed together.

1. Manual dampers include hood assembly, bird screen, adjustable damper blade (to allow up to the rated outdoor air %), and bottom panel with opening.
2. Motorized dampers include bottom panel with opening (100% two–position damper includes 30% barometric relief capability), and adjustable damper (to allow up to the rated outdoor air %)
3. Motorized dampers will close on loss of power to the rooftop unit.
   Manual and motorized dampers are not compatible with a vertical power exhaust module.

LOUVERED HAIL GUARDS – CONDENSER COIL		
Model Number	**Description**	**Use With Model Size**
CRLVHLGD011A00	Louvered Condenser Coil Hail Guard -- Includes louvered panel(s) to protect condenser coil from damage and vandalism.	036
CRLVHLGD012A00		048-060
CRLVHLGD013A00		072
CRLVHLGD014A00		090-091
CRLVHLGD015A00		101
CRLVHLGD016A00		102-150
CRLVHLGD032A00		180

ACCESSORIES – RGS036–180 (cont.)

STANDARD ROOF CURBS		
Model Number	**Description**	**Use With Model Size**
CRRFCURB001A01	14” (356 mm) High Roof Curb. Ductwork attaches to the roof curb. Includes thru–the–bottom capability.	036 – 072
CRRFCURB003A01		090 – 150
CRRFCURB074A00		180
CRRFCURB002A01	24” (607 mm) High Roof Curb. Ductwork attaches to the roof curb. Includes thru–the–bottom capability.	036 – 072
CRRFCURB004A01		090 – 150
CRRFCURB075A00		180

THROUGH–THE–BOTTOM/CURB POWER CONNECTION		
Model Number	**Description**	**Use With Model Size**
CRBTMPWR001A01	Thru-the-bottom electrical connections and thru-the-curb (not thru the bottom) gas connections. Includes a 3/4-inch (19 mm) diameter liquid tight conduit fitting for high voltage power wires and (2) 1/2-inch (13 mm) diameter liquid tight conduit fittings for thermostat wires and convenience outlet wires. Includes a 3/4-inch (19 mm) inside pipe coupling and gas plate assembly for thru-the-curb connections. Provides for watertight seals.	036-072
CRBTMPWR003A01	Thru-the bottom power, control and gas connections. Includes a 3/4-inch diameter liquid tight conduit fitting for high voltage power wires, (2) 1/2- inch diameter liquid tight conduits for thermostat wires and convenience outlet wires and 1/2-inch gas adapter fitting for gas piping. Provides for watertight seal.	036-072
CRBTMPWR002A01	Thru-the-bottom electrical connections and thru-the-curb (not thru the bottom) gas connections. Includes a 1-1/4-inch (32 mm) diameter liquid tight conduit fitting for high voltage power wires and (2) 1/2-inch (13 mm) diameter liquid tight conduit fittings for thermostat wires and convenience outlet wires. Includes a 3/4-inch (19 mm) inside pipe coupling and gas plate assembly for thru-the-curb connections. Provides for watertight seals.	090-150
CRBTMPWR004A01	Thru-the bottom power, control and gas connections. Includes a 1-1/4- inch diameter liquid tight conduit fitting for high voltage power wires, (2) 1/2-inch diameter liquid tight conduits for thermostat wires and convenience outlet wires and 3/4-inch gas adapter fitting for gas piping. Provides for watertight seal.	090-150
CRBTMPWR005A01	Thru-the bottom power, control and gas connections. Includes a 1-1/4- inch diameter liquid tight conduit fitting for high voltage power wires, (2) 1/2-inch diameter liquid tight conduits for thermostat wires and convenience outlet wires and 3/4-inch gas adapter fitting for gas piping, 4 cover plates, and gaskets for watertight seal.	180

THROUGH–THE–BOTTOM/CURB POWER CONNECTION		
Model Number	**Description**	**Use With Model Size**
CRBTMPWR006A00	Thru-the bottom power, control and gas connections. Includes a 1-1/2- inch diameter liquid tight conduit fitting for high voltage power wires, (2) 1/2-inch diameter liquid tight conduits for thermostat wires and convenience outlet wires and 3/4-inch gas adapter fitting for gas piping, 4 cover plates, and gaskets for watertight seal.	180
CRBTMPWR007A00	Thru-the bottom power, control and gas connections. Includes a 2-inch diameter liquid tight conduit fitting for high voltage power wires, (2) 1/2- inch diameter liquid tight conduits for thermostat wires and convenience outlet wires and 3/4-inch gas adapter fitting for gas piping, 4 cover plates, and gaskets for watertight seal	180

NOTE: Access to the bottom of the RTU is required to install a THRU-THE-BOTTOM Connection Kit. Recommend installing kit prior to installing RTU on roof curb.

ACCESSORIES – RGS036–180 (cont.)

LP GAS CONVERSION KITS *		
Model Number	**Description**	**Use With Model Size**
CRLPELEV001A00	Propane and Hi Altitude conversion kit. Contains spuds sizes 31, 32, 33, 35, and 36 (5 spuds/ size) and other necessary conversion parts. Use this kit to convert Natural Gas rooftops to Propane and/or high altitude applications.	036 – 150
CRLPELEV002A00	Propane and Hi Altitude conversion kit. Contains spuds sizes 37, 38, 39, 44, and 45 (5 spuds/size) and other necessary conversion parts. Use this kit to convert Natural Gas rooftops to Propane and/or high altitude applications.	036 – 150
CRLPELEV003A00	Propane and Hi Altitude conversion kit. Contains spuds sizes 46, 47, 48, 49, and 50 (5 spuds/size) and other necessary conversion parts. Use this kit to convert Natural Gas rooftops to Propane and/or high altitude applications.	036 – 150
CRLPELEV004A00	Propane and Hi Altitude conversion kit. Contains spuds sizes 51, 52, 53, 54, and 55 (5 spuds/size) and other necessary conversion parts. Use this kit to convert Natural Gas rooftops to Propane and/or high altitude applications.	036 – 150
CRLPELEV007A00	Propane and Hi Altitude conversion kit. Contains spuds sizes 36, 37, 38, and 39 (10 spuds/size) and other necessary conversion parts. Use this kit to convert Natural Gas rooftops to Propane and/or high altitude applications.	180
CRLPELEV008A00	Propane and Hi Altitude conversion kit. Contains spuds sizes 40, 41, 42, and 43 (10 spuds/size) and other necessary conversion parts. Use this kit to convert Natural Gas rooftops to Propane and/or high altitude applications.	180
CRLPELEV009A00	Propane and Hi Altitude conversion kit. Contains spuds sizes 51, 52, 53, 54, and 55 (10 spuds/size) and other necessary conversion parts. Use this kit to convert Natural Gas rooftops to Propane and/ or high altitude applications.	180

* Refer to LP KIT Installation instructions

HEATING UPGRADE KITS		
Model Number	**Description**	**Use With Model Size**
CRFLUEDS001A00	Flue Discharge Deflector -- Directs flue gas exhaust 90 degrees upward from current discharge. Designed to allow tighter distances between unit and combustible surfaces. 24 inch Height. AGA certified [1]	036-150
CRFLUEHD001A01	Flue Exhaust Heat Shield -- Provides a sheet metal guard around the flue gas hood which prevents service personnel or small children from coming into contact with the flue hood. [1]	036-150
CRFLUEDS007A00	Flue Discharge Deflector -- Directs flue gas exhaust 90 degrees upward from current discharge. Designed to allow tighter distances between unit and combustible surfaces.	180

[1] CRFLUEDS001A00 and CRFLUEHD001A01 are mutually exclusive. Cannot install both on the same unit.

ACCESSORIES – RGS036–180 (cont.)

CONTROL UPGRADE KITS		
Model Number	**Description**	**Use With Model Size**
CRDISKIT001A00	2 Speed VFD display kit – Provides the field capability to set up points and troubleshooting codes on the VFD controller. Kit includes display and cable. If preferred, kit can be used for any associated unit with VFD.	All 2 Speed VFD Controllers
NRTIMEGD001A00	Time Guard II -- Automatically prevents the compressor from restarting for at least 4 minutes and 45 seconds after shutdown of the compressor. Not required when a commercial thermostat has a minimum 5 min time delay between cooling cycles available (One required per unit)	All
DNWINSTR001A00	Winter Start Package - Contains time delay relay for timed bypass of low pressure switch on startup.(One required per refrigerant circuit) [1]	All
CRPHASE3001A02	Phase Monitor Control - Provides phase loss/phase reversal protection	All 3 Phase 208/230-3-60 460-3-60
CRPHASE3002A00	Phase Monitor Control - Provides phase loss/phase reversal protection	All 3 Phase 575v
CRSDTEST001A00	Remote keyed attenuator / test / reset station for use with factory installed smoke detectors. Includes power, alarm & trouble indicator lights.	All

[1] If mechanical cooling below 25 degrees ambient is necessary, consider additional low-ambient control measures (for example, economizer or motormaster)

LOW AMBIENT CONTROLS (SIZE 036–121) *		
Model Number	**Description**	**Use With Model Size**
CPLOWAMB001A00	Motormaster® II Low Ambient Control - Enables cooling system to operate down to 0° F (-18° C) by cycling condenser fan on and off. The control is activated by a temperature sensor. No motor change-out required. One required per unit.	All Sizes 208/230-1-60 208/230-3-60 460-3-60 **
HC40GE233 / 1171974 [1]	Motormaster I Compatible Condenser Fan Motor	All Sizes 208/230-1-60 208/230-3-60
HC40GE463 / 1171975 [1]	Motormaster I Compatible Condenser Fan Motor	All Sizes 460-3-60 575-3-60
32LT-900---301	Motormaster I Single-Phase Solid-State Variable Speed Motor Controller enables cooling down to -20° F by varying the speed on the condenser fan.	All Sizes 208/230-1-60 208/203-3-60
32LT-900---611	Motormaster I Single-Phase Solid-State Variable Speed Motor Controller enables cooling down to -20° F (-29° C) by varying the speed on the condenser fan.	All Sizes 460-3-60
HC91CL010 / 1171807 [1]	MFD 10	Refer to MotorMaster I usage table
HC93CA013 / 1175708 [1]	Dual MFD 10 + 10	Refer to MotorMaster I usage table
HC98JA048 / 1173702 [1]	Dual MFD 45 + 10	Refer to MotorMaster I usage table
HC98JA073 / 1177750 [1]	Dual MFD 70 + 10	Refer to MotorMaster I usage table
HC98JA083 / 1173703 [1]	Dual MFD 80 + 10	Refer to MotorMaster I usage table

[1] Available from FAST Parts.
* See usage tables in kit instructions.
** One DNWINSTR001A00 also required per refrigerant circuit.
Sizes 036-072 require one (1) Low Ambient Controller and one (1) compatible condenser fan motor for change-out.
Sizes 090-121 require one (1) Low Ambient Controller and one (2) compatible condenser fan motor for change-out.

LOW AMBIENT CONTROLS (SIZE 150 ONLY) *		
CRLOWAMB030A00	Motormaster V Low Ambient Kit. Mechanical cooling operation down to -20° F (- 29° C)	150 208/230-3-60
CRLOWAMB031A00	Motormaster V Low Ambient Kit. Mechanical cooling operation down to -20° F (- 29° C)	150 460-3-60
CRLOWAMB032A00	Motormaster V Low Ambient Kit. Mechanical cooling operation down to -20° F (- 29° C).	150 575-3-60

NOTE: Also requires two DNWINSTR001A00 Start packages (One per refrigerant circuit). No motor change is required on these specific models.

LOW AMBIENT CONTROLS (SIZE 180 ONLY) *		
CRLOWAMB039A00	Motormaster® I Low Ambient Kit. Mechanical cooling operation down to -20° F (- 29° C). Kit includes 3 motors, MotorMaster controller, wiring label, and required wire ties and connectors, CRWINSTR001A00 also required (one per refrigerant circuit)	180 208/230-3-60
CRLOWAMB040A00	Motormaster® I Low Ambient Kit. Mechanical cooling operation down to -20° F (- 29° C). Kit includes 3 motors, MotorMaster controller, wiring label, and required wire ties and connectors) 575 Volt models also require CRTRXKIT002A00 plus CRWINSTR001A00 also required (one per refrigerant circuit)	180 460-3-60 575-3-60
CRTRXKIT002A00	Motormaster® I Low Ambient Control - Transformer Kit. Must be used in conjunction with Low Ambient Controller if used on 575-3-60 volt models.	180 575-3-60

Table 2 – AHRI COOLING RATING TABLE

UNIT	COOLING STAGES	NOM. CAPACITY (TONS)	NET COOLING CAPACITY (MBH)	TOTAL POWER (KW)	SEER	EER	IEER WITH SINGLE SPEED INDOOR MOTOR	IEER WITH 2–SPEED INDOOR MOTOR
036	1	3	34.0	3.2	13.0	10.60	N/A	N/A
048	1	4	45.0	4.0	13.0	11.00	N/A	N/A
060	1	5	59.0	5.5	13.0	10.75	N/A	N/A
072	1	6	70.0	6.4	N/A	11.00	11.2	N/A
091	1	7.5	88.0	8.0	N/A	11.00	11.2	N/A
090	2	7.5	83.0	7.5	N/A	11.00	11.7	12.8
1001	1	8.5	97.0	8.8	N/A	11.00	11.2	N/A
02	2	8.5	99.0	9.0	N/A	11.00	11.7	12.8
121	1	10	117.0	10.6	N/A	11.00	11.2	N/A
120	2	10	114.0	10.3	N/A	11.10	11.8	12.8
150	2	12.5	140.0	12.9	N/A	10.80	11.0	11.8
180	2	15	174.0	16.1	N/A	10.80	11.7	12.4

Table 3 – DIRECT DRIVE INDOOR ECM – X13 MOTOR

UNIT	COOLING STAGES	NOM. CAPACITY (TONS)	NET COOLING CAPACITY (MBH)	TOTAL POWER (KW)	SEER	EER
036	1	3	34.4	3.1	13.4	11.00
048	1	4	45.0	3.9	13.4	11.40
060	1	5	59.0	5.5	13.2	10.75

LEGEND

AHRI – Air Conditioning, Heating and Refrigeration Institute Test Standard
ASHRAE – American Society of Heating, Refrigerating and Air Conditioning, Inc.
EER – Energy Efficiency Ratio
IEER – Integrated Energy Efficiency Ratio
N/A – Not Applicable
SEER – Seasonal Energy Efficiency Ratio

NOTES:

1. Rated in accordance with AHRI Standard 210/240 or 340/360, as appropriate.
2. Ratings are based on:
   Cooling Standard: 80°F (27°C) db, 67°F (19°C) wb indoor air temp and 95°F (35°C) db outdoor air temp.
   IEER Standard: A measure that expresses cooling part–load EER efficiency for commercial unitary air conditioning and heat pump equipment on the basis of weighted operation at various load capacities.
3. All RGS units comply with ASHRAE 90.1 Energy Standard for minimum SEER and EER requirements.
4. RGS units comply with US Energy Policy Act (2005). To evaluate code compliance requirements, refer to state and local codes.

Use of the AHRI Certified TM Mark indicates a manufacturer's participation in the program For verification of certification for individual products, go to www.ahridirectory.org.

Table 4 – HEATING RATING TABLE – NATURAL GAS & PROPANE

Units		Gas Heat	AL/SS HEAT EXCHANGER INPUT / OUTPUT STAGE 1 (MBH)	AL/SS HEAT EXCHANGER INPUT / OUTPUT STAGE 2 (MBH)	TEMP RISE (DEG F)	THERMAL EFFICIENCY (%)	AFUE (%)
Single Phase*	036	LOW	–	72 / 56	25 – 55	82%	79.1%
		MED	–	115 / 89	55 – 85	80%	78.5%
		HIGH	–	–	–	–	–
	048	LOW	–	72 / 56	25 – 55	82%	79.1%
		MED	–	115 / 90	35 – 65	81%	79%
		HIGH	–	150 / 117	50 – 80	80%	78.8%
	060	LOW	–	72 / 56	20 – 55	82%	79.1%
		MED	–	115 / 90	30 – 65	81%	79%
		HIGH	–	150 / 117	40 – 80	80%	78.8%
Three Phase	036	LOW	–	72 / 56	25 – 55	82%	N/A
		MED	82 / 66	115 / 89	55 – 85	80%	N/A
		HIGH	–	–	–	–	–
	048	LOW	–	72 / 56	25 – 55	82%	N/A
		MED	–	115 / 90	35 – 65	81%	N/A
		HIGH	120 / 96	150 / 117	50 – 80	80%	N/A
	060	LOW	–	72 / 56	20 – 55	82%	N/A
		MED	–	115 / 90	30 – 65	81%	N/A
		HIGH	120 / 96	150 / 117	40 – 80	80%	N/A
	072	LOW	–	72 / 59	15 – 55	82%	N/A
		MED	–	115 / 93	25 – 65	81%	N/A
		HIGH	120 / 96	150 / 120	35 – 80	80%	N/A
	091	LOW	–	125 / 103	20 – 50	82%	N/A
		MED	120 / 98	180 / 148	35 – 65	82%	N/A
		HIGH	180 / 147	224 / 184	45 – 75	82%	N/A
	101	LOW	–	125 / 103	20 – 50	82%	N/A
		MED	120 / 98	180 / 148	30 – 65	82%	N/A
		HIGH	180 / 147	224 / 184	40 – 75	82%	N/A
	121	LOW	120 / 98	180 / 148	25 – 65	82%	N/A
		MED	180 / 147	224 / 184	30 – 65	82%	N/A
		HIGH	200 / 160	250 / 205	35 – 70	80%	N/A
	150	LOW	120 / 98	180 / 148	20 – 65	82%	N/A
		MED	180 / 147	224 / 184	25 – 65	82%	N/A
		HIGH	200 / 160	250 / 205	25 – 70	80%	N/A
	180	LOW	144 / 118	180 / 146	15 – 55	81%	N/A
		MED	192 / 156	240 / 195	20 – 60	81%	N/A
		HIGH	280 / 224	350 / 280	35 – 65	80%	N/A

NOTES:

Heat ratings are for natural gas heat exchangers operated at or below 2000 ft (610 m). For information on propane or altitudes above 2000 ft (610 m), see the Application Data section of this book. Accessory Propane/High Altitude kits are also available.

In the USA the input rating for altitudes above 2000 ft (610m) must be derated by 4% for each 1000 ft (305 m) above sea level. In Canada, the input rating must be derated by 10% for altitudes of 2000 ft (610 m) to 4500 ft (1372 m) above sea level.

* Production of single phase units has been discontinued per DOE regulations. Single phase RGS models are only available until current inventories are exhausted.

Table 5 – HEATING RATING TABLE – LOW NO_X[1]

UNIT		GAS HEAT	LOW NOx HEAT EXCHANGER		TEMP RISE (DEG F)	THERMAL EFFICIENCY (%)	AFUE (%)
			INPUT / OUTPUT STAGE 1 (MBH)	INPUT / OUTPUT STAGE 2 (MBH)			
Single Phase*	036	LOW	–	60 / 47	20 – 50	81%	80.6%
		MED	–	90 / 72	30 – 60	81%	80.6%
		HIGH	–	–	–	–	–
	048	LOW	–	60 / 47	20 – 50	81%	80.6%
		MED	–	90 / 72	30 – 60	81%	80.6%
		HIGH	–	120 / 97	40 – 70	81%	81.5%
	060	LOW	–	60 / 47	15 – 50	81%	80.6%
		MED	–	90 / 72	25 – 60	80%	80.6%
		HIGH	–	120 / 97	35 – 70	80%	81.5%
Three Phase	036	LOW	–	60 / 47	20 – 50	81%	N/A
		MED	–	90 / 72	30 – 60	81%	N/A
		HIGH	–	–	–	–	–
	048	LOW	–	60 / 47	20 – 50	81%	N/A
		MED	–	90 / 72	30 – 60	81%	N/A
		HIGH	–	120 / 97	40 – 70	81%	N/A
	060	LOW	–	60 / 47	15 – 50	81%	N/A
		MED	–	90 / 72	25 – 60	80%	N/A
		HIGH	–	120 / 97	35 – 70	80%	N/A

NOTE:
1. Units meet California's South Coast Air Quality Management District (SCAQMD) Low–NO_x emissions requirement of 40 nanograms per joule or less.

– Not Applicable

* Production of single phase units has been discontinued per DOE regulations. Single phase RGS models are only available until current inventories are exhausted

Table 6 – SOUND PERFORMANCE TABLE

Unit	Cooling Stages	Outdoor Sound (dB) @60hz								
		A–Weighted	63	125	250	500	1000	2000	4000	8000
036	1	80	90.6	80.9	80.2	76	74.6	71.3	68.5	63.9
048	1	81	90.9	84.6	79.5	77.9	76.5	71.1	66.9	62.5
060	1	78	84.0	82.2	76.3	74.8	72.5	68.8	65.6	61.8
072	1	78	88.8	81.8	76.9	74.4	73.3	69.8	66.3	62.7
091	1	82	90.1	82.6	81.0	79.4	77.0	73.0	70.4	66.7
090	2	82	85.8	84.3	80.5	78.7	76.4	72.7	68.3	65.1
101	1	83	91.2	86.4	81.9	81.0	78.3	73.9	71.4	67.3
102	2	82	88.6	85.0	81.6	79.5	77.4	74.1	71.0	66.3
121	1	82	88.6	85.0	81.6	79.5	77.4	74.1	71.0	66.3
120	2	82	89.0	83.1	80.5	78.5	75.5	71.6	69.6	69.3
150	2	87	87.0	85.2	84.6	84.9	82.2	78.4	75.3	72.9
160	2	87	87.0	85.2	84.6	84.9	82.2	78.4	75.3	72.9

LEGEND
dB – Decibel

NOTES:
1. Outdoor sound data is measure in accordance with AHRI standard 270–2008.
2. Measurements are expressed in terms of sound power. Do not compare these values to sound pressure values because sound pressure depends on specific environmental factors which normally do not match individual applications. Sound power values are independent of the environment and therefore more accurate.
3. A–weighted sound ratings filter out very high and very low frequencies, to better approximate the response of "average" human ear. A–weighted measurements for ICP units are taken in accordance with AHRI standard 270–2008.

Table 7 – MINIMUM – MAXIMUM AIRFLOW RATINGS – NATURAL GAS & PROPANE

Unit	Heat Level	Cooling		AL HX Heating		SS HX Heating	
		Minimum	Maximum	Minimum	Maximum	Minimum	Maximum
036	LOW	900	1500	990	2190	990	2190
	MED			1000	1550	1000	1550
	HIGH			–	–	–	–
048	LOW	1200	2000	990	2190	990	2190
	MED			1330	2460	1330	2460
	HIGH			1390	2220	1390	2220
060	LOW	1500	2500	990	2730	990	2730
	MED			1330	2880	1330	2880
	HIGH			1390	2780	1390	2780
072	LOW	1800	3000	990	3640	990	3640
	MED			1330	3450	1330	3450
	HIGH			1390	3170	1390	3170
091	LOW	2250	3750	1900	4750	1900	4750
	MED			2100	3900	2100	3900
	HIGH			2270	3780	2270	3780
101	LOW	2550	4250	1900	4750	1900	4750
	MED			2100	4560	2100	4560
	HIGH			2270	4250	2270	4250
121	LOW	3000	5000	2100	5470	2100	5470
	MED			2620	5670	2620	5670
	HIGH			2650	5290	2650	5290
150	LOW	3600	6000	2100	6830	2100	6830
	MED			2620	6800	2620	6800
	HIGH			2650	7410	2650	7410
180	LOW	4500	7500	2450	7500	2450	9000
	MED			3000	6750	3000	9000
	HIGH			3990	7200	3990	7410

Table 8 – PHYSICAL DATA (COOLING) 3 – 4 TONS

	036 Produced On or Prior to 7/26/2015	036 Produced On or After 7/27/2015	048 Produced On or Prior to 7/26/2015	048 Produced On or After 7/27/2015
Refrigeration System				
# Circuits / # Comp. / Type	1 / 1 / Scroll	1 / 1 / Scroll	1 / 1 / Scroll	1 / 1 / Scroll
R–410A refrig. (R–410A) (lbs–oz)	5–10	4–4	7–5	7–5
Hot Gas Re–Heat R–410A refrig. charge A/B (lbs – oz)	–	–	–	–
Metering Device	Acutrol	Acutrol	Acutrol	Acutrol
Hot Gas Re–Heat R–410A Metering Device	–	–	–	–
High–press. Trip / Reset (psig)	630 / 505	630 / 505	630 / 505	630 / 505
Low–press. Trip / Reset (psig)	54 / 117	54 / 117	54 / 117	54 / 117
Compressor Capacity Staging (%)	100%	100%	100%	100%
Evap. Coil				
Material (Tube/Fin)	Cu / Al	Cu / Al	Cu / Al	Cu / Al
Coil type	3/8–in RTPF	3/8–in RTPF	3/8–in RTPF	3/8–in RTPF
Rows / FPI	2 / 15	2 / 15	2 / 15	2 / 15
Total Face Area (ft^2)	5.5	5.5	5.5	5.5
Condensate Drain Conn. Size	3/4–in	3/4–in	3/4–in	3/4–in
Hot Gas Re–Heat Coil				
Material (Tube/Fin)	–	–	–	–
Coil type	–	–	–	–
Rows / FPI	–	–	–	–
Total Face Area (ft^2)	–	–	–	–
Evap. Fan and Motor				
Standard Direct Drive 3 phase				
Motor Qty / Drive Type	–	1 / Direct	–	1 / Direct
Max BHP	–	0.75	–	0.75
RPM Range	–	600–1200	–	600–1200
Motor Frame Size	–	48	–	48
Fan Qty / Type	–	1 / Centrifugal	–	1 / Centrifugal
Fan Diameter (in)	–	10 x 11	–	10 x 11
Standard Static 3 phase				
Motor Qty / Drive Type	1 / Belt	1 / Belt	1 / Belt	1 / Belt
Max BHP	1.7	1.7	1.7	1.7
RPM Range	560–854	560–854	560–854	560–854
Motor Frame Size	48	48	48	48
Fan Qty / Type	1 / Centrifugal	1 / Centrifugal	1 / Centrifugal	1 / Centrifugal
Fan Diameter (in)	10 x 10	10 x 10	10 x 10	10 x 10
Medium Static 3 phase				
Motor Qty / Drive Type	1 / Belt	1 / Belt	1 / Belt	1 / Belt
Max BHP	1.7	1.7	1.7	1.7
RPM Range	770–1175	770–1175	770–1175	770–1175
Motor Frame Size	48	48	48	48
Fan Qty / Type	1 / Centrifugal	1 / Centrifugal	1 / Centrifugal	1 / Centrifugal
Fan Diameter (in)	10 x 10	10 x 10	10 x 10	10 x 10
High Static 3 phase				
Motor Qty / Drive Type	1 / Belt	1 / Belt	1 / Belt	1 / Belt
Max BHP	2.4	2.4	2.4	2.4
RPM Range	1035–1466	1035–1466	1035–1466	1035–1466
Motor Frame Size	56	56	56	56
Fan Qty / Type	1 / Centrifugal	1 / Centrifugal	1 / Centrifugal	1 / Centrifugal
Fan Diameter (in)	10 x 10	10 x 10	10 x 10	10 x 10
Cond. Coil				
Material (Tube/Fin)	Cu / Al	Cu / Al	Cu / Al	Cu / Al
Coil type	3/8–in RTPF	5/16–in RTPF	3/8–in RTPF	5/16–in RTPF
Rows / FPI	1 / 17	1 / 17	2 / 17	2 / 17
Total Face Area (ft^2)	14.6	12.6	16.5	15.6
Cond. fan / motor				
Qty / Motor Drive Type	1/ Direct	1/ Direct	1/ Direct	1/ Direct
Motor HP / RPM	1/4 / 1100	1/4 / 1100	1/4 / 1100	1/4 / 1100
Fan diameter (in)	22	22	22	22
Filters				
RA Filter # / Size (in)	2 / 16 x 25 x 2	2 / 16 x 25 x 2	2 / 16 x 25 x 2	2 / 16 x 25 x 2
OA inlet screen # / Size (in)	1 / 20 x 24 x 1	1 / 20 x 24 x 1	1 / 20 x 24 x 1	1 / 20 x 24 x 1

NOTE: Hot Gas Re–Heat is no longer available on 036–072 models.

– Not applicable

	060 Produced On or Prior to 7/26/2015	060 Produced On or After 7/27/2015	072
Refrigeration System			
# Circuits / # Comp. / Type	1 / 1 / Scroll	1 / 1 / Scroll	1 / 1 / Scroll
R–410A refrig. (lbs–oz)	10–11	9–0	14–2
Hot Gas Re–Heat R–410A refrig. charge A/B (lbs – oz)	16–0	–	22–5
Metering Device	Acutrol	Acutrol	Acutrol
Hot Gas Re–Heat Metering Device	–	–	Acutrol + TXV
High–press. Trip / Reset (psig)	630 / 505	630 / 505	630 / 505
Low–press. Trip / Reset (psig)	54 / 117	54 / 117	54 / 117
Compressor Capacity Staging (%)	100%	100%	100%
Evap. Coil			
Material (Tube/Fin)	Cu / Al	Cu / Al	Cu / Al
Coil type	3/8–in RTPF	3/8–in RTPF	3/8–in RTPF
Rows / FPI	4 / 15	4 / 15	4 / 15
Total Face Area (ft^2)	5.5	5.5	7.3
Condensate Drain Conn. Size	3/4–in	3/4–in	3/4–in
Perfect Humidity Coil			
Material (Tube/Fin)	–	–	Cu / Al
Coil type	–	–	3/8–in RTPF
Rows..Fins/in.	–	–	2 / 17
Total Face Area (ft^2)	–	–	5.2
Evap. Fan and Motor			
Standard Direct Drive 3 phase			
Motor Qty / Drive Type	–	1 / Direct	–
Max BHP	–	1	–
RPM Range	–	600–1200	–
Motor Frame Size	–	48	–
Fan Qty / Type	–	1 / Centrifugal	–
Fan Diameter (in)	–	10 x 11	–
Standard Static 3 phase			
Motor Qty / Drive Type	1 / Belt	1 / Belt	1 / Belt
Max BHP	1.7	1.7	2.4
RPM Range	770–1175	770–1175	1073–1457
Motor Frame Size	48	48	56
Fan Qty / Type	1 / Centrifugal	1 / Centrifugal	1 / Centrifugal
Fan Diameter (in)	10 x 10	10 x 10	10 x 10
Medium Static 3 phase			
Motor Qty / Drive Type	1 / Belt	1 / Belt	1 / Belt
Max BHP	2.4	2.4	2.9†
RPM Range	1035–1466	1035–1466	1173–1518
Motor Frame Size	56	56	56
Fan Qty / Type	1 / Centrifugal	1 / Centrifugal	1 / Centrifugal
Fan Diameter (in)	10 x 10	10 x 10	10 x 10
High Statoc 3 phase			
Motor Qty / Drive Type	1 / Belt	1 / Belt	1 / Belt
Max BHP	2.9	2.9	3.7
RPM Range	1303–1687	1303–1687	1474–1788
Motor Frame Size	56	56	56
Fan Qty / Type	1 / Centrifugal	1 / Centrifugal	1 / Centrifugal
Fan Diameter (in)	10 x 10	10 x 10	10 x 10
Cond. Coil			
Material (Tube/Fin)	Cu / Al	Cu / Al	Cu / Al
Coil type	3/8–in RTPF	5/16–in RTPF	3/8–in RTPF
Rows / FPI	2 / 17	2 / 17	2 / 17
Total Face Area (ft^2)	16.5	15.6	21.3
Cond. fan / motor			
Qty / Motor Drive Type	1/ Direct	1/ Direct	1/ Direct
Motor HP / RPM	1/4 / 1100	1/4 / 1100	1/4 / 1100
Fan diameter (in)	22	22	22
Filters			
RA Filter # / Size (in)	2 / 16 x 25 x 2	2 / 16 x 25 x 2	4 / 16 x 16 x 2
OA inlet screen # / Size (in)	1 / 20 x 24 x 1	1 / 20 x 24 x 1	1 / 20 x 24 x 1

NOTE: Hot Gas Re–Heat is no longer available on 036–072 models.
– Not applicable
* 575V motor utilizes 3.7 BHP

	036	048	060	072
Gas Connection				
# of Gas Valves	1	1	1	1
Nat. gas supply line press (in. w.g.)/ (PSIG)	4 –13 / 0.18 – 0.47	4 –13 / 0.18 – 0.47	4 –13 / 0.18 – 0.47	4 –13 / 0.18 – 0.47
LP supply line press (in. w.g.) / (PSIG)	11 –13 / 0.40 – 0.47	11 –13 / 0.40 – 0.47	11 –13 / 0.40 – 0.47	11 –13 / 0.40 – 0.47
Heat Anticipator setting (Amps)				
1st stage	0.14	0.14	0.14	0.14
2nd stage	0.14	0.14	0.14	0.14
Natural Gas Heat				
LOW				
# of stages / # of burners (total)	1 / 2	1 / 2	1 / 2	1 / 2
Connection Size	1/2–in NPT	1/2–in NPT	1/2–in NPT	1/2–in NPT
Rollout switch opens / closes	195 / 115	195 / 115	195 / 115	195 / 115
Temperature Rise	25 – 55	25 – 55	20 – 55	15 – 55
MED				
# of stages / # of burners (total)	1 or 2 / 3	1 / 3	1 / 3	1 / 3
Connection Size	1/2–in NPT	1/2–in NPT	1/2–in NPT	1/2–in NPT
Rollout switch opens / closes	195 / 115	195 / 115	195 / 115	195 / 115
Temperature Rise	55 – 85	35 – 65	30 – 65	25 – 65
HIGH				
# of stages / # of burners (total)	–	1 or 2 / 3	1 or 2 / 3	2 / 3
Connection Size	–	1/2–in NPT	1/2–in NPT	1/2–in NPT
Rollout switch opens / closes	–	195 / 115	195 / 115	195 / 115
Temperature Rise	–	50 – 80	40 – 80	35 – 80
Liquid Propane Heat				
LOW				
# of stages / # of burners (total)	1 / 2	1 / 2	1 / 2	1 / 2
Connection Size	1/2–in NPT	1/2–in NPT	1/2–in NPT	1/2–in NPT
Rollout switch opens / closes	195 / 115	195 / 115	195 / 115	195 / 115
Temperature Rise	25 – 55	25 – 55	20 – 55	15 – 55
MED				
# of stages / # of burners (total)	1 or 2 / 3	1 / 3	1 / 3	1 / 3
Connection Size	1/2–in NPT	1/2–in NPT	1/2–in NPT	1/2–in NPT
Rollout switch opens / closes	195 / 115	195 / 115	195 / 115	195 / 115
Temperature Rise	55 – 85	35 – 65	30 – 65	25 – 65
HIGH				
# of stages / # of burners (total)	–	1 or 2 / 3	1 or 2 / 3	2 / 3
Connection Size	–	1/2–in NPT	1/2–in NPT	1/2–in NPT
Rollout switch opens / closes	–	195 / 115	195 / 115	195 / 115
Temperature Rise	–	50 – 80	40 – 80	35 – 80
Low NOx Gas Heat				
LOW				
# of stages / # of burners (total)	1 / 2	1 / 2	1 / 2	–
Connection Size	1/2–in NPT	1/2–in NPT	1/2–in NPT	–
Rollout switch opens / closes	195 / 115	195 / 115	195 / 115	–
Temperature Rise	20 – 50	20 – 50	15 – 50	–
MED				
# of stages / # of burners (total)	1 / 3	1 / 3	1 / 3	–
Connection Size	1/2–in NPT	1/2–in NPT	1/2–in NPT	–
Rollout switch opens / closes	195 / 115	195 / 115	195 / 115	–
Temperature Rise	30 – 60	30 – 60	25 – 60	–
HIGH				
# of stages / # of burners (total)	–	1 / 3	1 / 3	–
Connection Size	–	1/2–in NPT	1/2–in NPT	–
Rollout switch opens / closes	–	195 / 115	195 / 115	–
Temperature Rise	–	40 – 70	35 – 70	–

– Not applicable

Table 11 – PHYSICAL DATA (COOLING) 7.5 – 8.5 TONS

	091	090	101	102
Refrigeration System				
# Circuits / # Comp. / Type	1 / 1 / Scroll	2 / 2 / Scroll	1 / 1 / Scroll	2 / 2 / Scroll
RTPF models R–410A charge A/B (lbs – oz)	13 – 12	8 – 5 / 8 – 2	15 – 4	10 – 5 / 10 – 12
Alternate (Hot Gas Re–Heat) R–410A charge A/B (lbs – oz)		13 – 3 / 13 – 3		16 – 13 / 16 – 13
Metering device	Acutrol	Acutrol	Acutrol	Acutrol
Alternate (Hot Gas Re–Heat) Metering device	–	Acutrol + TXV	–	Acutrol + TXV
High–press. Trip / Reset (psig)	630 / 505	630 / 505	630 / 505	630 / 505
Low–press. Trip / Reset (psig)	54 / 117	54 / 117	54 / 117	54 / 117
Compressor Capacity Staging (%)	100%	50% / 100%	100%	50% / 100%
Evap. Coil				
Material	Cu / Al	Cu / Al	Cu / Al	Cu / Al
Coil type	3/8–in RTPF	3/8–in RTPF	3/8–in RTPF	3/8–in RTPF
Rows / FPI	3 / 15	3 / 15	3 / 15	3 / 15
Total face area (ft^2)	8.9	8.9	11.1	11.1
Condensate drain conn. size	3/4–in	3/4–in	3/4–in	3/4–in
Hot Gas Re–Heat Coil				
Material	–	Cu / Al	–	Cu / Al
Coil type	–	3/8–in RTPF	–	3/8–in RTPF
Rows / FPI	–	2 / 17	–	2 / 17
Total face area (ft^2)	–	6.3	–	8.4
Evap. fan and motor				
Standard Static 3 phase				
Motor Qty / Drive Type	1 / Belt	1 / Belt	1 / Belt	1 / Belt
Max BHP	1.7	1.7	1.7	1.7
RPM range	489–747	489–747	518–733	518–733
Motor frame size	56	56	56	56
Fan Qty / Type	1 / Centrifugal	1 / Centrifugal	1 / Centrifugal	1 / Centrifugal
Fan Diameter (in)	15 x 15	15 x 15	15 x 15	15 x 15
Medium Static 3 phase				
Motor Qty / Drive type	1 / Belt	1 / Belt	1 / Belt	1 / Belt
Max BHP	2.9*	2.9*	2.4	2.4
RPM range	733–949	733–949	690–936	690–936
Motor frame size	56	56	56	56
Fan Qty / Type	1 / Centrifugal	1 / Centrifugal	1 / Centrifugal	1 / Centrifugal
Fan Diameter (in)	15 x 15	15 x 15	15 x 15	15 x 15
High Static 3 phase				
Motor Qty / Drive type	1 / Belt	1 / Belt	1 / Belt	1 / Belt
Max BHP	4.7	4.7	3.7	3.7
RPM range	909–1102	909–1102	838–1084	838–1084
Motor frame size	14	14	56	56
Fan Qty / Type	1 / Centrifugal	1 / Centrifugal	1 / Centrifugal	1 / Centrifugal
Fan Diameter (in)	15 x 15	15 x 15	15 x 15	15 x 15
Cond. Coil				
Material	Cu / Al	Cu / Al	Cu / Al	Cu / Al
Coil type	3/8–in RTPF	3/8–in RTPF	3/8–in RTPF	3/8–in RTPF
Rows / FPI	2 / 17	2 / 17	2 / 17	2 / 17
Total face area (ft2)	20.5	20.5	21.4	25.1
Cond. fan / motor				
Qty / Motor drive type	2 / direct	2 / direct	2 / direct	2 / direct
Motor HP / RPM	1/4 / 1100	1/4 / 1100	1/4 / 1100	1/4 / 1100
Fan diameter (in)	22	22	22	22
Filters				
RA Filter # / Size (in)	4 / 16 x 20 x 2	4 / 16 x 20 x 2	4 / 20 x 20 x 2	4 / 20 x 20 x 2
OA inlet screen # / Size (in)	1 / 20 x 24 x 1	1 / 20 x 24 x 1	1 / 20 x 24 x 1	1 / 20 x 24 x 1

NOTE: Hot Gas Re–Heat is available with only Round Tube / Plate Fin (RTPF).

* 575V motor utilizes 3.7 BHP

– Not applicable

Table 12 – PHYSICAL DATA (COOLING) 10 – 15 TONS

	121	120	150	180
Refrigeration System				
# Circuits / # Comp. / Type	1 / 1 / Scroll	2 / 2 / Scroll	2 / 2 / Scroll	2 / 2 / Scroll
RTPF models R–410A charge A/B (lbs – oz)	20 – 0	10 – 5 / 10 – 3	11 – 0 / 11 – 6	15–14/16–12
Alternate (Hot Gas Re–Heat) R–410A charge A/B (lbs – oz)	–	16 – 10 / 16 – 0	17 – 10 / 18 – 3	–
Metering device	Acutrol	Acutrol	Acutrol	Acutrol
Alternate (Hot Gas Re–Heat) Metering device	–	Acutrol + TXV	Acutrol + TXV	–
High–press. Trip / Reset (psig)	630 / 505	630 / 505	630 / 505	630 / 505
Low–press. Trip / Reset (psig)	54 / 117	54 / 117	54 / 117	54 / 117
Compressor Capacity Staging (%)	100%	50% / 100%	50% / 100%	50% / 100%
Evap. Coil				
Material	Cu / Al	Cu / Al	Cu / Al	Cu / Al
Coil type	3/8–in RTPF	3/8–in RTPF	3/8–in RTPF	3/8–in RTPF
Rows / FPI	4 / 15	4 / 15	4 / 15	3 / 15
Total face area (ft^2)	11.1	11.1	11.1	17.5
Condensate drain conn. size	3/4–in	3/4–in	3/4–in	3/4–in
Hot Gas Re–Heat Coil				
Material	–	Cu / Al	Cu / Al	Cu / Al
Coil type	–	3/8–in RTPF	3/8–in RTPF	3/8–in RTPF
Rows / FPI	–	2 / 17	2 / 17	1 / 17
Total face area (ft^2)	–	8.4	8.4	13.8
Evap. fan and motor				
Standard Static 3 phase				
Motor Qty / Drive type	1 / Belt	1 / Belt	1 / Belt	1 / Belt
Max BHP	2.4	2.4	2.9*	2.9*
RPM range	591–838	591–838	652–843	507–676
Motor frame size	56	56	56	56
Fan Qty / Type	1 / Centrifugal	1 / Centrifugal	1 / Centrifugal	1 / Centrifugal
Fan Diameter (in)	15 x 15	15 x 15	15 x 15	18 x 18
Medium Static 3 phase				
Motor Qty / Drive type	1 / Belt	1 / Belt	1 / Belt	1 / Belt
Max BHP	3.7	3.7	3.7	3.7
RPM range	838–1084	838–1084	838–1084	627–851
Motor frame size	56	56	56	56
Fan Qty / Type	1 / Centrifugal	1 / Centrifugal	1 / Centrifugal	1 / Centrifugal
Fan Diameter (in)	15 x 15	15 x 15	15 x 15	18 x 18
High Static 3 phase				
Motor Qty / Drive type	1 / Belt	1 / Belt	1 / Belt	1 / Belt
Max BHP	4.7	4.7	4.7	6.5 / 6.9 / 7.0 / 8.3 ‡
RPM range	1022–1240	1022–1240	1022–1240	776–955
Motor frame size	14	14	14	S184T
Fan Qty / Type	1 / Centrifugal	1 / Centrifugal	1 / Centrifugal	1 / Centrifugal
Fan Diameter (in)	15 x 15	15 x 15	15 x 15	18 x 18
Cond. Coil				
Material	Cu / Al	Cu / Al	Cu / Al	Cu / Al
Coil type	3/8–in RTPF	3/8–in RTPF	3/8–in RTPF	3/8–in RTPF
Rows / FPI	2 / 17	2 / 17	3 / 17	2 / 17
Total face area (ft2)	25.1	25.1	25.1	2 @ 23.1
Cond. fan / motor				
Qty / Motor drive type	2 / direct	2 / direct	1 / direct	3 / direct
Motor HP / RPM	1/4 / 1100	1/4 / 1100	1 / 1175	1/4 / 1100
Fan diameter (in)	22	22	30	22
Filters				
RA Filter # / Size (in)	4 / 20 x 20 x 2	4 / 20 x 20 x 2	4 / 20 x 20 x 2	6 / 18 x 24 x 2 2 / 24 x 27 x 1 (vert.)
OA inlet screen # / Size (in)	1 / 20 x 24 x 1	1 / 20 x 24 x 1	1 / 20 x 24 x 1	1 / 30 x 39 x 1 (horiz)

NOTE: Hot Gas Re–Heat is available with only Round Tube / Plate Fin (RTPF).

* 575V motor utilizes 3.7 BHP

– Not applicable

‡ On Size 16 units, Max BHP for the High Static motor varies with the motor's voltage; see the table below.

Voltage	BHP
208	6.5
230	6.9
460	7.0
575	8.3

Table 13 – PHYSICAL DATA (HEATING) 7.5 – 10 TONS

	090/091	101/102	120/121
Gas Connection			
# of Gas Valves	1	1	1
Nat. gas supply line press (in. w.g.)/ (PSIG)	4 –13 / 0.18 – 0.47	4 –13 / 0.18 – 0.47	4 –13 / 0.18 – 0.47
LP supply line press (in. w.g.) / (PSIG)	11 –13 / 0.40 – 0.47	11 –13 / 0.40 – 0.47	11 –13 / 0.40 – 0.47
Heat Anticipator setting (Amps)			
1st stage	0.14	0.14	0.14
2nd stage	0.14	0.14	0.14
Natural Gas Heat			
LOW # of stages / # of burners (total)	1 / 3	1 / 3	2 / 4
LOW Connection Size	1/2–in NPT	1/2–in NPT	3/4–in NPT
LOW Rollout switch opens / closes	195 / 115	195 / 115	195 / 115
LOW Temperature Rise	20 – 50	20 – 50	25 – 65
MED # of stages / # of burners (total)	2 / 4	2 / 4	2 / 5
MED Connection Size	3/4–in NPT	3/4–in NPT	3/4–in NPT
MED Rollout switch opens / closes	195 / 115	195 / 115	195 / 115
MED Temperature Rise	35 – 65	30 – 65	30 – 65
HIGH # of stages / # of burners (total)	2 / 5	2 / 5	2 / 5
HIGH Connection Size	3/4–in NPT	3/4–in NPT	3/4–in NPT
HIGH Rollout switch opens / closes	195 / 115	195 / 115	195 / 115
HIGH Temperature Rise	45 – 75	40 – 75	35 – 70
Liquid Propane Heat			
LOW # of stages / # of burners (total)	1 / 3	1 / 3	2 / 4
LOW Connection Size	1/2–in NPT	1/2–in NPT	3/4–in NPT
LOW Rollout switch opens / closes	195 / 115	195 / 115	195 / 115
LOW Temperature Rise	20 – 50	20 – 50	25 – 65
MED # of stages / # of burners (total)	2 / 4	2 / 4	2 / 5
MED Connection Size	3/4–in NPT	3/4–in NPT	3/4–in NPT
MED Rollout switch opens / closes	195 / 115	195 / 115	195 / 115
MED Temperature Rise	35 – 65	30 – 65	30 – 65
HIGH # of stages / # of burners (total)	2 / 5	2 / 5	2 / 5
HIGH Connection Size	3/4–in NPT	3/4–in NPT	3/4–in NPT
HIGH Rollout switch opens / closes	195 / 115	195 / 115	195 / 115
HIGH Temperature Rise	45 – 75	40 – 75	35 – 70
Low NOx Gas Heat			
LOW # of stages / # of burners (total)	–	–	–
LOW Connection Size	–	–	–
LOW Rollout switch opens / closes	–	–	–
LOW Temperature Rise	–	–	–
MED # of stages / # of burners (total)	–	–	–
MED Connection Size	–	–	–
MED Rollout switch opens / closes	–	–	–
MED Temperature Rise	–	–	–
HIGH # of stages / # of burners (total)	–	–	–
HIGH Connection Size	–	–	–
HIGH Rollout switch opens / closes	–	–	–
HIGH Temperature Rise	–	–	–

– Not applicable

	150	180
Gas Connection		
# of Gas Valves	1	1
Nat. gas supply line press (in. w.g.)/ (PSIG)	4 –13 / 0.18 – 0.47	5 – 13 / 0.18 – 0.47
LP supply line press (in. w.g.) / (PSIG)	11 –13 / 0.40 – 0.47	11 –13 / 0.40 – 0.47
Heat Anticipator setting (Amps)		
1st stage	0.14	0.14
2nd stage	0.14	0.14
Natural Gas Heat		
LOW # of stages / # of burners (total)	2 / 4	2 / 6
LOW Connection Size	3/4–in NPT	3/4–in NPT
LOW Rollout switch opens / closes	195 / 115	225 / 145
LOW Temperature Rise	25 – 65	20 – 55
MED # of stages / # of burners (total)	2 / 5	2 / 8
MED Connection Size	3/4–in NPT	3/4–in NPT
MED Rollout switch opens / closes	195 / 115	225 / 145
MED Temperature Rise	30 – 65	25 – 60
HIGH # of stages / # of burners (total)	2 / 5	2 / 10
HIGH Connection Size	3/4–in NPT	3/4–in NPT
HIGH Rollout switch opens / closes	195 / 115	225 / 145
HIGH Temperature Rise	35 – 70	35 – 65
Liquid Propane Heat		
LOW # of stages / # of burners (total)	2 / 4	2 / 6
LOW Connection Size	3/4–in NPT	3/4–in NPT
LOW Rollout switch opens / closes	195 / 115	225 / 145
LOW Temperature Rise	25 – 65	20 – 55
MED # of stages / # of burners (total)	2 / 5	2 / 8
MED Connection Size	3/4–in NPT	3/4–in NPT
MED Rollout switch opens / closes	195 / 115	225 / 145
MED Temperature Rise	30 – 65	25 – 60
HIGH # of stages / # of burners (total)	2 / 5	2 / 10
HIGH Connection Size	3/4–in NPT	3/4–in NPT
HIGH Rollout switch opens / closes	195 / 115	225 / 145
HIGH Temperature Rise	35 – 70	35 – 65
Low NOx Gas Heat		
LOW # of stages / # of burners (total)	–	–
LOW Connection Size	–	–
LOW Rollout switch opens / closes	–	–
LOW Temperature Rise	–	–
MED # of stages / # of burners (total)	–	–
MED Connection Size	–	–
MED Rollout switch opens / closes	–	–
MED Temperature Rise	–	–
HIGH # of stages / # of burners (total)	–	–
HIGH Connection Size	–	–
HIGH Rollout switch opens / closes	–	–
HIGH Temperature Rise	–	–

– Not applicable

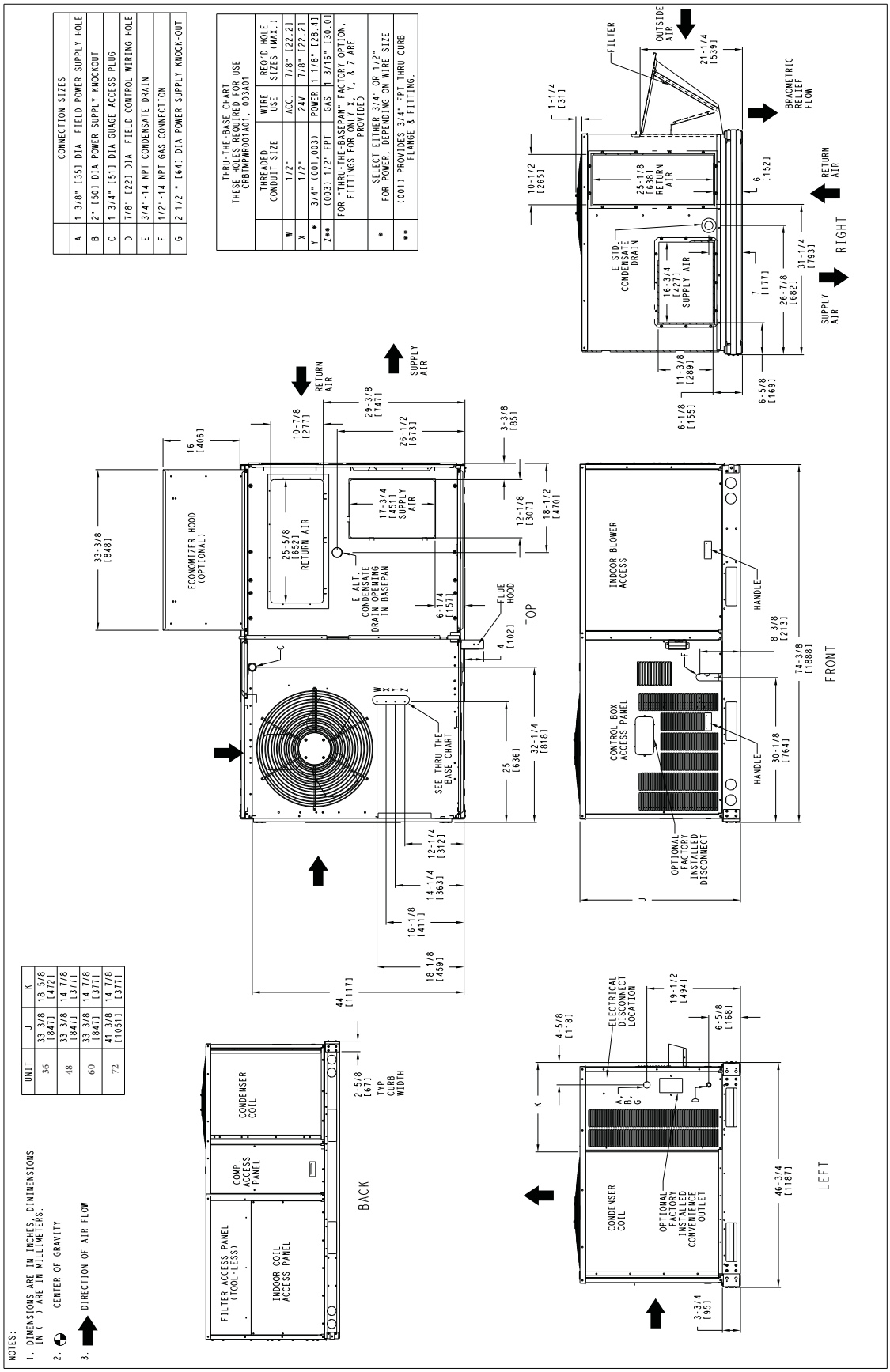

A150292

Fig. 1 – Dimensions RGS036–72

UNIT	STD. UNIT WEIGHT*		CORNER WEIGHT (A)		CORNER WEIGHT (B)		CORNER WEIGHT (C)		CORNER WEIGHT (D)		C.G.		HEIGHT
	LBS.	KG.	LBS.	KG.	LBS.	KG.	LBS.	KG.	LBS.	KG.	X	Y	Z
36	480	218	102	46	117	53	139	63	122	55	39 [991]	25 [635]	16 3/8 [416]
48	528	239	127	58	125	57	137	62	139	63	37 [940]	24 [610]	17 [432]
60	560	254	126	57	136	62	155	70	144	65	38 [965]	24 [610]	17 1/4 [438]
72	652	296	150	68	169	76	176	80	157	71	39 [991]	23 [584]	20 1/8 [511]

* STANDARD UNIT WEIGHT IS WITH LOW GAS HEAT AND WITHOUT PACKAGING.
FOR OTHER OPTIONS AND ACCESSORIES, REFER TO THE PRODUCT DATA CATALOG.

A150293

Fig. 2 – Dimensions RGS036–072

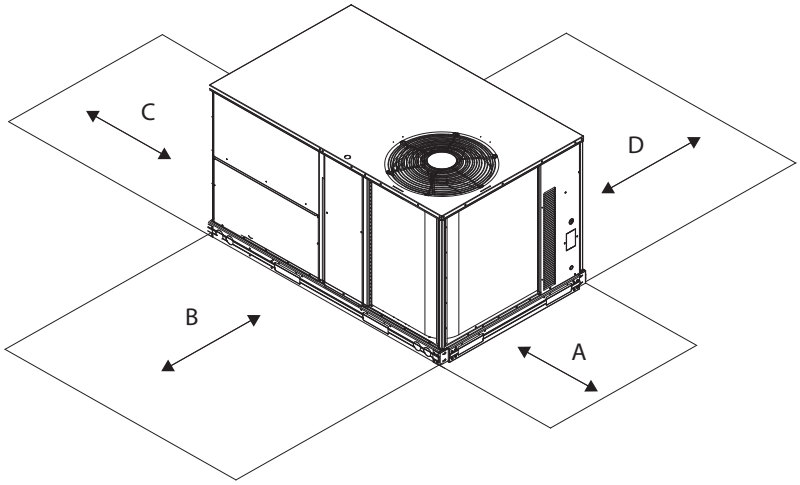

C08337

Fig. 3 – Service Clearance

LOC	DIMENSION	CONDITION
A	48–in (1219 mm)	Unit disconnect is mounted on panel
	18–in (457 mm)	No disconnect, convenience outlet option
	18–in (457 mm)	Recommended service clearance
	12–in (305 mm)	Minimum clearance
B	42–in (1067 mm)	Surface behind servicer is grounded (e.g., metal, masonry wall)
	36–in (914 mm)	Surface behind servicer is electrically non–conductive (e.g., wood, fiberglass)
	Special	Check for sources of flue products within 10–ft of unit fresh air intake hood
C	36–in (914 mm)	Side condensate drain is used
	18–in (457 mm)	Minimum clearance
D	48–in (1219 mm)	No flue discharge accessory installed, surface is combustible material
	42–in (1067 mm)	Surface behind servicer is grounded (e.g., metal, masonry wall, another unit)
	36–in (914 mm)	Surface behind servicer is electrically non–conductive (e.g., wood, fiberglass)
	Special	Check for adjacent units or building fresh air intakes within 10–ft of this unit's flue outlet

NOTE: Unit not designed to have overhead obstruction. Contact Application Engineering for guidance on any application planning overhead obstruction or vertical clearances.

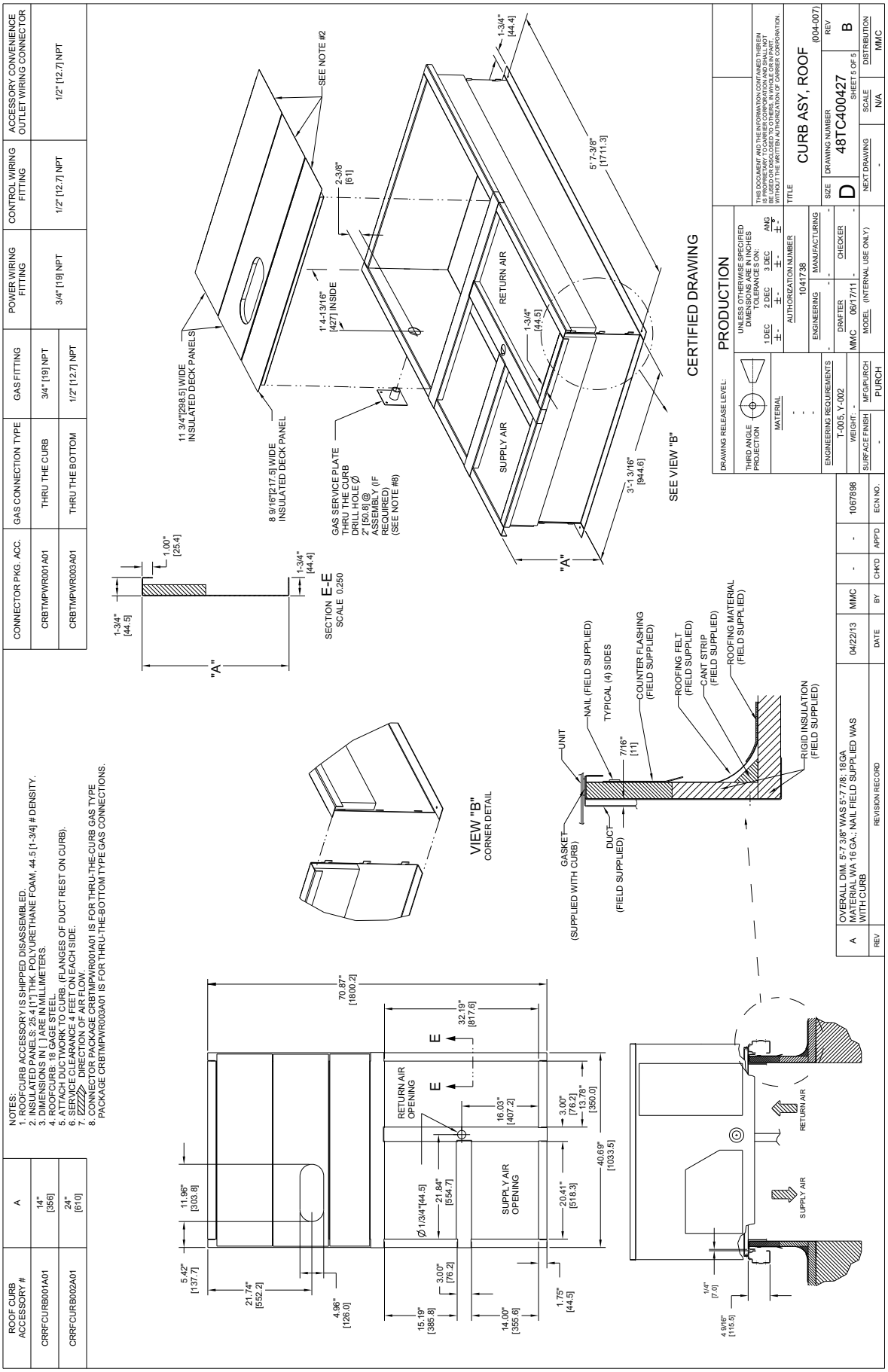

C13310

Fig. 4 – Roof Curb Details – RGS036–072

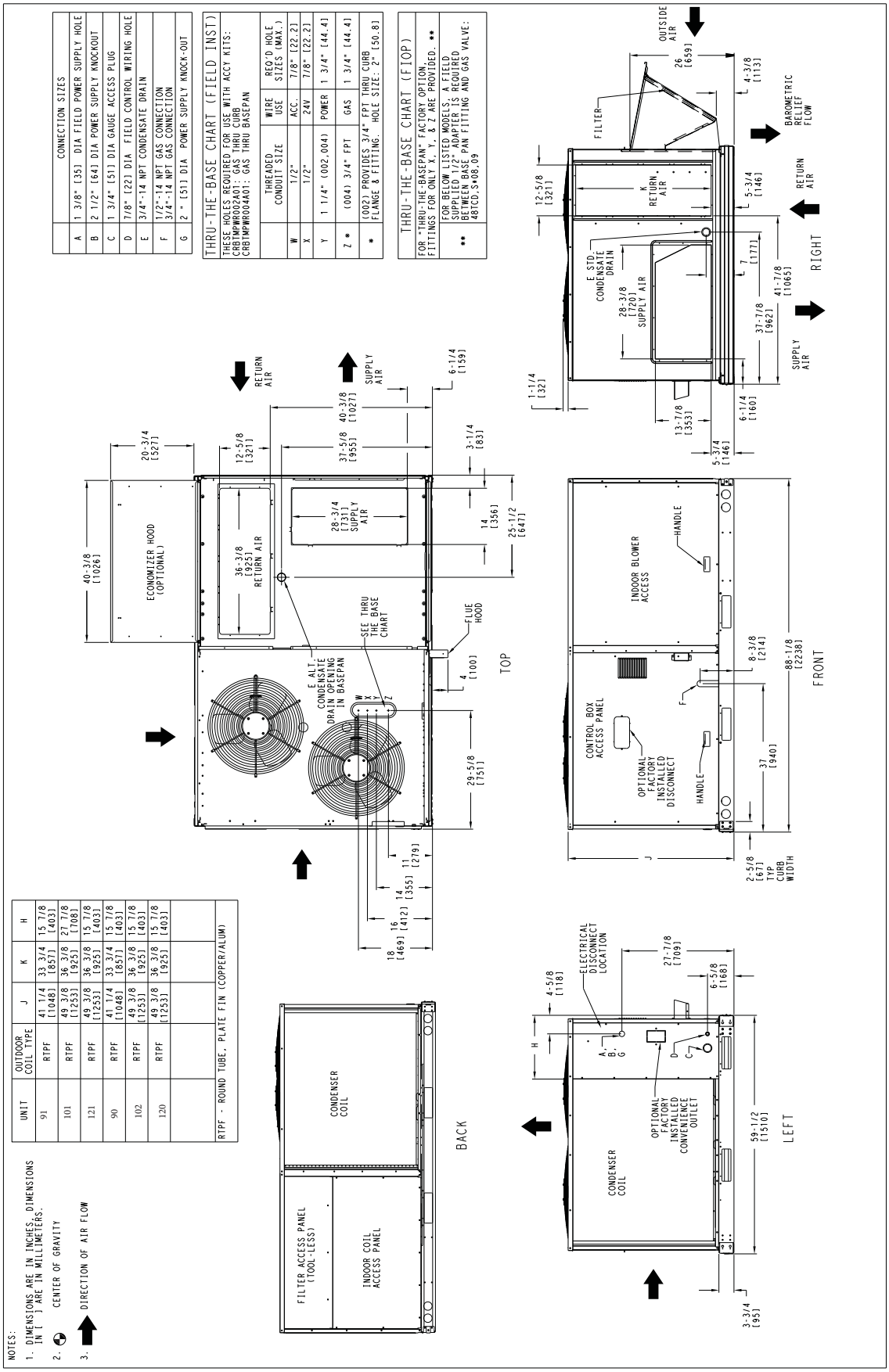

A150295

Fig. 5 – Dimensions RGS090 – 121

UNIT	OUTDOOR COIL TYPE	STD. UNIT WEIGHT		CORNER WEIGHT (A)		CORNER WEIGHT (B)		CORNER WEIGHT (C)		CORNER WEIGHT (D)		C.G.		
		LBS.	KG.	LBS.	KG.	LBS.	KG.	LBS.	KG.	LBS.	KG.	X	Y	Z
RGS091	RTPF	780	354	178	81	158	72	209	95	236	107	41 1/2 [1054]	33 7/8 [860]	20 1/2 [521]
RGS101	RTPF	920	418	212	96	183	83	243	110	282	128	40 7/8 [1038]	34 [864]	23 1/8 [587]
RGS121	RTPF	930	422	216	98	196	89	247	112	272	123.5	42 [1067]	33 1/8 [841]	24 1/4 [616]
RGS090	RTPF	835	379	164	74.5	170	77.2	255	115.8	246	111.7	44 7/8 [1140]	35 5/8 [905]	19 3/8 [492]
RGS102	RTPF	930	422	228	103.5	187	85	232	105.3	283	128.5	39 3/4 [1010]	32 7/8 [835]	18 5/8 [473]
RGS120	RTPF	940	427	231	104.9	189	85.8	234	106.2	286	129.8	39 3/4 [1010]	33 [838]	18 1/2 [470]

RTPF - ROUND TUBE, PLATE FIN (COPPER/ALUM)

*** STANDARD UNIT WEIGHT IS WITH LOW GAS HEAT AND WITHOUT PACKAGING. FOR OTHER OPTIONS AND ACCESSORIES, REFER TO THE PRODUCT DATA CATALOG.

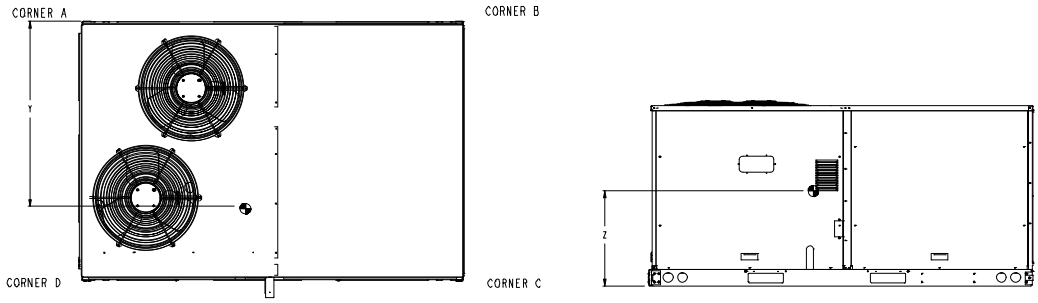

C10299B

Fig. 6 – RGS090–121

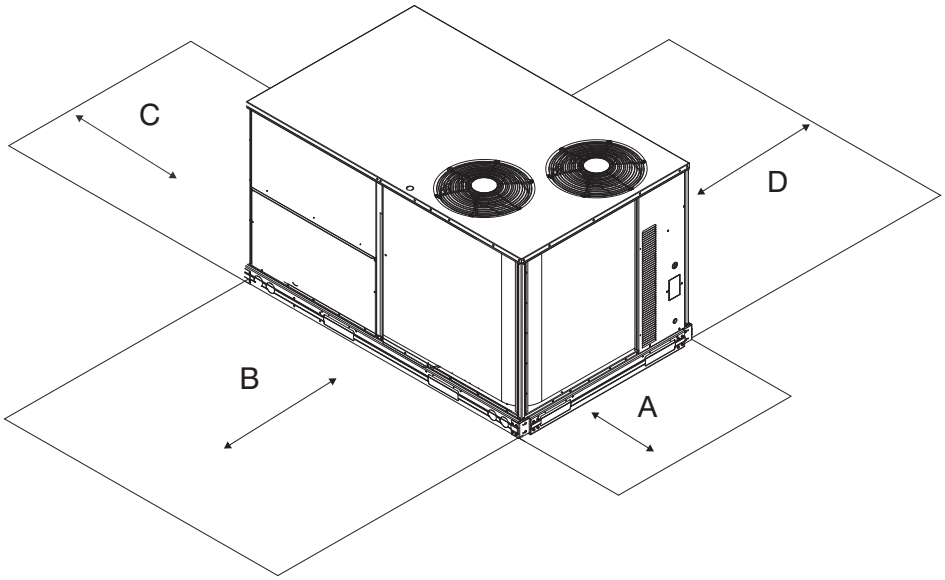

C11247

Fig. 7 – Service Clearance

LOC	DIMENSION	CONDITION
A	48–in (1219 mm)	Unit disconnect is mounted on panel
	36–in (914 mm)	If dimension–B is 12–in (305 mm)
	18–in (457 mm)	No disconnect, convenience outlet option
	18–in (457 mm)	Recommended service clearance (use electric screwdriver)
	12–in (305 mm)	Minimum clearance (use manual ratchet screwdriver)
B	36–in (914 mm)	Unit has economizer
	12–in (305 mm)	If dimension–A is 36–in (914 mm)
	Special	Check for sources of flue products within 10–ft of unit fresh air intake hood
C	36–in (914 mm)	Side condensate drain is used
	18–in (457 mm)	Minimum clearance
D	48–in (1219 mm)	No flue discharge accessory installed, surface is combustible material
	42–in (1067 mm)	Surface behind servicer is grounded (e.g., metal, masonry wall, another unit)
	36–in (914 mm)	Surface behind servicer is electrically non–conductive (e.g., wood, fiberglass)
	Special	Check for adjacent units or building fresh air intakes within 10–ft of this unit's flue outlet

NOTE: Unit not designed to have overhead obstruction. Contact Application Engineering for guidance on any application planning overhead obstruction or vertical clearances.

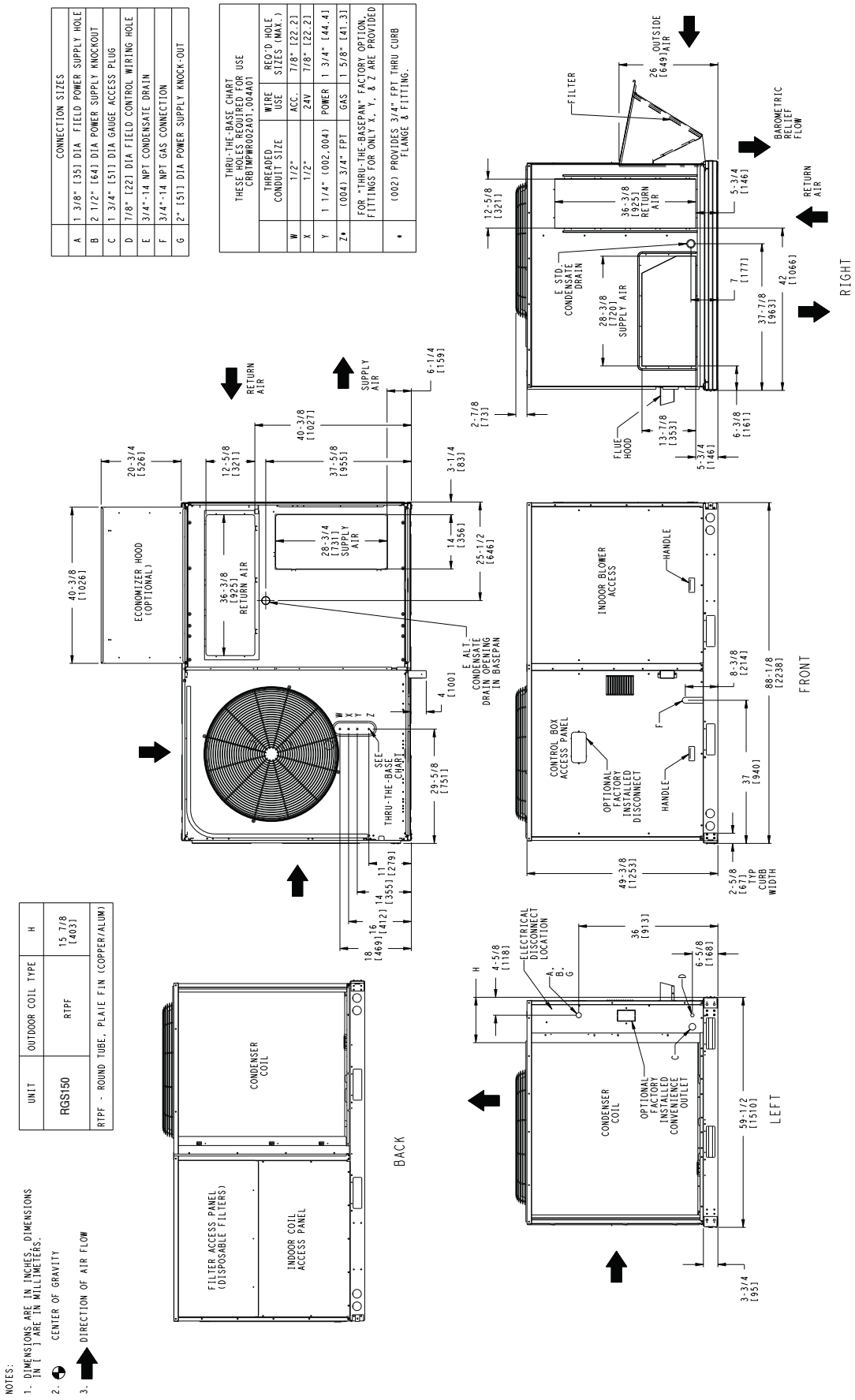

A14149B

Fig. 8 – Dimensions RGS0150

UNIT	OUTDOOR COIL TYPE	STD. UNIT WEIGHT***		CORNER WEIGHT (A)		CORNER WEIGHT (B)		CORNER WEIGHT (C)		CORNER WEIGHT (D)		C.G.		
		LBS.	KG.	LBS.	KG.	LBS.	KG.	LBS.	KG.	LBS.	KG.	X	Y	Z
RGS150	RTPF	1167	530	349	159	167	76	211	96	440	200	31 3/8 [797]	34 3/4 [883]	21 7/8 [556]
RTPF - ROUND TUBE, PLATE FIN (COPPER/ALUM)														

*** STANDARD UNIT WEIGHT IS WITH LOW GAS HEAT AND WITHOUT PACKAGING.
FOR OTHER OPTIONS AND ACCESSORIES, REFER TO THE PRODUCT DATA CATALOG.

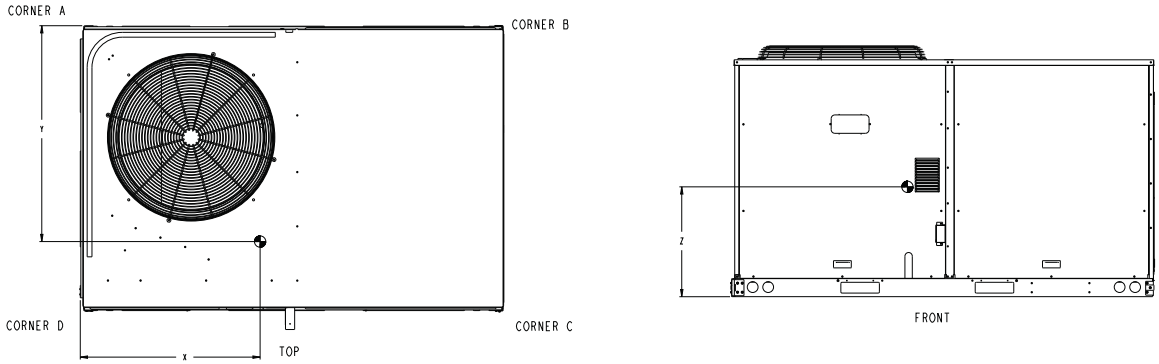

C14150B

Fig. 9 – Dimensions RGS150

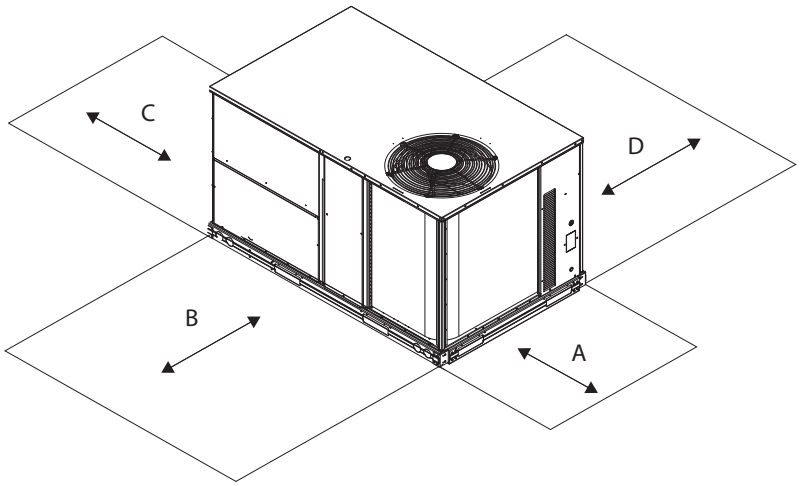

C08337

Fig. 10 – Service Clearance

LOC	DIMENSION	CONDITION
A	48–in (1219 mm)	Unit disconnect is mounted on panel
	36–in (914 mm)	If dimension–B is 12–in (305 mm)
	18–in (457 mm)	No disconnect, convenience outlet option
	18–in (457 mm)	Recommended service clearance (use electric screwdriver)
	12–in (305 mm)	Minimum clearance (use manual ratchet screwdriver)
B	36–in (914 mm)	Unit has economizer
	12–in (305 mm)	If dimension–A is 36–in (914 mm)
	Special	Check for sources of flue products within 10–ft of unit fresh air intake hood
C	36–in (914 mm)	Side condensate drain is used
	18–in (457 mm)	Minimum clearance
D	48–in (1219 mm)	No flue discharge accessory installed, surface is combustible material
	42–in (1067 mm)	Surface behind servicer is grounded (e.g., metal, masonry wall, another unit)
	36–in (914 mm)	Surface behind servicer is electrically non–conductive (e.g., wood, fiberglass)
	Special	Check for adjacent units or building fresh air intakes within 10–ft of this unit's flue outlet

NOTE: Unit not designed to have overhead obstruction. Contact Application Engineering for guidance on any application planning overhead obstruction or vertical clearances.

NOTES:
1. ROOFCURB ACCESSORY IS SHIPPED DISASSEMBLED.
2. INSULATED PANELS: 25.4 [1"] THK. POLYURETHANE FOAM, 44.5 [1-3/4] # DENSITY.
3. DIMENSIONS IN [ ] ARE IN MILLIMETERS.
4. ROOFCURB: 18 GAGE STEEL.
5. ATTACH DUCTWORK TO CURB. (FLANGES OF DUCT REST ON CURB).
6. SERVICE CLEARANCE 4 FEET ON EACH SIDE.
7. ▨ DIRECTION OF AIR FLOW.
8. CONNECTOR PACKAGE CRBTMPWR002A01 IS FOR THRU-THE-CURB GAS TYPE PACKAGE CRBTMPWR004A01 IS FOR THRU-THE-BOTTOM TYPE GAS CONNECTIONS.

ROOF CURB ACCESSORY #	A
CRRFCURB003A01	14" [356]
CRRFCURB004A01	24" [610]

CONNECTOR PKG. ACC.	GAS CONNECTION TYPE	GAS FITTING	POWER WIRING FITTING	CONTROL WIRING FITTING	ACCESSORY CONVENIENCE OUTLET WIRING CONNECTOR
CRBTMPWR002A01	THRU THE CURB	3/4" [19] NPT	1 1/4" [31.7] NPT	1/2" [12.7] NPT	1/2" [12.7] NPT
CRBTMPWR004A01	THRU THE BOTTOM				

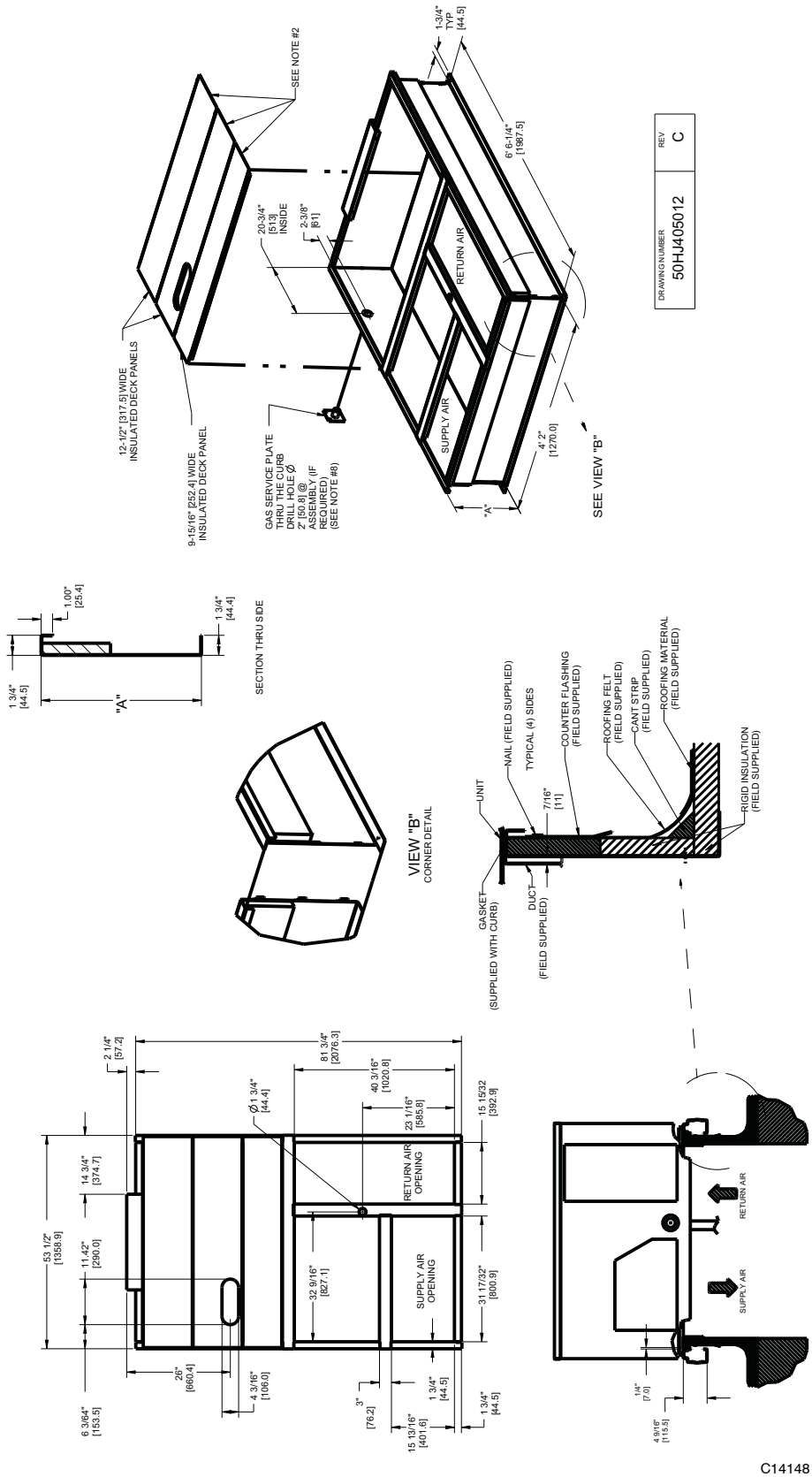

Fig. 11 – Roof Curb Details RGS090–150

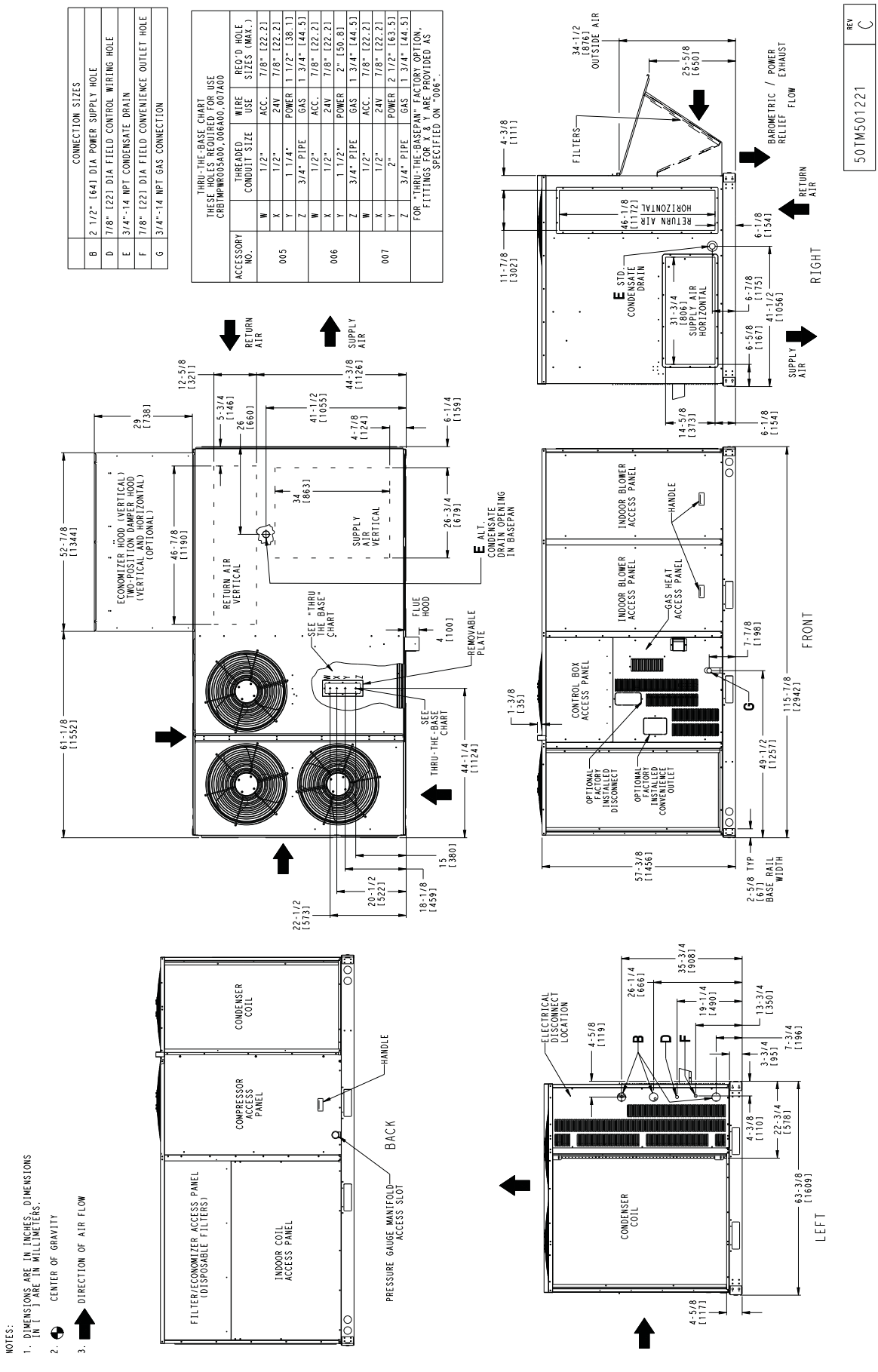

Fig. 12 – Dimensions RGS180

CURBS, WEIGHTS & DIMENSIONS (cont.)

UNIT	STD UNIT WEIGHT		CORNER WEIGHT (A)		CORNER WEIGHT (B)		CORNER WEIGHT (C)		CORNER WEIGHT (D)		C.G.		
	LBS.	KG.	LBS.	KG.	LBS.	KG.	LBS.	KG.	LBS.	KG.	X	Y	Z
RGS180	1380	627	295	134	276	126	342	156	421	191	64 1/4 [1630]	35 [890]	21 1/8 [537]

STANDARD UNIT WEIGHT IS WITH LOW HEAT & WITHOUT PACKAGING.
FOR OPTIONS & ACCESSORIES, REFER TO THE PRODUCT DATA CATALOG.

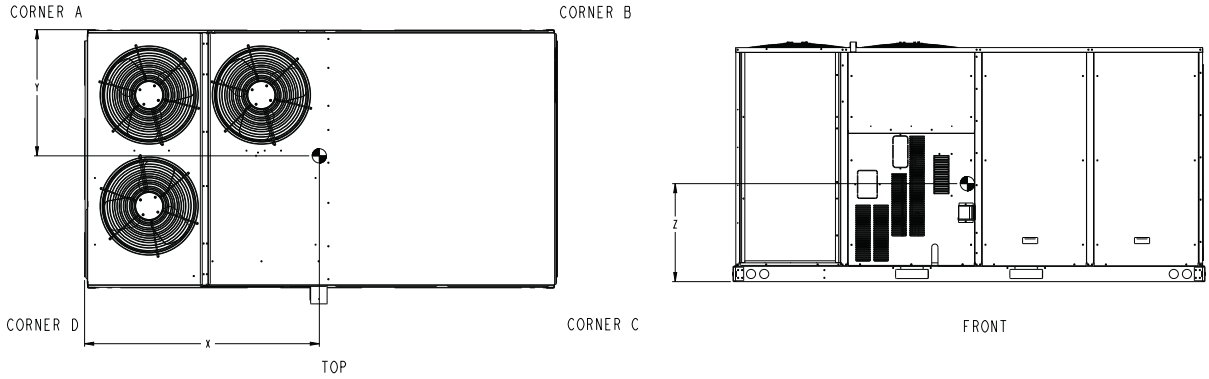

C14152B

Fig. 13 – Dimensions RGS180

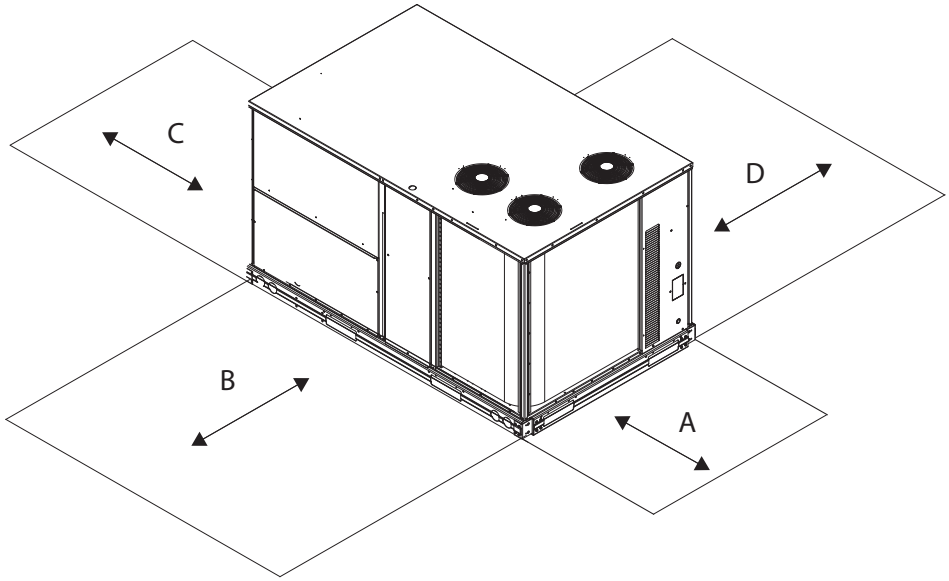

C10578B

Fig. 14 – Service Clearance

LOC	DIMENSION	CONDITION
A	48–in (1219 mm)	Unit disconnect is mounted on panel
	18–in (457 mm)	No disconnect, convenience outlet option
	18–in (457 mm)	Recommended service clearance
	12–in (305 mm)	Minimum clearance
B	42–in (1067 mm)	Surface behind servicer is grounded (e.g., metal, masonry wall)
	36–in (914 mm)	Surface behind servicer is electrically non–conductive (e.g., wood, fiberglass)
	Special	Check for sources of flue products within 10–ft of unit fresh air intake hood
C	36–in (914 mm)	Side condensate drain is used
	18–in (457 mm)	Minimum clearance
D	48–in (1219 mm)	No flue discharge accessory installed, surface is combustible material
	42–in (1067 mm)	Surface behind servicer is grounded (e.g., metal, masonry wall, another unit)
	36–in (914 mm)	Surface behind servicer is electrically non–conductive (e.g., wood, fiberglass)
	Special	Check for adjacent units or building fresh air intakes within 10–ft of this unit's flue outlet

NOTE: Unit not designed to have overhead obstruction. Contact Application Engineering for guidance on any application planning overhead obstruction or vertical clearances.

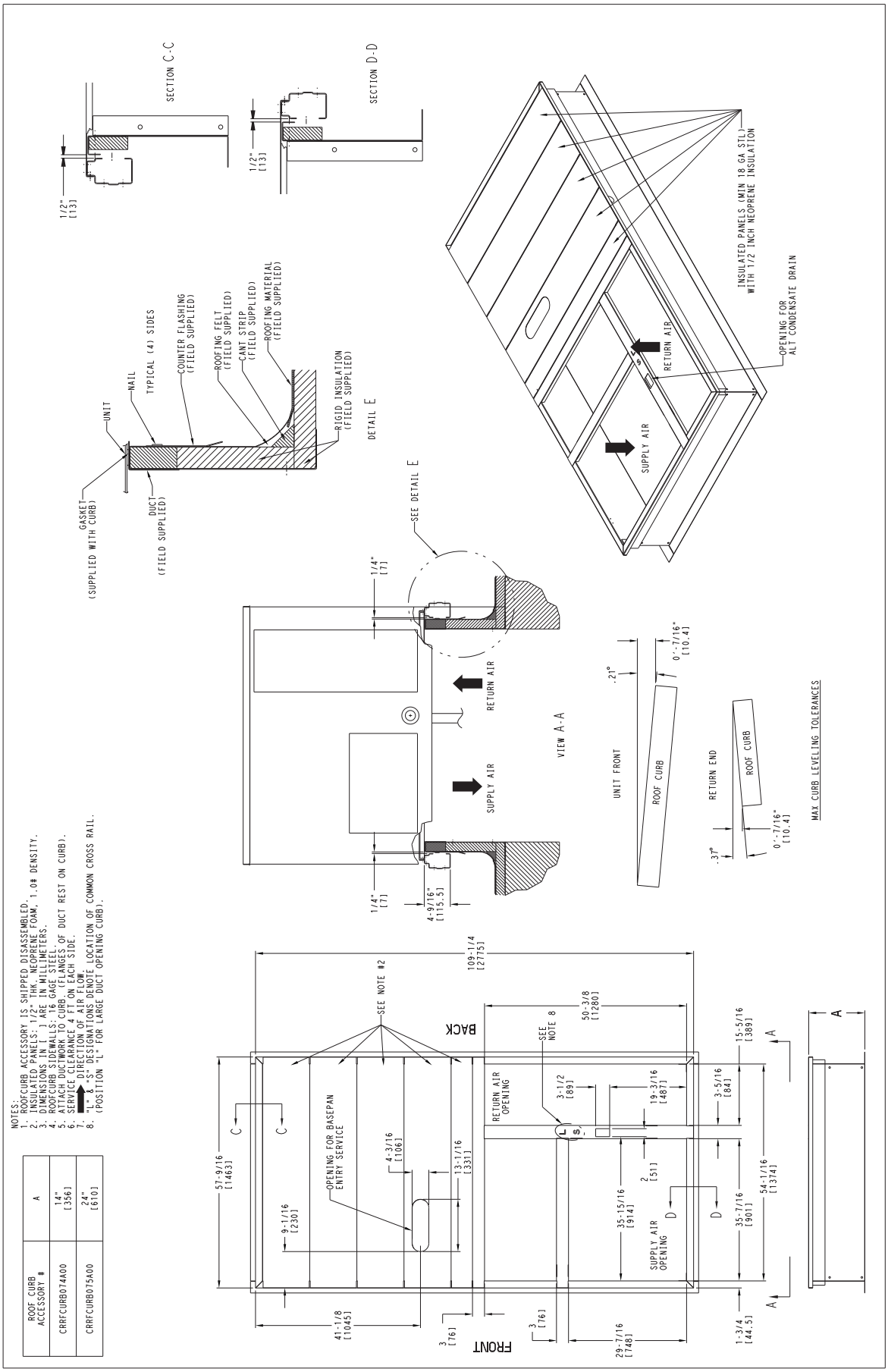

C10772B

Fig. 15 – Roof Curb Details RGS180

Specifications subject to change without notice.

OPTIONS & ACCESSORY WEIGHTS

Option / Accessory	OPTION / ACCESSORY WEIGHTS																	
	036		048		060		072		90/91		101/102		120/121		150		180	
	lb	kg	lb	kg	lb	kg	lb	kg	lb	kg	lb	kg	lb	kg	lb	kg	lb	kg
Hot Gas Re–Heat[1,3]	–	–	–	–	–	–	55	25	80	36	80	36	80	36	85	39	90	41
Power Exhaust – vertical	50	23	50	23	50	23	50	23	74	34	74	34	74	34	74	34	103	47
Power Exhaust – horizontal	30	14	30	14	30	14	30	14	30	14	30	14	30	14	30	14	75	34
EconoMi$er(IV, X or 2)	50	23	50	23	50	23	50	23	74	34	74	34	74	34	74	34	103	47
Two Position damper	39	18	39	18	39	18	39	18	58	26	58	26	58	26	58	26	65	29
Manual Dampers	12	5	12	5	12	5	12	5	18	8	18	8	18	8	18	8	25	11
Medium Gas Heat	12	5	9	4	9	4	9	4	15	7	15	7	18	8	18	8	28	13
High Gas Heat	–	–	17	8	17	8	17	8	29	13	29	13	35	16	35	16	50	23
Hail Guard (louvered)	16	7	16	7	16	7	16	7	34	15	34	15	34	15	34	15	45	20
Cu/Cu Condenser Coil[2]	6	3	13	6	13	6	15	7	12	5	23	10	23	10	23	10	25	11
Cu/Cu Condenser and Evaporator Coils[2]	12	5	19	9	20	9	26	12	25	11	49	22	49	22	49	22	47	21
Roof Curb (14–in. curb)	115	52	115	52	115	52	115	52	143	65	143	65	143	65	143	65	180	82
Roof Curb (24–in. curb)	197	89	197	89	197	89	197	89	245	111	245	111	245	111	245	111	255	116
CO_2 sensor	5	2	5	2	5	2	5	2	5	2	5	2	5	2	5	2	5	2
Flue Discharge Deflector	7	3	7	3	7	3	7	3	7	3	7	3	7	3	7	3	–	–
Optional Indoor Motor/Drive	10	5	10	5	10	5	10	5	15	7	15	7	15	7	15	7	45	20
Motor Master Controller	35	16	35	16	35	16	35	16	35	16	35	16	35	16	40	18	40	18
Return Smoke Detector	5	2	5	2	5	2	5	2	5	2	5	2	5	2	5	2	5	2
Supply Smoke Detector	5	2	5	2	5	2	5	2	5	2	5	2	5	2	5	2	5	2
Non–Fused Disconnect	15	7	15	7	15	7	15	7	15	7	15	7	15	7	15	7	15	7
Powered Convenience outlet	35	16	35	16	35	16	35	16	35	16	35	16	35	16	35	16	35	16
Non–Powered Convenience outlet	5	2	5	2	5	2	5	2	5	2	5	2	5	2	5	2	5	2
Enthalpy Sensor	2	1	2	1	2	1	2	1	2	1	2	1	2	1	2	1	2	1
Differential Enthalpy Sensor	3	1	3	1	3	1	3	1	3	1	3	1	3	1	3	1	3	1
2–Speed Indoor Fan Motor System with VFD	–	–	–	–	–	–	–	–	20	9	20	9	20	9	20	9	20	9

NOTE: Where multiple variations are available, the heaviest combination is listed.

– Not Available

1 For Hot Gas Re–Heat add MotorMaster Controller.

2 Where available.

3 Hot Gas re–Heat is no longer available for RGS size 036–060 models.

Min operating ambient temp (cooling):

In mechanical cooling mode, your ICP rooftop unit can safely operate down to an outdoor ambient temperature of 40°F (4°C) and 25°F (−4°C), with an accessory winter start kit. It is possible to provide cooling at lower outdoor ambient temperatures by using less outside air, economizers, and/or accessory low ambient kits.

Max operating ambient temp (cooling):

The maximum operating ambient temperature for cooling mode is 115°F (46°C). While cooling operation above 115°F (46°C) may be possible, it could cause either a reduction in performance, reliability, or a protective action by the unit's internal safety devices.

Min mixed air temp (heating):

Using the factory settings, the minimum temperatures for the mixed air (the combined temperature of the warm return air and the cold outdoor air) entering the dimpled, gas heat exchangers are:

Aluminized	Stainless Steel
50°F (10°C) continuous	40°F (4°C) continuous
45°F (7°C) intermittent	35°F (2°C) intermittent

Operating at lower mixed−air temperatures may be possible, if a field supplied, outdoor air thermostat initiates both heat stages when the temperature is less than the minimum temperatures listed above. Please contact your local ICP representative for assistance.

Min and max airflow (heating and cooling):

To maintain safe and reliable operation of your rooftop, operate within the heating airflow limits during heating mode and cooling airflow limits during cooling mode. Operating above the max may cause blow−off, undesired airflow noise, or airflow related problems with the rooftop unit. Operating below the min may cause problems with coil freeze−up and unsafe heating operation. Heating and cooling limitations differ when evaluating operating cfm, the minimum value is the HIGHER of the cooling and heating minimum cfm values published in Table 7 and the maximum value is the LOWER of the cooling and heating maximum values published in Table 7.

Heating−to−cooling changeover:

Your unit will automatically change from heating to cooling mode when using a thermostat with an auto−changeover feature.

Airflow:

All units are draw−through in cooling mode and blow−through in heating mode.

Outdoor air application strategies:

Economizers reduce operating expenses and compressor run time by providing a free source of cooling and a means of ventilation to match application changing needs. In fact, they should be considered for most applications. Also, consider the various economizer control methods and their benefits, as well as sensors required to accomplish your application goals. Please contact your local ICP representative for assistance.

Motor limits, Brake horsepower (BHP):

Due to internal design of ICP units, the air path, and specially designed motors, the full horsepower (maximum continuous BHP) band, as listed in Table 8 and 10, can be used with the utmost confidence. There is no need for extra safety factors, as ICP motors are designed and rigorously tested to use the entire, listed BHP range without either nuisance tripping or premature motor failure.

Propane heating:

Propane has different physical qualities than natural gas. As a result, propane requires different fuel to air mixture. To optimize the fuel/air mixture for propane, ICP sells different burner orifices in an easy to install accessory kit. To select the correct burner orifices or determine the heat capacity for a propane application, use either the selection software, or the unit's service manual.

High altitude heating:

High altitudes have less oxygen, which affects the fuel/air mixture in heat exchangers. In order to maintain a proper fuel/air mixture, heat exchangers operating in altitudes above 2000 ft (610 m) require different orifices. To select the correct burner orifices or determine the heat capacity for a high altitude application, use either the selection software, or the unit's service manual.

High altitudes have less oxygen, which means heat exchangers need less fuel. The new gas orifices in this field installed kit make the necessary adjustment for high altitude applications. They restore the optimal fuel to air mixture and maintain healthy combustion on altitudes above 2000 ft (610 m).

NOTE: Typical natural gas heating value ranges from 975 to 1050 Btu/ft^3 at sea level nationally. The heating value goes down approximately 1.7% per every thousand feet elevation. Standard factory orifices can typically be used up to 2000 ft (610m) elevation without any operational issues.

NOTE: For installations in Canada, the input rating should be derated by 10% for altitudes from 2000 ft (610m) to 4500 ft (1372m) above sea level.

Sizing a rooftop

Bigger isn't necessarily better. While an air conditioner needs to have enough capacity to meet the design loads, it doesn't need excess capacity. In fact, excess capacity typically results in very poor part load performance and humidity control.

Using higher design temperatures than ASHRAE recommends for your location, adding "safety factors" to the calculated load, are all signs of oversizing air conditioners. Oversizing the air conditioner leads to poor humidity control, reduced efficiency, higher utility bills, larger indoor temperature swings, excessive noise, and increased wear and tear on the air conditioner.

Rather than oversizing an air conditioner, engineers should “right size” or even slightly undersize air conditioners. Correctly sizing an air conditioner controls humidity better; promotes efficiency; reduces utility bills; extends equipment life, and maintains even, comfortable temperatures. Please contact your local ICP representative for assistance.

Low ambient applications

The optional ICP economizer can adequately cool your space by bringing in fresh, cool outside air. In fact, when so equipped, accessory low ambient kit may not be necessary. In low ambient conditions, unless the outdoor air is excessively humid or contaminated, economizer based “free cooling” is the preferred less costly and energy conscious method.

In low ambient applications where outside air might not be desired (such as contaminated or excessively humid outdoor environments), your ICP rooftop can operate at ambient temperatures down to −20°F (−29°C) using the recommended accessory MotorMaster low ambient controller.

2−Speed Indoor Fan Motor System with Variable Frequency Drive (VFD)

ICP’s 2−speed indoor fan motor system system utilizes a Variable Frequency Drive (VFD) to automatically adjust the indoor fan motor speed in sequence with the units cooling operation. Per ASHRAE 90.1 standard section 6.4.3.10.b, during the first stage of cooling operation the VFD will adjust the fan motor to provide 2/3rd of the total cfm established for the unit. When a call for the second stage of cooling is required, the VFD will allow the total cfm for the unit established (100%). During the heating mode, the VFD will allow total design cfm (100%) operation and during the ventilation mode the VFD will allow operation to 2/3rd of total cfm.

The VFD used in ICP’s 2−speed indoor fan motor system system has soft start capabilities to slowly ramp up the speeds, thus eliminating any high inrush air volume during initial start−up. It also has internal over current protection for the fan motor and a field installed display kit that allows adjustment and in depth diagnostics of the VFD.

This 2−speed indoor fan motor system system is available on models with 2−stage cooling operation with electrical mechanical (multi Protocol) controls. Both space sensor and conventional thermostats/controls can be used to provide accurate control in any application.

The 2−speed indoor fan motor system system is very flexible for initial fan performance set up and adjustment. The standard factory shipped VFD is pre programmed to automatically stage the fan speed between the first and second stage of cooling. The unit fan performance static pressure and cfm can be easily adjusted using the traditional means of pulley adjustments. The other means to adjust the unit static and cfm performance is to utilize the field installed display module and adjust the frequency and voltage in the VFD to required performance requirements. In either case, once set up the VFD will automatically adjust the speed between the cooling stage operation.

RGS − 2−Speed Indoor Fan Motor System − Variable Frequency Drive (VFD) HP Rating

Unit Size	VOLTAGE	STATIC OPTION	VFD HP RATING
090/091	208/230, 460, 575	STD	3
	208/230, 460	MED	3
	575	MED	5
	208/230, 460, 575	HIGH	7.5
101/102	208/230, 460, 575	STD	3
	208/230, 460, 575	MED	3
	208/230, 460, 575	HIGH	5
120/121	208/230, 460, 575	STD	3
	208/230, 460, 575	MED	5
	208/230, 460, 575	HIGH	7.5
150	208/230, 460	STD	3
	575	STD	5
	208/230, 460, 575	MED	5
	208/230, 460, 575	HIGH	7.5
180	208/230. 460	STD	3
	575	STD	5
	208/230, 460, 575	MED	5
	208/230, 460, 575	HIGH	7.5

SELECTION PROCEDURE (WITH RGS072 EXAMPLE)[1]

I. Determine cooling and heating loads.

Given:

Mixed air dry bulb	80°F (27°C)
Mixed air wet bulb	67°F (19°C)
Ambient dry bulb	95°F (35°C)
TC_{Load}	72.0 MBH
SHC_{Load}	54.0 MBH
Vertical supply air	2100 CFM
Heating load	85.0 MBH
External static pressure	0.67 in. wg
Electrical characteristics	230–3–60

II. Make an initial guess at cooling tons.

Refrig. tons = TC_{Load} / 12 MBH per ton
Refrig. tons = 72.0 / 12 = 6.0 tons
In this case, start by looking at the RGS072.

III. Look up the rooftop's TC and SHC.

Table 18 shows that, at the application's supply air CFM, mixed air and ambient temperatures, the RGS072 supplies:
TC = 73.7 MBH[2]
SHC = 54.4 MBH[2]

IV. Calculate the building latent heat load.

$LC_{Load} = TC_{Load} - SHC_{Load}$
LC_{Load} = 72.0 MBH – 54.0 MBH = 18.0 MBH

V. Calculate RTU latent heat capacity.

LC = TC – SHC
LC = 73.7 MBH – 54.4 MBH = 19.3 MBH

VI. Compare RTU capacities to loads.[3]

Compare the rooftop's SHC and LC to the building's sensible and latent heat loads.

VII. Select factory options (FIOP)

Local code requires an economizer for any unit with TC greater than 65.0 MBH.

VIII. Calculate the total static pressure.

External static pressure	0.67 in. wg
Sum of FIOP / Accessory static	+0.13 in. wg
Total Static Pressure	0.80 in. wg

IX. Look up the indoor fan RPM & BHP.

Table 53 shows, at 2100 CFM & ESP= 0.8,
RPM = 1358 & BHP = 1.52

X. Convert BHP (Step VIII) into fan motor heat.

Fan motor heat = 2.546* BHP/Motor Eff.[4]
Fan motor heat = 4.9 MBH

XI. Calculate RTU heating capacity.

Building heating load	85.0 MBH
Fan motor heat	–4.9 MBH
Required heating capacity	80.1 MBH

XII. Select a gas heater.

Table 4 shows the heating capacities of the RGS072 = 93.0 MBH. Select the RGS072

XIII. Determine electrical requirements.

The MCA and MOCP tables show RGS072 (without convenience outlet) as:
MCA = 30.5 amps & MOCP = 45.0 amps
Min. disconnect size: FLA = 30 & LRA = 157.

Legend

BHP	—	Brake horsepower
FLA	—	Full load amps
LC	—	Latent capacity
LRA	—	Lock rotor amp
MBH	—	(1,000) BTUH
MCA	—	Min. circuit ampacity
MOCP	—	Max. over–current protection
RPM	—	Revolutions per minute
RTU	—	Rooftop unit
SHC	—	Sensible heat capacity
TC	—	Total capacity

NOTES:

1. Selection software by ICP saves time by performing many of the steps above. Contact your ICP sales representative for assistance.
2. Unit ratings are gross capacities and do not include the effect of evaporator fan motor heat. See Step X. for determining amount of evaporator fan motor heat to subtract from total and sensible capacities to obtain net cooling and net sensible capacities.
3. Selecting a unit with a SHC slightly lower than the SHC_{Load} is often better than oversizing. Slightly lower SHC's will help control indoor humidity, and prevent temperature swings.
4. Indoor fan motor efficiency is available in the Electrical Information. Use the decimal form in the equation, eg. 80% = .8.

Table 15 – COOLING CAPACITIES 1–STAGE COOLING 3 TONS

RGS036 (RTPF)				Ambient Temperature											
				85			95			105			115		
				EAT (db)			EAT (db)			EAT (db)			EAT (db)		
				75	80	85	75	80	85	75	80	85	75	80	85
900 Cfm	EAT (wb)	58	TC	29.0	29.0	32.9	26.8	26.8	30.5	24.5	24.5	28.0	22.0	22.0	25.3
			SHC	25.1	29.0	32.9	23.1	26.8	30.5	21.0	24.5	28.0	18.8	22.0	25.3
		62	TC	31.3	31.3	31.4	28.4	28.4	29.8	25.4	25.4	28.1	22.2	22.2	26.1
			SHC	22.8	27.1	31.4	21.2	25.5	29.8	19.5	23.8	28.1	17.6	21.9	26.1
		67	TC	35.3	35.3	35.3	32.6	32.6	32.6	29.7	29.7	29.7	26.3	26.3	26.3
			SHC	19.0	23.2	27.3	17.5	21.7	25.9	16.0	20.3	24.6	14.4	18.7	23.0
		72	TC	39.3	39.3	39.3	36.9	36.9	36.9	34.1	34.1	34.1	30.8	30.8	30.8
			SHC	15.1	19.1	23.0	13.9	17.9	21.8	12.4	16.5	20.5	10.8	14.9	19.0
		76	TC	–	42.1	42.1	–	40.0	40.0	–	37.5	37.5	–	–	–
			SHC	–	15.7	20.7	–	14.5	19.5	–	13.3	18.3	–	–	–
1050 Cfm	EAT (wb)	58	TC	31.1	31.1	35.2	28.8	28.8	32.7	26.4	26.4	30.1	23.8	23.8	27.2
			SHC	26.9	31.1	35.2	24.8	28.8	32.7	22.7	26.4	30.1	20.4	23.8	27.2
		62	TC	32.6	32.6	34.6	29.7	29.7	33.0	26.6	26.6	30.8	24.0	24.0	27.8
			SHC	24.8	29.7	34.6	23.1	28.1	33.0	21.2	26.0	30.8	19.0	23.4	27.8
		67	TC	36.6	36.6	36.6	33.9	33.9	33.9	30.8	30.8	30.8	27.4	27.4	27.4
			SHC	20.2	25.0	29.8	18.9	23.8	28.7	17.3	22.3	27.2	15.7	20.6	25.6
		72	TC	40.4	40.4	40.4	38.1	38.1	38.1	35.2	35.2	35.2	32.0	32.0	32.0
			SHC	15.7	20.2	24.8	14.4	19.1	23.8	13.0	17.8	22.5	11.5	16.3	21.1
		76	TC	–	43.4	43.4	–	41.1	41.1	–	38.6	38.6	–	–	–
			SHC	–	16.4	22.1	–	15.3	19.5	–	14.1	18.4	–	–	–
1200 Cfm	EAT (wb)	58	TC	32.8	32.8	37.2	30.5	30.5	34.6	28.0	28.0	31.9	25.3	25.3	28.9
			SHC	28.4	32.8	37.2	26.3	30.5	34.6	24.1	28.0	31.9	21.7	25.3	28.9
		62	TC	33.7	33.7	37.5	30.7	30.7	35.5	28.3	28.3	32.6	25.4	25.4	30.2
			SHC	26.5	32.0	37.5	24.7	30.1	35.5	22.5	27.6	32.6	20.5	25.4	30.2
		67	TC	37.6	37.6	37.6	34.9	34.9	34.9	31.7	31.7	31.7	28.2	28.2	28.2
			SHC	21.3	26.7	32.0	20.1	25.6	31.1	18.6	24.2	29.7	16.9	22.5	28.1
		72	TC	41.2	41.2	41.2	39.0	39.0	39.0	36.1	36.1	36.1	32.7	32.7	32.7
			SHC	16.1	21.3	26.4	15.0	20.2	25.5	13.6	19.0	24.3	12.0	17.5	22.9
		76	TC	–	44.2	44.2	–	41.8	41.8	–	–	–	–	–	–
			SHC	–	17.0	21.8	–	15.9	20.9	–	–	–	–	–	–
1350 Cfm	EAT (wb)	58	TC	34.3	34.3	38.9	31.9	31.9	36.2	29.4	29.4	33.4	26.6	26.6	30.4
			SHC	29.7	34.3	38.9	27.6	31.9	36.2	25.3	29.4	33.4	22.8	26.6	30.4
		62	TC	34.7	34.7	39.6	32.3	32.3	37.0	29.4	29.4	34.8	26.7	26.7	31.7
			SHC	27.9	33.7	39.6	25.9	31.4	37.0	24.0	29.4	34.8	21.6	26.7	31.7
		67	TC	38.5	38.5	38.5	35.7	35.7	35.7	32.5	32.5	32.5	28.9	28.9	30.4
			SHC	22.4	28.2	34.0	21.2	27.3	33.3	19.8	25.9	32.1	18.0	24.2	30.4
		72	TC	42.0	42.0	42.0	39.6	39.6	39.6	36.7	36.7	36.7	–	–	–
			SHC	16.6	22.2	27.8	15.4	21.2	26.9	14.1	20.0	26.0	–	–	–
		76	TC	–	44.9	44.9	–	42.5	42.5	–	–	–	–	–	–
			SHC	–	17.6	23.0	–	16.5	22.0	–	–	–	–	–	–
1500 Cfm	EAT (wb)	58	TC	35.5	35.5	40.2	33.2	33.2	37.7	30.5	30.5	34.7	27.7	27.7	31.6
			SHC	30.8	35.5	40.2	28.7	33.2	37.7	26.3	30.5	34.7	23.8	27.7	31.6
		62	TC	35.8	35.8	40.9	33.7	33.7	38.3	30.6	30.6	36.2	27.8	27.8	33.0
			SHC	28.9	34.9	40.9	26.9	32.6	38.3	25.0	30.6	36.2	22.6	27.8	33.0
		67	TC	39.1	39.1	39.1	36.3	36.3	36.3	33.1	33.1	34.4	29.4	29.4	32.7
			SHC	23.3	29.6	35.9	22.2	28.8	35.4	20.9	27.6	34.4	19.1	25.9	32.7
		72	TC	42.6	42.6	42.6	40.1	40.1	40.1	37.4	37.4	37.4	–	–	–
			SHC	17.0	23.1	29.2	15.8	22.1	28.3	14.5	21.0	27.5	–	–	–
		76	TC	–	45.4	45.4	–	43.0	43.0	–	–	–	–	–	–
			SHC	–	18.0	24.0	–	16.9	23.0	–	–	–	–	–	–

LEGEND:

–	–	Do not operate
Cfm	–	Cubic feet per minute (supply air)
EAT(db)	–	Entering air temperature (dry bulb)
EAT(wb)	–	Entering air temperature (wet bulb)
SHC	–	Sensible heat capacity
TC	–	Total capacity

Table 16 – COOLING CAPACITIES 1–STAGE COOLING 4 TONS

RGS048 (RTPF)				Ambient Temperature											
				85			95			105			115		
				EAT (db)			EAT (db)			EAT (db)			EAT (db)		
				75	80	85	75	80	85	75	80	85	75	80	85
1200 Cfm	EAT (wb)	58	TC	39.1	39.1	42.6	36.6	36.6	39.6	33.1	33.1	37.8	30.1	30.1	34.4
			SHC	32.9	37.7	42.6	30.5	35.0	39.6	28.5	33.1	37.8	25.8	30.1	34.4
		62	TC	42.3	42.3	42.3	39.1	39.1	39.1	35.3	35.3	36.8	31.2	31.2	34.6
			SHC	30.0	35.2	40.5	28.3	33.7	39.0	26.2	31.5	36.8	24.0	29.3	34.6
		67	TC	47.0	47.0	47.0	44.7	44.7	44.7	40.8	40.8	40.8	36.7	36.7	36.7
			SHC	25.0	29.9	34.9	23.7	28.9	34.0	21.7	26.9	32.1	19.7	25.0	30.2
		72	TC	50.4	50.4	50.4	48.9	48.9	48.9	46.1	46.1	46.1	42.5	42.5	42.5
			SHC	19.7	24.3	28.8	18.7	23.5	28.3	17.2	22.0	26.8	15.4	20.2	25.1
		76	TC	–	52.3	52.3	–	50.9	50.9	–	49.3	49.3	–	46.3	46.3
			SHC	–	20.0	25.1	–	18.8	25.4	–	17.8	24.4	–	16.2	22.8
1400 cfm	EAT (wb)	58	TC	42.0	42.0	45.1	38.5	38.5	43.8	35.6	35.6	40.5	32.5	32.5	37.0
			SHC	35.0	40.1	45.1	33.3	38.5	43.8	30.7	35.6	40.5	27.9	32.5	37.0
		62	TC	44.4	44.4	44.7	40.7	40.7	42.8	36.9	36.9	40.7	32.9	32.9	37.8
			SHC	32.6	38.6	44.7	30.7	36.8	42.8	28.5	34.6	40.7	26.1	32.0	37.8
		67	TC	48.3	48.3	48.3	45.8	45.8	45.8	42.4	42.4	42.4	38.3	38.3	38.3
			SHC	26.2	31.8	37.3	25.1	31.0	36.9	23.4	29.3	35.3	21.5	27.6	33.6
		72	TC	51.2	51.2	51.2	49.8	49.8	49.8	47.4	47.4	47.4	43.7	43.7	43.7
			SHC	20.0	25.2	30.4	19.1	24.6	30.2	17.8	23.5	29.3	16.0	21.8	27.7
		76	TC	–	52.8	52.8	–	51.4	51.4	–	50.1	50.1	–	47.0	47.0
			SHC	–	20.3	25.7	–	19.2	26.9	–	18.5	24.0	–	17.1	22.7
1600 Cfm	EAT (wb)	58	TC	43.6	43.6	49.3	40.7	40.7	46.2	37.7	37.7	42.9	34.5	34.5	39.3
			SHC	37.8	43.6	49.3	35.2	40.7	46.2	32.5	37.7	42.9	29.6	34.5	39.3
		62	TC	45.6	45.6	47.6	42.1	42.1	46.1	38.3	38.3	43.7	34.8	34.8	39.8
			SHC	34.4	41.0	47.6	32.7	39.4	46.1	30.5	37.1	43.7	27.5	33.6	39.8
		67	TC	49.2	49.2	49.2	47.0	47.0	47.0	43.6	43.6	43.6	39.3	39.3	39.3
			SHC	27.2	33.3	39.4	26.4	32.9	39.5	24.8	31.6	38.3	22.8	29.6	36.4
		72	TC	51.8	51.8	51.8	50.4	50.4	50.4	48.2	48.2	48.2	44.6	44.6	44.6
			SHC	20.3	26.0	31.7	19.5	25.5	31.6	18.3	24.7	31.2	16.6	23.2	29.8
		76	TC	–	53.2	53.2	–	51.6	51.6	–	50.5	50.5	–	47.8	47.8
			SHC	–	20.6	26.4	–	19.7	25.8	–	19.1	25.4	–	17.8	24.3
1800 Cfm	EAT (wb)	58	TC	45.3	45.3	51.2	42.6	42.6	48.3	39.5	39.5	44.9	36.2	36.2	41.2
			SHC	39.3	45.3	51.2	36.9	42.6	48.3	34.1	39.5	44.9	31.1	36.2	41.2
		62	TC	46.5	46.5	50.1	43.5	43.5	49.0	40.0	40.0	45.4	36.7	36.7	41.7
			SHC	36.0	43.0	50.1	34.5	41.7	49.0	31.7	38.6	45.4	29.0	35.3	41.7
		67	TC	50.0	50.0	50.0	48.1	48.1	48.1	44.5	44.5	44.5	40.4	40.4	40.4
			SHC	28.1	34.7	41.3	27.8	35.1	42.3	26.1	33.6	41.0	24.3	31.8	39.4
		72	TC	52.2	52.2	52.2	50.9	50.9	50.9	48.7	48.7	48.7	45.4	45.4	45.4
			SHC	20.6	26.7	32.8	19.8	26.4	33.0	18.7	25.8	32.8	17.2	24.4	31.6
		76	TC	–	53.5	53.5	–	51.9	51.9	–	51.0	51.0	–	48.2	48.2
			SHC	–	21.1	27.7	–	20.2	26.9	–	19.6	26.5	–	18.4	25.5
2000 Cfm	EAT (wb)	58	TC	46.6	46.6	52.7	44.2	44.2	50.1	41.1	41.1	46.6	37.6	37.6	42.8
			SHC	40.5	46.6	52.7	38.3	44.2	50.1	35.5	41.1	46.6	32.4	37.6	42.8
		62	TC	47.4	47.4	51.9	44.9	44.9	50.8	41.6	41.6	47.0	37.7	37.7	44.6
			SHC	37.1	44.5	51.9	35.9	43.4	50.8	32.9	39.9	47.0	30.7	37.7	44.6
		67	TC	50.4	50.4	50.4	48.6	48.6	48.6	45.2	45.2	45.2	41.3	41.3	42.1
			SHC	28.8	35.8	42.8	28.5	36.2	43.8	27.3	35.3	43.3	25.6	33.8	42.1
		72	TC	52.5	52.5	52.5	51.0	51.0	51.0	49.4	49.4	49.4	46.0	46.0	46.0
			SHC	20.8	27.4	33.9	20.0	26.9	33.8	19.1	26.7	34.2	17.6	25.5	33.3
		76	TC	–	53.7	53.7	–	52.1	52.1	–	51.1	51.1	–	48.5	48.5
			SHC	–	21.6	28.8	–	20.6	27.8	–	20.0	27.4	–	18.9	26.6

LEGEND:

–	–	Do not operate
Cfm	–	Cubic feet per minute (supply air)
EAT(db)	–	Entering air temperature (dry bulb)
EAT(wb)	–	Entering air temperature (wet bulb)
SHC	–	Sensible heat capacity
TC	–	Total capacity

Table 17 – COOLING CAPACITIES 1–STAGE COOLING 5 TONS

RGS060 (RTPF)				Ambient Temperature											
				85			95			105			115		
				EAT (db)			EAT (db)			EAT (db)			EAT (db)		
				75	80	85	75	80	85	75	80	85	75	80	85
1500 Cfm	EAT (wb)	58	TC	52.4	52.4	59.3	48.8	48.8	55.4	45.1	45.1	51.3	41.2	41.2	46.9
			SHC	45.4	52.4	59.3	42.3	48.8	55.4	38.9	45.1	51.3	35.4	41.2	46.9
		62	TC	56.1	56.1	56.5	51.5	51.5	54.1	46.5	46.5	51.5	41.5	41.5	48.4
			SHC	41.2	48.8	56.5	38.8	46.5	54.1	36.2	43.9	51.5	33.4	40.9	48.4
		67	TC	62.7	62.7	62.7	58.7	58.7	58.7	53.6	53.6	53.6	48.2	48.2	48.2
			SHC	34.2	41.7	49.1	32.2	39.8	47.4	29.8	37.4	45.0	27.3	34.9	42.6
		72	TC	69.6	69.6	69.6	65.8	65.8	65.8	61.0	61.0	61.0	55.7	55.7	55.7
			SHC	27.3	34.4	41.5	25.3	32.6	39.8	23.1	30.5	37.8	20.8	28.2	35.6
		76	TC	–	74.9	74.9	–	71.2	71.2	–	66.9	66.9	–	62.0	62.0
			SHC	–	28.0	36.3	–	26.2	34.5	–	24.6	32.8	–	22.5	30.8
1750 Cfm	EAT (wb)	58	TC	56.1	56.1	63.5	52.6	52.6	59.6	48.4	48.4	55.0	44.2	44.2	50.3
			SHC	48.7	56.1	63.5	45.6	52.6	59.6	41.8	48.4	55.0	38.1	44.2	50.3
		62	TC	58.5	58.5	62.4	53.8	53.8	59.9	48.7	48.7	56.6	44.5	44.5	51.6
			SHC	44.9	53.7	62.4	42.4	51.1	59.9	39.4	48.0	56.6	35.7	43.7	51.6
		67	TC	64.6	64.6	64.6	60.7	60.7	60.7	55.6	55.6	55.6	49.9	49.9	49.9
			SHC	36.4	44.9	53.5	34.6	43.4	52.2	32.2	41.0	49.8	29.6	38.4	47.2
		72	TC	71.6	71.6	71.6	67.7	67.7	67.7	63.2	63.2	63.2	57.5	57.5	57.5
			SHC	28.2	36.6	44.9	26.3	34.8	43.3	24.3	32.8	41.4	21.8	30.5	39.1
		76	TC	–	76.8	76.8	–	72.9	72.9	–	68.5	68.5	–	63.7	63.7
			SHC	–	29.4	39.1	–	27.7	35.0	–	25.9	33.7	–	23.9	31.9
2000 Cfm	EAT (wb)	58	TC	58.9	58.9	66.7	55.5	55.5	62.8	51.2	51.2	58.1	46.8	46.8	53.2
			SHC	51.2	58.9	66.7	48.1	55.5	62.8	44.3	51.2	58.1	40.4	46.8	53.2
		62	TC	60.0	60.0	67.6	55.8	55.8	64.5	51.5	51.5	59.5	46.8	46.8	55.4
			SHC	47.9	57.8	67.6	45.3	54.9	64.5	41.6	50.6	59.5	38.3	46.8	55.4
		67	TC	66.5	66.5	66.5	62.3	62.3	62.3	57.3	57.3	57.3	51.2	51.2	51.7
			SHC	38.7	48.5	58.4	36.8	46.7	56.6	34.4	44.4	54.3	31.7	41.7	51.7
		72	TC	73.2	73.2	73.2	69.1	69.1	69.1	64.6	64.6	64.6	59.0	59.0	59.0
			SHC	29.1	38.6	48.1	27.3	36.8	46.4	25.2	34.9	44.6	22.9	32.6	42.4
		76	TC	–	78.4	78.4	–	74.3	74.3	–	69.8	69.8	–	–	–
			SHC	–	30.7	39.4	–	28.9	37.9	–	27.0	36.2	–	–	–
2250 Cfm	EAT (wb)	58	TC	61.5	61.5	69.5	57.9	57.9	65.5	53.6	53.6	60.8	49.0	49.0	55.7
			SHC	53.4	61.5	69.5	50.2	57.9	65.5	46.4	53.6	60.8	42.3	49.0	55.7
		62	TC	61.9	61.9	71.3	58.1	58.1	67.0	53.7	53.7	63.3	49.0	49.0	58.0
			SHC	50.4	60.8	71.3	47.1	57.1	67.0	44.1	53.7	63.3	40.1	49.0	58.0
		67	TC	67.9	67.9	67.9	63.5	63.5	63.5	58.6	58.6	58.7	52.4	52.4	56.0
			SHC	40.8	51.7	62.6	38.7	49.7	60.7	36.6	47.6	58.7	33.8	44.9	56.0
		72	TC	74.4	74.4	74.4	70.3	70.3	70.3	65.7	65.7	65.7	60.2	60.2	60.2
			SHC	29.9	40.5	51.1	28.1	38.8	49.5	26.1	36.9	47.7	23.8	34.8	45.7
		76	TC	–	79.6	79.6	–	75.5	75.5	–	70.9	70.9	–	–	–
			SHC	–	31.7	41.7	–	30.0	40.2	–	28.1	38.5	–	–	–
2500 Cfm	EAT (wb)	58	TC	63.6	63.6	71.9	60.0	60.0	67.9	55.7	55.7	63.1	50.9	50.9	57.8
			SHC	55.3	63.6	71.9	52.1	60.0	67.9	48.2	55.7	63.1	44.0	50.9	57.8
		62	TC	64.0	64.0	74.0	60.6	60.6	69.5	55.7	55.7	65.7	51.0	51.0	60.2
			SHC	52.2	63.1	74.0	49.0	59.2	69.5	45.8	55.7	65.7	41.7	51.0	60.2
		67	TC	68.9	68.9	68.9	64.6	64.6	64.8	59.7	59.7	62.8	53.4	53.4	60.1
			SHC	42.7	54.7	66.7	40.7	52.7	64.8	38.5	50.7	62.8	35.7	47.9	60.1
		72	TC	75.4	75.4	75.4	71.2	71.2	71.2	66.6	66.6	66.6	61.1	61.1	61.1
			SHC	30.7	42.3	53.9	28.9	40.7	52.4	26.9	38.8	50.6	24.6	36.6	48.7
		76	TC	–	80.6	80.6	–	76.4	76.4	–	–	–	–	–	–
			SHC	–	32.7	43.8	–	31.0	42.3	–	–	–	–	–	–

LEGEND:

–	–	Do not operate
Cfm	–	Cubic feet per minute (supply air)
EAT(db)	–	Entering air temperature (dry bulb)
EAT(wb)	–	Entering air temperature (wet bulb)
SHC	–	Sensible heat capacity
TC	–	Total capacity

Table 18 – COOLING CAPACITIES 1–STAGE COOLING 6 TONS

RGS072 (RTPF)				Ambient Temperature											
				85			95			105			115		
				EAT (db)			EAT (db)			EAT (db)			EAT (db)		
				75	80	85	75	80	85	75	80	85	75	80	85
1800 Cfm	EAT (wb)	58	TC	64.9	64.9	73.3	62.1	62.1	70.0	58.9	58.9	66.4	55.6	55.6	62.7
			SHC	56.6	64.9	73.3	54.1	62.1	70.0	51.4	58.9	66.4	48.5	55.6	62.7
		62	TC	68.7	68.7	70.3	64.9	64.9	68.5	60.8	60.8	66.4	56.4	56.4	64.0
			SHC	51.7	61.0	70.3	49.9	59.2	68.5	47.9	57.2	66.4	45.7	54.9	64.0
		67	TC	75.6	75.6	75.6	71.7	71.7	71.7	67.4	67.4	67.4	62.5	62.5	62.5
			SHC	42.8	52.2	61.5	41.2	50.5	59.8	39.3	48.6	58.0	37.2	46.5	55.8
		72	TC	82.6	82.6	82.6	78.5	78.5	78.5	73.7	73.7	73.7	67.8	67.8	67.8
			SHC	33.5	42.8	52.2	31.9	41.3	50.6	30.0	39.3	48.6	27.8	36.9	45.9
		76	TC	–	87.5	87.5	–	83.3	83.3	–	77.7	77.7	–	70.9	70.9
			SHC	–	35.0	44.9	–	33.5	43.4	–	31.6	41.5	–	29.3	39.1
2100 Cfm	EAT (wb)	58	TC	68.9	68.9	77.7	65.9	65.9	74.3	62.5	62.5	70.5	58.7	58.7	66.2
			SHC	60.1	68.9	77.7	57.4	65.9	74.3	54.5	62.5	70.5	51.2	58.7	66.2
		62	TC	70.9	70.9	76.9	67.1	67.1	75.0	63.0	63.0	72.5	58.7	58.7	68.7
			SHC	55.6	66.3	76.9	53.8	64.4	75.0	51.6	62.1	72.5	48.7	58.7	68.7
		67	TC	77.8	77.8	77.8	73.7	73.7	73.7	69.2	69.2	69.2	64.0	64.0	64.0
			SHC	45.4	56.1	66.8	43.7	54.4	65.2	41.8	52.5	63.2	39.6	50.2	60.7
		72	TC	84.5	84.5	84.5	80.3	80.3	80.3	75.1	75.1	75.1	68.8	68.8	68.8
			SHC	34.5	45.2	55.9	32.9	43.5	54.2	30.9	41.4	52.0	28.5	38.7	48.9
		76	TC	–	89.2	89.2	–	84.7	84.7	–	78.8	78.8	–	71.6	71.6
			SHC	–	36.3	47.8	–	34.7	46.0	–	32.6	43.7	–	30.1	40.9
2400 Cfm	EAT (wb)	58	TC	72.0	72.0	81.2	68.7	68.7	77.5	65.2	65.2	73.5	61.1	61.1	68.9
			SHC	62.8	72.0	81.2	60.0	68.7	77.5	56.9	65.2	73.5	53.3	61.1	68.9
		62	TC	72.8	72.8	82.8	68.9	68.9	80.7	65.2	65.2	76.4	61.2	61.2	71.6
			SHC	59.1	71.0	82.8	57.2	68.9	80.7	54.1	65.2	76.4	50.7	61.2	71.6
		67	TC	79.4	79.4	79.4	75.2	75.2	75.2	70.5	70.5	70.5	65.1	65.1	65.3
			SHC	47.7	59.8	71.8	46.0	58.1	70.2	44.0	56.0	68.1	41.6	53.5	65.3
		72	TC	86.0	86.0	86.0	81.6	81.6	81.6	76.1	76.1	76.1	69.6	69.6	69.6
			SHC	35.3	47.2	59.2	33.7	45.6	57.5	31.7	43.3	55.0	29.1	40.3	51.4
		76	TC	–	90.3	90.3	–	85.7	85.7	–	79.6	79.6	–	72.1	72.1
			SHC	–	37.3	49.8	–	35.6	48.0	–	33.5	45.6	–	30.8	42.5
2700 Cfm	EAT (wb)	58	TC	60.3	60.3	74.1	71.1	71.1	80.2	67.4	67.4	76.0	63.0	63.0	71.1
			SHC	46.4	60.3	74.1	62.0	71.1	80.2	58.8	67.4	76.0	55.0	63.0	71.1
		62	TC	65.4	65.4	69.3	71.2	71.2	83.3	67.5	67.5	79.0	63.1	63.1	73.8
			SHC	41.0	55.1	69.3	59.0	71.2	83.3	55.9	67.5	79.0	52.3	63.1	73.8
		67	TC	72.7	72.7	72.7	76.3	76.3	76.3	71.5	71.5	72.6	65.8	65.8	69.4
			SHC	33.8	48.0	62.2	48.2	61.6	74.9	46.1	59.3	72.6	43.5	56.5	69.4
		72	TC	79.7	79.7	79.7	82.5	82.5	82.5	76.9	76.9	76.9	70.1	70.1	70.1
			SHC	25.8	40.2	54.6	34.5	47.5	60.5	32.3	45.0	57.7	29.7	41.7	53.8
		76	TC	–	85.1	85.1	–	86.4	86.4	–	80.2	80.2	–	72.5	72.5
			SHC	–	33.5	48.4	–	36.5	49.9	–	34.3	47.3	–	31.5	44.0
3000 Cfm	EAT (wb)	58	TC	64.9	64.9	78.8	73.1	73.1	82.5	69.2	69.2	78.0	64.5	64.5	72.7
			SHC	51.1	64.9	78.8	63.8	73.1	82.5	60.3	69.2	78.0	56.2	64.5	72.7
		62	TC	68.7	68.7	76.5	73.2	73.2	85.7	69.2	69.2	81.0	64.5	64.5	75.5
			SHC	45.5	61.0	76.5	60.7	73.2	85.7	57.4	69.2	81.0	53.5	64.5	75.5
		67	TC	75.6	75.6	75.6	77.2	77.2	79.4	72.2	72.2	76.8	66.3	66.3	73.0
			SHC	36.6	52.2	67.7	50.2	64.8	79.4	48.0	62.4	76.8	45.1	59.1	73.0
		72	TC	82.6	82.6	82.6	83.3	83.3	83.3	77.5	77.5	77.5	70.5	70.5	70.5
			SHC	27.2	42.8	58.5	35.1	49.2	63.3	32.9	46.6	60.3	30.2	43.0	55.9
		76	TC	–	87.5	87.5	–	86.9	86.9	–	80.6	80.6	–	72.8	72.8
			SHC	–	35.0	51.5	–	37.3	51.6	–	35.0	48.9	–	32.1	45.3

LEGEND:

–	–	Do not operate in this region
Cfm	–	Cubic feet per minute (supply air)
EAT(db)	–	Entering air temperature (dry bulb)
EAT(wb)	–	Entering air temperature (wet bulb)
SHC	–	Sensible heat capacity
TC	–	Total capacity

RGS072 (6 TONS) – UNIT WITH HOT GAS RE–HEAT SYSTEM IN SUBCOOLING MODE										
Air Entering Evaporator – CFM										
Temp (F) Air Ent Condenser (Edb)		80 dry bulb			80 dry bulb			80 dry bulb		
		72 wet bulb			67 wet bulb			62 wet bulb		
		2100	2400	2700	2100	2400	2700	2100	2400	2700
75	TC	86.7	89.9	92.8	79.3	82.3	84.9	71.9	74.6	77.0
	SHC	40.1	41.8	43.3	46.9	48.5	49.9	53.7	55.2	56.5
	kW	4.3	4.3	4.3	4.2	4.2	4.2	4.2	4.2	4.2
85	TC	79.5	82.6	85.4	72.5	75.3	77.9	65.4	68.0	70.3
	SHC	32.1	34.0	35.7	40.7	42.5	44.1	49.4	51.0	52.5
	kW	5.0	5.0	5.0	5.0	5.0	5.0	4.9	4.9	4.9
95	TC	72.4	75.3	78.1	65.6	68.3	70.8	58.8	61.3	63.6
	SHC	24.1	26.3	28.1	34.6	36.6	38.3	45.1	46.9	48.5
	kW	5.8	5.8	5.8	5.7	5.7	5.7	5.6	5.6	5.6
105	TC	65.2	68.1	70.7	58.7	61.4	63.8	52.3	54.7	56.8
	SHC	16.2	18.5	20.5	28.5	30.6	32.6	40.7	42.8	44.6
	kW	6.5	6.5	6.5	6.4	6.4	6.4	6.3	6.3	6.3
115	TC	58.0	60.8	63.3	51.9	54.4	56.7	45.7	48.0	50.1
	SHC	8.2	10.7	13.0	22.3	24.7	26.8	36.4	38.6	40.6
	kW	7.2	7.2	7.2	7.1	7.1	7.1	7.0	7.0	7.0

RGS072 (6 TONS) – UNIT WITH HOT GAS RE–HEAT SYSTEM IN HOT GAS REHEAT MODE										
Air Entering Evaporator – CFM										
Temp (F) Air Ent Condenser (Edb)		75 dry bulb			75 dry bulb			75 dry bulb		
		62.5 wet bulb (50% relative)			64 wet bulb (55% relative)			65.3 wet bulb (60% relative)		
		2100	2400	2700	2100	2400	2700	1750	2000	2700
80	TC	16.7	19.8	22.5	18.8	21.9	24.7	16.2	19.4	26.7
	SHC	0.6	0.6	0.6	–0.4	–0.4	–0.4	–1.3	–1.3	–1.3
	kW	4.0	4.0	4.0	4.0	4.0	4.0	4.0	4.0	4.0
75	TC	17.7	20.6	23.1	19.6	22.6	25.3	17.3	20.3	27.1
	SHC	0.6	0.6	0.6	–0.3	–0.3	–0.3	–1.2	–1.2	–1.2
	kW	4.0	4.0	4.0	4.0	4.0	4.0	4.0	4.0	4.0
70	TC	18.6	21.3	23.7	20.5	23.3	25.8	18.3	21.1	27.6
	SHC	0.7	0.7	0.7	–0.2	–0.2	–0.2	–1.0	–1.0	–1.0
	kW	4.0	4.0	4.0	4.1	4.1	4.1	4.1	4.1	4.1
60	TC	20.5	22.9	25.0	22.2	24.7	26.8	20.4	22.8	28.5
	SHC	0.7	0.7	0.7	–0.0	–0.0	–0.0	–0.7	–0.7	–0.7
	kW	4.1	4.1	4.1	4.1	4.1	4.1	4.1	4.1	4.1
50	TC	22.4	24.4	26.2	24.0	26.0	27.9	22.4	24.5	29.3
	SHC	0.8	0.8	0.8	0.1	0.1	0.1	–0.4	–0.4	–0.4
	kW	4.1	4.1	4.1	4.1	4.1	4.1	4.2	4.2	4.2
40	TC	24.3	25.9	27.4	25.7	27.4	28.9	24.5	26.3	30.2
	SHC	0.8	0.8	0.8	0.3	0.3	0.3	–0.1	–0.1	–0.1
	kW	4.1	4.1	4.1	4.2	4.2	4.2	4.2	4.2	4.2

LEGEND

Edb – Entering Dry–Bulb
Ewb – Entering Wet–Bulb
kW – Compressor Motor Power Input
Idb – Leaving Dry–Bulb
Iwb – Leaving Wet–Bulb
SHC – Sensible Heat Capacity (1000 Btuh) Gross
TC – Total Capacity (1000 Btuh) Gross

NOTES:

1. Direct interpolation is permissible. Do not extrapolate.
2. The following formulas may be used:

$$t_{ldb} = t_{edb} - \frac{\text{sensible capacity (Btuh)}}{1.10 \times \text{cfm}}$$

t_{lwb} = Wet–bulb temperature corresponding to enthalpy of air leaving evaporator coil (h_{lwb})

$$h_{lwb} = h_{ewb} - \frac{\text{total capacity (Btuh)}}{4.5 \times \text{cfm}}$$

Where: h_{ewb} = Enthalpy of air entering evaporator coil

Table 20 – COOLING CAPACITIES 1–STAGE COOLING 7.5 TONS

RGS090 (RTPF)				AMBIENT TEMPERATURE											
				85			95			105			115		
				EAT (db)			EAT (db)			EAT (db)			EA (db)		
				75	80	85	75	80	85	75	80	85	75	80	85
2250 Cfm	EAT (wb)	58	TC	81.2	81.2	91.8	77.5	77.5	87.7	73.6	73.6	83.3	69.5	69.5	78.7
			SHC	70.5	81.2	91.8	67.3	77.5	87.7	63.9	73.6	83.3	60.4	69.5	78.7
		62	TC	86.9	86.9	86.9	82.3	82.3	84.0	77.2	77.2	81.5	71.9	71.9	78.8
			SHC	63.6	74.9	86.2	61.4	72.7	84.0	58.9	70.2	81.5	56.3	67.6	78.8
		67	TC	95.2	95.2	95.2	90.7	90.7	90.7	85.7	85.7	85.7	79.9	79.9	79.9
			SHC	52.8	64.2	75.6	50.9	62.2	73.6	48.8	60.1	71.5	46.3	57.6	68.9
		72	TC	103.5	103.5	103.5	98.9	98.9	98.9	93.8	93.8	93.8	87.3	87.3	87.3
			SHC	41.5	53.1	64.6	39.7	51.2	62.7	37.7	49.2	60.6	35.3	46.6	57.8
		76	TC	–	109.6	109.6	–	104.8	104.8	–	99.1	99.1	–	91.6	91.6
			SHC	–	43.7	56.0	–	42.0	54.3	–	40.0	52.4	–	37.4	49.8
2625 Cfm	EAT (wb)	58	TC	85.9	85.9	97.2	82.2	82.2	93.1	78.1	78.1	88.4	73.9	73.9	83.6
			SHC	74.6	85.9	97.2	71.4	82.2	93.1	67.9	78.1	88.4	64.1	73.9	83.6
		62	TC	89.6	89.6	94.1	85.1	85.1	91.7	80.1	80.1	89.1	74.6	74.6	86.0
			SHC	68.1	81.1	94.1	65.9	78.8	91.7	63.4	76.3	89.1	60.6	73.3	86.0
		67	TC	97.9	97.9	97.9	93.2	93.2	93.2	88.1	88.1	88.1	82.0	82.0	82.0
			SHC	55.7	68.7	81.7	53.7	66.7	79.8	51.6	64.6	77.6	49.0	62.0	74.9
		72	TC	106.0	106.0	106.0	101.3	101.3	101.3	95.9	95.9	95.9	89.0	89.0	89.0
			SHC	42.7	55.8	68.9	40.9	53.9	67.0	38.8	51.8	64.7	36.2	48.9	61.7
		76	TC	–	111.8	111.8	–	106.9	106.9	–	100.7	100.7	–	92.7	92.7
			SHC	–	45.3	59.8	–	43.6	58.0	–	41.4	55.6	–	38.7	52.6
3000 Cfm	EAT (wb)	58	TC	89.6	89.6	101.4	85.9	85.9	97.2	81.7	81.7	92.5	77.0	77.0	87.1
			SHC	77.9	89.6	101.4	74.6	85.9	97.2	71.0	81.7	92.5	66.9	77.0	87.1
		62	TC	91.8	91.8	101.1	87.2	87.2	98.6	82.3	82.3	95.5	77.1	77.1	90.6
			SHC	72.2	86.7	101.1	69.9	84.3	98.6	67.2	81.3	95.5	63.5	77.1	90.6
		67	TC	99.9	99.9	99.9	95.2	95.2	95.2	89.9	89.9	89.9	83.6	83.6	83.6
			SHC	58.3	72.9	87.5	56.4	71.0	85.5	54.2	68.8	83.4	51.6	66.1	80.5
		72	TC	107.9	107.9	107.9	103.0	103.0	103.0	97.3	97.3	97.3	90.1	90.1	90.1
			SHC	43.7	58.3	72.8	41.9	56.4	70.9	39.7	54.1	68.4	37.0	51.0	65.0
		76	TC	–	113.8	113.8	–	108.4	108.4	–	102.0	102.0	–	93.4	93.4
			SHC	–	46.7	62.5	–	44.8	60.4	–	42.6	57.9	–	39.6	54.7
3375 Cfm	EAT (wb)	58	TC	92.7	92.7	104.9	88.8	88.8	100.5	84.6	84.6	95.7	79.6	79.6	90.0
			SHC	80.5	92.7	104.9	77.1	88.8	100.5	73.4	84.6	95.7	69.1	79.6	90.0
		62	TC	93.7	93.7	107.3	89.1	89.1	104.7	84.6	84.6	99.5	79.6	79.6	93.6
			SHC	75.8	91.6	107.3	73.5	89.1	104.7	69.8	84.6	99.5	65.6	79.6	93.6
		67	TC	101.5	101.5	101.5	96.7	96.7	96.7	91.3	91.3	91.3	84.8	84.8	85.7
			SHC	60.8	76.9	93.0	58.8	74.9	91.0	56.7	72.8	88.9	53.9	69.8	85.7
		72	TC	109.4	109.4	109.4	104.3	104.3	104.3	98.4	98.4	98.4	90.9	90.9	90.9
			SHC	44.6	60.5	76.4	42.8	58.6	74.4	40.5	56.2	71.8	37.7	52.8	68.0
		76	TC	–	115.1	115.1	–	109.5	109.5	–	102.8	102.8	–	94.0	94.0
			SHC	–	47.8	64.9	–	45.9	62.7	–	43.5	60.1	–	40.4	56.5
3750 Cfm	EAT (wb)	58	TC	95.3	95.3	107.8	91.3	91.3	103.3	86.9	86.9	98.3	81.7	81.7	92.4
			SHC	82.7	95.3	107.8	79.3	91.3	103.3	75.5	86.9	98.3	70.9	81.7	92.4
		62	TC	95.5	95.5	112.2	91.3	91.3	107.4	87.0	87.0	102.2	81.7	81.7	96.0
			SHC	78.7	95.5	112.2	75.3	91.3	107.4	71.7	87.0	102.2	67.4	81.7	96.0
		67	TC	102.8	102.8	102.8	97.9	97.9	97.9	92.3	92.3	94.0	85.7	85.7	90.5
			SHC	63.1	80.6	98.2	61.2	78.7	96.3	59.0	76.5	94.0	56.0	73.2	90.5
		72	TC	110.6	110.6	110.6	105.4	105.4	105.4	99.2	99.2	99.2	91.5	91.5	91.5
			SHC	45.5	62.7	79.9	43.5	60.7	77.8	41.3	58.1	75.0	38.3	54.5	70.7
		76	TC	–	116.1	116.1	–	110.3	110.3	–	103.5	103.5	–	94.5	94.5
			SHC	–	48.9	67.0	–	46.8	64.8	–	44.4	62.0	–	41.1	58.1

LEGEND:

–	–	Do not operate in this region
Cfm	–	Cubic feet per minute (supply air)
EAT(db)	–	Entering air temperature (dry bulb)
EAT(wb)	–	Entering air temperature (wet bulb)
SHC	–	Sensible heat capacity
TC	–	Total capacity

Table 21 – COOLING CAPACITIES 2–STAGE COOLING 7.5 TONS

RGS090 (RTPF)				AMBIENT TEMPERATURE											
				85			95			105			115		
				EAT (db)			EAT (db)			EAT (db)			EA (db)		
				75	80	85	75	80	85	75	80	85	75	80	85
2250 Cfm	EAT (wb)	58	TC	77.4	77.4	87.8	73.8	73.8	83.8	70.1	70.1	79.5	66.0	66.0	74.9
			SHC	66.9	77.4	87.8	63.9	73.8	83.8	60.6	70.1	79.5	57.1	66.0	74.9
		62	TC	82.2	82.2	83.9	77.5	77.5	81.7	72.6	72.6	79.2	67.3	67.3	76.4
			SHC	60.8	72.4	83.9	58.6	70.1	81.7	56.3	67.7	79.2	53.6	65.0	76.4
		67	TC	90.1	90.1	90.1	86.0	86.0	86.0	81.4	81.4	81.4	75.9	75.9	75.9
			SHC	50.2	61.8	73.3	48.5	60.1	71.6	46.5	58.1	69.7	44.2	55.8	67.4
		72	TC	98.0	98.0	98.0	94.0	94.0	94.0	89.5	89.5	89.5	84.3	84.3	84.3
			SHC	39.1	50.7	62.4	37.5	49.2	60.9	35.8	47.5	59.2	33.8	45.5	57.2
		76	TC	–	104.3	104.3	–	100.4	100.4	–	95.9	95.9	–	90.7	90.7
			SHC	–	41.7	54.0	–	40.3	52.7	–	38.7	51.0	–	36.8	49.0
2625 Cfm	EAT (wb)	58	TC	82.1	82.1	93.2	78.4	78.4	89.0	74.4	74.4	84.4	70.0	70.0	79.5
			SHC	71.0	82.1	93.2	67.8	78.4	89.0	64.3	74.4	84.4	60.6	70.0	79.5
		62	TC	84.9	84.9	91.8	80.4	80.4	89.5	75.4	75.4	86.7	70.2	70.2	82.9
			SHC	65.4	78.6	91.8	63.2	76.3	89.5	60.6	73.7	86.7	57.6	70.2	82.9
		67	TC	92.5	92.5	92.5	88.3	88.3	88.3	83.6	83.6	83.6	78.3	78.3	78.3
			SHC	53.0	66.3	79.5	51.3	64.6	78.0	49.4	62.8	76.1	47.2	60.6	73.9
		72	TC	100.4	100.4	100.4	96.4	96.4	96.4	91.7	91.7	91.7	86.4	86.4	86.4
			SHC	40.2	53.5	66.7	38.7	52.0	65.3	36.9	50.3	63.7	35.0	48.4	61.8
		76	TC	–	106.5	106.5	–	102.6	102.6	–	98.0	98.0	–	92.7	92.7
			SHC	–	43.3	57.6	–	41.8	55.9	–	40.2	54.1	–	38.4	52.2
3000 Cfm	EAT (wb)	58	TC	85.7	85.7	97.3	82.2	82.2	93.3	78.0	78.0	88.6	73.5	73.5	83.4
			SHC	74.1	85.7	97.3	71.1	82.2	93.3	67.5	78.0	88.6	63.6	73.5	83.4
		62	TC	86.9	86.9	98.7	82.8	82.8	96.4	78.2	78.2	92.3	73.6	73.6	86.9
			SHC	69.3	84.0	98.7	67.2	81.8	96.4	64.1	78.2	92.3	60.3	73.6	86.9
		67	TC	94.3	94.3	94.3	90.1	90.1	90.1	85.2	85.2	85.2	79.8	79.8	80.1
			SHC	55.6	70.5	85.4	54.0	68.9	83.9	52.1	67.1	82.2	49.9	65.0	80.1
		72	TC	102.2	102.2	102.2	98.1	98.1	98.1	93.3	93.3	93.3	87.9	87.9	87.9
			SHC	41.2	56.0	70.7	39.7	54.6	69.5	38.0	53.0	68.0	36.0	51.1	66.2
		76	TC	–	108.1	108.1	–	104.2	104.2	–	99.5	99.5	–	94.2	94.2
			SHC	–	44.5	60.2	–	43.2	58.7	–	41.6	57.0	–	39.8	55.2
3375 Cfm	EAT (wb)	58	TC	88.5	88.5	100.4	85.0	85.0	96.4	81.0	81.0	92	76.5	76.5	86.8
			SHC	76.5	88.5	100.4	73.5	85.0	96.4	70.1	81.0	92	66.1	76.5	86.8
		62	TC	88.9	88.9	103.9	85.1	85.1	100.4	81.1	81.1	95.7	76.5	76.5	90.3
			SHC	72.3	88.1	103.9	69.7	85.1	100.4	66.5	81.1	95.7	62.7	76.5	90.3
		67	TC	95.8	95.8	95.8	91.5	91.5	91.5	86.6	86.6	87.9	81.1	81.1	85.8
			SHC	58.0	74.4	90.9	56.4	73.0	89.6	54.6	71.3	87.9	52.4	69.1	85.8
		72	TC	103.6	103.6	103.6	99.4	99.4	99.4	94.6	94.6	94.6	89.1	89.1	89.1
			SHC	42.0	58.3	74.5	40.6	57.0	73.4	38.9	55.5	72.0	37.0	53.7	70.3
		76	TC	–	109.2	109.2	–	105.4	105.4	–	100.7	100.7	–	95.3	95.3
			SHC	–	45.6	62.6	–	44.4	61.3	–	42.8	59.7	–	41.0	58.0
3750 Cfm	EAT (wb)	58	TC	90.8	90.8	103.0	87.3	87.3	99.1	83.3	83.3	94.5	78.8	78.8	89.4
			SHC	78.5	90.8	103.0	75.5	87.3	99.1	72.0	83.3	94.5	68.2	78.8	89.4
		62	TC	90.9	90.9	107.2	87.4	87.4	103.1	83.3	83.3	98.4	78.9	78.9	93.1
			SHC	74.5	90.9	107.2	71.6	87.4	103.1	68.3	83.3	98.4	64.7	78.9	93.1
		67	TC	97.0	97.0	97.0	92.6	92.6	95.1	87.6	87.6	93.4	82.1	82.1	91.2
			SHC	60.3	78.2	96.2	58.8	76.9	95.1	56.9	75.2	93.4	54.8	73.0	91.2
		72	TC	104.7	104.7	104.7	100.5	100.5	100.5	95.6	95.6	95.6	90.1	90.1	90.1
			SHC	42.9	60.5	78.1	41.4	59.3	77.1	39.8	57.8	75.9	37.9	56.1	74.3
		76	TC	–	110.2	110.2	–	106.2	106.2	–	101.6	101.6	–	96.1	96.1
			SHC	–	46.7	64.8	–	45.4	63.6	–	44.0	62.3	–	42.2	60.6

* See Minimum–Maximum Airflow Ratings in Table 7. Do not operate outside these limits.

LEGEND:

– – Do not operate in this region
Cfm – Cubic feet per minute (supply air)
EAT(db) – Entering air temperature (dry bulb)
EAT(wb) – Entering air temperature (wet bulb)
SHC – Sensible heat capacity
TC – Total capacity

Table 22 – COOLING CAPACITIES 2–STAGE COOLING 7.5 TONS

RGS090 COOLING CAPACITIES, UNIT WITH HOT GAS RE–HEAT SYSTEM IN SUBCOOLING MODE										
TEMP (F) AIR ENT CONDENSER (Edb)		AIR ENTERING EVAPORATOR – CFM								
		2250/0.05			3000/0.07			3750/0.09		
		Air Entering Evaporator – Ewb (F)								
		72	67	62	72	67	62	72	67	62
75	TC	103.05	93.02	83.60	109.77	99.52	90.08	114.01	103.69	95.19
	SHC	43.66	55.34	67.09	50.99	66.29	81.31	57.49	76.27	92.20
	kW	4.90	4.83	4.77	4.82	4.88	4.96	4.99	4.91	4.85
85	TC	95.39	85.83	76.88	101.59	91.89	82.95	105.53	95.76	87.77
	SHC	36.42	48.47	60.60	43.24	58.99	74.40	49.44	68.68	84.90
	kW	5.49	5.42	5.36	5.40	5.47	5.54	5.58	5.50	5.44
95	TC	87.48	78.44	69.97	93.21	84.05	75.61	96.84	87.63	80.14
	SHC	28.98	41.46	53.97	35.32	51.53	67.34	41.21	60.92	77.41
	kW	6.16	6.09	6.03	6.08	6.14	6.21	6.24	6.17	6.11
105	TC	79.35	70.83	62.84	84.57	75.96	68.04	87.88	79.23	72.26
	SHC	21.34	34.26	47.18	27.17	43.86	60.08	32.73	52.95	69.70
	kW	6.93	6.86	6.81	6.85	6.91	6.97	7.00	6.93	6.88
115	TC	70.87	62.89	55.42	75.58	67.54	60.15	78.56	70.51	64.06
	SHC	13.40	26.79	40.14	18.70	35.89	52.54	23.94	44.68	61.67
	kW	7.79	7.74	7.69	7.73	7.78	7.83	7.86	7.80	7.76

RGS090 COOLING CAPACITIES, UNIT WITH HOT GAS RE–HEAT SYSTEM IN HOT GAS REHEAT MODE										
TEMP (F) AIR ENT CONDENSER (Edb)		AIR ENTERING EVAPORATOR – Ewb (F)								
		75 Dry Bulb 62.5 Wet Bulb (50% Relative)			75 Dry Bulb 64 Wet Bulb (56% Relative)			75 Dry Bulb 65.3 Wet Bulb (60% Relative)		
		Air Entering Evaporator – Cfm								
		2250	3000	3750	2250	3000	3750	2250	3000	3750
80	TC	27.60	32.75	30.19	40.09	39.43	37.73	45.06	45.25	44.25
	SHC	–3.12	5.20	6.71	3.75	5.24	6.75	3.77	5.26	6.78
	kW	4.56	4.51	4.46	4.63	4.60	4.56	4.70	4.67	4.64
75	TC	35.40	33.78	31.20	41.14	40.51	38.80	46.15	46.37	45.38
	SHC	4.67	6.17	7.69	4.71	6.21	7.73	4.74	6.24	7.76
	kW	4.41	4.36	4.39	4.41	4.36	4.36	4.41	4.39	4.36
70	TC	36.36	34.71	32.18	42.10	41.47	39.77	47.08	47.31	46.32
	SHC	5.63	7.14	8.66	5.67	7.18	8.71	5.70	7.21	8.74
	kW	4.43	4.49	4.41	4.44	4.40	4.39	4.49	4.47	4.44
60	TC	38.25	36.64	34.15	43.97	43.37	41.72	48.98	49.22	48.26
	SHC	7.56	9.09	10.62	7.60	9.13	10.66	7.62	9.15	10.69
	kW	4.56	4.55	4.43	4.57	4.53	4.46	4.56	4.55	4.50
50	TC	40.15	38.60	36.14	45.95	45.37	43.73	50.57	50.97	49.56
	SHC	9.48	11.03	12.58	9.52	11.07	12.62	9.54	11.10	12.64
	kW	4.63	4.52	4.38	4.45	4.41	4.33	5.25	4.91	5.60
40	TC	42.18	40.62	38.11	47.80	47.25	45.43	52.65	52.75	51.83
	SHC	11.41	12.98	14.54	11.45	13.02	14.58	11.47	13.04	14.60
	kW	4.32	4.37	4.37	4.65	4.60	4.89	4.96	5.20	5.12

LEGEND

Edb – Entering Dry–Bulb
Ewb – Entering Wet–Bulb
kW – Compressor Motor Power Input
Idb – Leaving Dry–Bulb
Iwb – Leaving Wet–Bulb
SHC – Sensible Heat Capacity (1000 Btuh) Gross
TC – Total Capacity (1000 Btuh) Gross

NOTES:

1. Direct interpolation is permissible. Do not extrapolate.
2. The following formulas may be used:

$$t_{ldb} = t_{edb} - \frac{\text{sensible capacity (Btuh)}}{1.10 \times \text{cfm}}$$

t_{lwb} = Wet–bulb temperature corresponding to enthalpy of air leaving evaporator coil (h_{lwb})

$$h_{lwb} = h_{ewb} - \frac{\text{total capacity (Btuh)}}{4.5 \times \text{cfm}}$$

Where: h_{ewb} = Enthalpy of air entering evaporator coil

Table 23 – COOLING CAPACITIES 1–STAGE COOLING 8.5 TONS

RGS101 (RTPF)				AMBIENT TEMPERATURE											
				85			95			105			115		
				EAT (db)			EAT (db)			EAT (db)			EAT (db)		
				75	80	85	75	80	85	75	80	85	75	80	85
2550 Cfm	EAT (wb)	58	TC	88.1	88.1	99.9	84.1	84.1	95.3	79.6	79.6	90.3	74.9	74.9	84.9
			SHC	76.4	88.1	99.9	72.8	84.1	95.3	69.0	79.6	90.3	64.9	74.9	84.9
		62	TC	93.9	93.9	95.2	88.6	88.6	92.6	82.8	82.8	89.7	76.6	76.6	86.5
			SHC	69.4	82.3	95.2	66.8	79.7	92.6	64.1	76.9	89.7	61.0	73.8	86.5
		67	TC	103.8	103.8	103.8	98.7	98.7	98.7	93.0	93.0	93.0	86.7	86.7	86.7
			SHC	57.8	70.7	83.6	55.6	68.5	81.4	53.1	66.1	79.0	50.5	63.4	76.4
		72	TC	113.1	113.1	113.1	108.0	108.0	108.0	102.4	102.4	102.4	96.1	96.1	96.1
			SHC	45.2	58.3	71.3	43.2	56.3	69.3	41.1	54.1	67.1	38.7	51.7	64.7
		76	TC	–	119.9	119.9	–	114.7	114.7	–	109.0	109.0	–	102.7	102.7
			SHC	–	47.9	61.9	–	46.0	60.1	–	44.1	58.1	–	41.9	55.8
2975 Cfm	EAT (wb)	58	TC	93.6	93.6	106.1	89.3	89.3	101.2	84.6	84.6	96.0	79.6	79.6	90.3
			SHC	81.1	93.6	106.1	77.4	89.3	101.2	73.3	84.6	96.0	69.0	79.6	90.3
		62	TC	97.5	97.5	104.3	92.0	92.0	101.4	86.1	86.1	98.3	79.8	79.8	94.1
			SHC	74.7	89.5	104.3	72.0	86.7	101.4	69.1	83.7	98.3	65.6	79.8	94.1
		67	TC	106.7	106.7	106.7	101.5	101.5	101.5	95.7	95.7	95.7	89.2	89.2	89.2
			SHC	61.0	75.8	90.6	58.8	73.6	88.5	56.4	71.3	86.1	53.8	68.7	83.6
		72	TC	115.8	115.8	115.8	110.6	110.6	110.6	104.9	104.9	104.9	98.4	98.4	98.4
			SHC	46.5	61.3	76.2	44.5	59.4	74.2	42.3	57.2	72.1	40.0	54.8	69.7
		76	TC	–	122.4	122.4	–	117.0	117.0	–	111.1	111.1	–	104.5	104.5
			SHC	–	49.8	66.1	–	47.8	63.9	–	45.7	61.6	–	43.4	59.0
3400 Cfm	EAT (wb)	58	TC	98.1	98.1	111.3	93.7	93.7	106.2	88.9	88.9	100.8	83.7	83.7	94.9
			SHC	85.0	98.1	111.3	81.2	93.7	106.2	77.0	88.9	100.8	72.5	83.7	94.9
		62	TC	100.0	100.0	112.3	94.9	94.9	108.6	89.1	89.1	104.9	83.8	83.8	98.7
			SHC	79.3	95.8	112.3	76.3	92.5	108.6	73.2	89.1	104.9	68.8	83.8	98.7
		67	TC	109.0	109.0	109.0	103.6	103.6	103.6	97.6	97.6	97.6	91.0	91.0	91.0
			SHC	63.9	80.5	97.2	61.8	78.5	95.2	59.4	76.1	92.9	56.8	73.5	90.3
		72	TC	117.9	117.9	117.9	112.5	112.5	112.5	106.6	106.6	106.6	100.0	100.0	100.0
			SHC	47.6	64.1	80.6	45.6	62.1	78.7	43.4	60.0	76.6	41.1	57.6	74.2
		76	TC	–	124.2	124.2	–	118.6	118.6	–	112.5	112.5	–	105.7	105.7
			SHC	–	51.2	69.0	–	49.2	66.7	–	47.0	64.4	–	44.7	61.9
3825 Cfm	EAT (wb)	58	TC	101.6	101.6	115.1	97.2	97.2	110.1	92.3	92.3	104.6	87.0	87.0	98.6
			SHC	88.0	101.6	115.1	84.2	97.2	110.1	80.0	92.3	104.6	75.4	87.0	98.6
		62	TC	101.9	101.9	120.0	97.3	97.3	114.6	92.4	92.4	108.9	87.1	87.1	102.6
			SHC	83.7	101.8	120.0	79.9	97.3	114.6	75.9	92.4	108.9	71.6	87.1	102.6
		67	TC	110.7	110.7	110.7	105.3	105.3	105.3	99.2	99.2	99.3	92.5	92.5	96.7
			SHC	66.7	85.0	103.4	64.6	83.0	101.5	62.2	80.8	99.3	59.6	78.2	96.7
		72	TC	119.4	119.4	119.4	114.0	114.0	114.0	108.0	108.0	108.0	101.3	101.3	101.3
			SHC	48.5	66.6	84.6	46.6	64.7	82.7	44.4	62.6	80.7	42.1	60.2	78.4
		76	TC	–	125.5	125.5	–	119.8	119.8	–	113.6	113.6	–	106.7	106.7
			SHC	–	52.4	71.5	–	50.4	69.3	–	48.2	67.0	–	45.9	64.4
4250 Cfm	EAT (wb)	58	TC	104.4	104.4	118.3	99.9	99.9	113.2	95.0	95.0	107.6	89.5	89.5	101.5
			SHC	90.4	104.4	118.3	86.6	99.9	113.2	82.3	95.0	107.6	77.6	89.5	101.5
		62	TC	104.4	104.4	123.0	99.9	99.9	117.8	95.0	95.0	112.0	89.6	89.6	105.6
			SHC	85.8	104.4	123.0	82.1	99.9	117.8	78.1	95.0	112.0	73.6	89.6	105.6
		67	TC	112.1	112.1	112.1	106.6	106.6	107.5	100.4	100.4	105.3	93.6	93.6	102.7
			SHC	69.2	89.2	109.2	67.2	87.3	107.5	64.9	85.1	105.3	62.3	82.5	102.7
		72	TC	120.7	120.7	120.7	115.1	115.1	115.1	109.0	109.0	109.0	102.2	102.2	102.2
			SHC	49.4	68.9	88.4	47.4	67.0	86.5	45.3	64.9	84.6	42.9	62.6	82.3
		76	TC	–	126.6	126.6	–	120.8	120.8	–	114.5	114.5	–	107.4	107.4
			SHC	–	53.5	73.9	–	51.5	71.7	–	49.3	69.4	–	46.9	66.8

LEGEND:

–	–	Do not operate in this region
Cfm	–	Cubic feet per minute (supply air)
EAT(db)	–	Entering air temperature (dry bulb)
EAT(wb)	–	Entering air temperature (wet bulb)
SHC	–	Sensible heat capacity
TC	–	Total capacity

Table 24 – COOLING CAPACITIES 2–STAGE COOLING 8.5 TONS

RGS102 (RTPF)				Ambient Temperature											
				85			95			105			115		
				EA (dB)			EA (dB)			EA (dB)			EA (dB)		
				75	80	85	75	80	85	75	80	85	75	80	85
2550 Cfm	EAT (wb)	58	TC	89.7	89.7	101.6	85.2	85.2	96.5	79.6	79.6	90.1	73.8	73.8	83.6
			SHC	77.8	89.7	101.6	73.9	85.2	96.5	69.0	79.6	90.1	64.0	73.8	83.6
		62	TC	94.3	94.3	97.9	88.7	88.7	95.2	81.3	81.3	91.5	74.3	74.3	86.5
			SHC	71.0	84.4	97.9	68.2	81.7	95.2	64.7	78.1	91.5	60.6	73.6	86.5
		67	TC	105.0	105.0	105.0	99.3	99.3	99.3	92.2	92.2	92.2	84.1	84.1	84.1
			SHC	59.0	72.6	86.1	56.6	70.1	83.7	53.6	67.1	80.7	50.3	63.8	77.3
		72	TC	115.9	115.9	115.9	110.4	110.4	110.4	104.2	104.2	104.2	96.0	96.0	96.0
			SHC	46.4	60.0	73.6	44.3	57.9	71.5	41.9	55.5	69.1	38.8	52.4	65.9
		76	TC	–	123.7	123.7	–	118.3	118.3	–	112.4	112.4	–	105.7	105.7
			SHC	–	49.3	63.3	–	47.3	61.4	–	45.3	59.3	–	42.9	56.7
2975 Cfm	EAT (wb)	58	TC	95.3	95.3	107.9	90.7	90.7	102.7	84.8	84.8	96.1	78.7	78.7	89.1
			SHC	82.6	95.3	107.9	78.6	90.7	102.7	73.5	84.8	96.1	68.2	78.7	89.1
		62	TC	97.9	97.9	107.8	92.1	92.1	104.7	85.4	85.4	99.4	78.8	78.8	92.8
			SHC	76.7	92.2	107.8	73.9	89.3	104.7	69.6	84.5	99.4	64.8	78.8	92.8
		67	TC	108.5	108.5	108.5	102.6	102.6	102.6	95.4	95.4	95.4	86.9	86.9	86.9
			SHC	62.8	78.4	94.1	60.4	76.0	91.7	57.4	73.1	88.8	54.0	69.7	85.3
		72	TC	119.1	119.1	119.1	113.5	113.5	113.5	107.2	107.2	107.2	99.2	99.2	99.2
			SHC	47.9	63.5	79.2	45.8	61.5	77.1	43.5	59.2	74.9	40.6	56.3	72.0
		76	TC	–	126.4	126.4	–	120.8	120.8	–	114.8	114.8	–	108.2	108.2
			SHC	–	51.1	67.4	–	49.2	65.3	–	47.0	63.0	–	44.8	60.7
3400 Cfm	EAT (wb)	58	TC	100.0	100.0	113.3	95.2	95.2	107.9	89.3	89.3	101.1	82.9	82.9	93.9
			SHC	86.7	100.0	113.3	82.6	95.2	107.9	77.4	89.3	101.1	71.8	82.9	93.9
		62	TC	101.1	101.1	115.8	95.7	95.7	111.7	89.4	89.4	105.3	83.0	83.0	97.7
			SHC	81.5	98.7	115.8	78.2	94.9	111.7	73.5	89.4	105.3	68.2	83.0	97.7
		67	TC	111.1	111.1	111.1	105.1	105.1	105.1	97.8	97.8	97.8	89.1	89.1	93.0
			SHC	66.2	83.9	101.6	63.9	81.6	99.3	61.0	78.7	96.5	57.5	75.3	93.0
		72	TC	121.3	121.3	121.3	115.6	115.6	115.6	109.4	109.4	109.4	101.5	101.5	101.5
			SHC	49.2	66.7	84.3	47.1	64.7	82.3	44.9	62.5	80.2	42.1	59.9	77.7
		76	TC	–	128.3	128.3	–	122.6	122.6	–	116.3	116.3	–	109.7	109.7
			SHC	–	52.7	70.7	–	50.7	68.6	–	48.6	66.4	–	46.4	64.2
3825 Cfm	EAT (wb)	58	TC	104.0	104.0	117.8	99.1	99.1	112.3	93.2	93.2	105.5	86.5	86.5	97.9
			SHC	90.2	104.0	117.8	86.0	99.1	112.3	80.8	93.2	105.5	75.0	86.5	97.9
		62	TC	104.2	104.2	122.7	99.3	99.3	116.9	93.3	93.3	109.8	86.6	86.6	101.9
			SHC	85.7	104.2	122.7	81.7	99.3	116.9	76.7	93.3	109.8	71.2	86.6	101.9
		67	TC	113.1	113.1	113.1	107.1	107.1	107.1	99.9	99.9	103.8	91.0	91.0	100.3
			SHC	69.4	89.1	108.8	67.1	86.8	106.5	64.3	84.1	103.8	60.9	80.6	100.3
		72	TC	123.0	123.0	123.0	117.2	117.2	117.2	110.9	110.9	110.9	103.3	103.3	103.3
			SHC	50.3	69.7	89.0	48.3	67.7	87.1	46.1	65.6	85.2	43.5	63.3	83.0
		76	TC	–	129.7	129.7	–	124.0	124.0	–	117.5	117.5	–	110.8	110.8
			SHC	–	54.0	73.7	–	52.1	71.7	–	50.0	69.5	–	47.8	67.4
4250 Cfm	EAT (wb)	58	TC	107.4	107.4	121.7	102.5	102.5	116.1	96.5	96.5	109.3	89.5	89.5	101.4
			SHC	93.1	107.4	121.7	88.9	102.5	116.1	83.7	96.5	109.3	77.6	89.5	101.4
		62	TC	107.5	107.5	126.6	102.6	102.6	120.8	96.6	96.6	113.7	89.6	89.6	105.5
			SHC	88.4	107.5	126.6	84.4	102.6	120.8	79.5	96.6	113.7	73.7	89.6	105.5
		67	TC	114.7	114.7	115.6	108.7	108.7	113.5	101.7	101.7	110.8	92.6	92.6	107.2
			SHC	72.5	94.0	115.6	70.2	91.8	113.5	67.5	89.2	110.8	64.0	85.6	107.2
		72	TC	124.3	124.3	124.3	118.5	118.5	118.5	112.1	112.1	112.1	104.7	104.7	104.7
			SHC	51.3	72.4	93.4	49.3	70.5	91.7	47.2	68.5	89.9	44.7	66.4	88.1
		76	TC	–	130.7	130.7	–	125.0	125.0	–	118.5	118.5	–	111.6	111.6
			SHC	–	55.3	76.5	–	53.5	74.6	–	51.3	72.4	–	49.2	70.3

* See Minimum–Maximum Airflow Ratings in Table 7. Do not operate outside these limits.

LEGEND:

– – Do not operate in this region
Cfm – Cubic feet per minute (supply air)
EAT(db) – Entering air temperature (dry bulb)
EAT(wb) – Entering air temperature (wet bulb)
SHC – Sensible heat capacity
TC – Total capacity

RGS102 COOLING CAPACITIES, UNIT WITH HOT GAS RE–HEAT SYSTEM IN SUBCOOLING MODE										
TEMP (F) AIR ENT CONDENSER (Edb)		AIR ENTERING EVAPORATOR – CFM								
		2550/0.04			3400/0.05			4250/0.07		
		Air Entering Evaporator – Ewb (F)								
		72	67	62	72	67	62	72	67	62
75	TC	119.20	107.44	96.41	126.95	114.98	103.92	131.87	119.81	109.54
	SHC	50.63	63.94	77.40	59.17	76.72	94.21	66.80	88.44	108.22
	kW	5.67	5.57	5.47	5.54	5.63	5.74	5.79	5.68	5.59
85	TC	110.40	99.22	88.76	117.63	106.26	95.77	122.21	110.77	101.07
	SHC	42.39	56.16	70.07	50.42	68.45	86.38	57.71	79.86	99.95
	kW	6.33	6.23	6.14	6.20	6.30	6.40	6.45	6.34	6.25
95	TC	101.37	90.79	80.86	108.07	97.31	87.39	112.29	101.47	92.38
	SHC	33.97	48.22	62.56	41.46	60.01	78.39	48.40	71.09	91.47
	kW	7.08	6.99	6.90	6.96	7.05	7.16	7.20	7.09	7.01
105	TC	92.04	82.06	72.71	98.19	88.05	78.72	102.07	91.86	83.40
	SHC	25.31	40.06	54.88	32.24	51.33	70.17	38.85	62.06	82.67
	kW	7.94	7.85	7.77	7.83	7.91	8.01	8.06	7.95	7.87
115	TC	82.37	73.01	64.24	87.95	78.45	69.73	91.46	81.90	74.09
	SHC	16.38	31.65	46.95	22.71	42.37	61.69	28.94	52.74	73.52
	kW	8.92	8.84	8.77	8.82	8.89	8.98	9.02	8.93	8.86

RGS102 COOLING CAPACITIES, UNIT WITH HOT GAS RE–HEAT SYSTEM IN HOT GAS REHEAT MODE										
TEMP (F) AIR ENT CONDENSER (Edb)		AIR ENTERING EVAPORATOR – Ewb (F)								
		75 Dry Bulb 62.5 Wet Bulb (50% Relative)			75 Dry Bulb 64 Wet Bulb (56% Relative)			75 Dry Bulb 65.3 Wet Bulb (60% Relative)		
		Air Entering Evaporator – Cfm								
		2550	3400	4250	2550	3400	4250	2550	3400	4250
80	TC	37.61	33.13	26.77	44.74	41.60	36.46	50.96	48.99	44.93
	SHC	–0.52	–0.63	–0.73	–0.46	–0.57	–0.67	–0.42	–0.53	–0.62
	kW	5.88	5.68	5.44	6.13	5.97	5.76	6.35	6.24	6.06
75	TC	38.71	34.24	27.86	45.84	42.73	37.59	52.05	50.11	46.06
	SHC	0.45	0.34	0.25	0.50	0.40	0.31	0.54	0.44	0.36
	kW	5.68	5.47	5.22	5.94	5.78	5.56	6.18	6.07	5.88
70	TC	39.70	35.25	28.83	46.80	43.70	38.59	52.97	51.04	47.02
	SHC	1.41	1.32	1.23	1.47	1.37	1.29	1.50	1.41	1.34
	kW	5.65	5.42	5.24	5.97	5.79	5.53	6.26	6.13	5.91
60	TC	41.77	37.33	30.76	48.86	45.80	40.71	55.00	53.10	49.12
	SHC	3.34	3.26	3.18	3.40	3.32	3.25	3.43	3.36	3.29
	kW	5.42	5.15	5.17	5.80	5.59	5.30	6.16	6.01	5.75
50	TC	43.83	39.27	32.61	50.92	47.89	42.70	57.04	55.16	51.22
	SHC	5.27	5.21	5.14	5.32	5.27	5.21	5.36	5.31	5.25
	kW	5.18	5.15	5.17	5.62	5.39	5.05	6.04	5.87	5.59
40	TC	45.75	41.13	34.50	53.08	50.00	44.64	59.24	57.40	53.44
	SHC	7.20	7.15	6.95	7.26	7.21	7.16	7.29	7.25	7.21
	kW	4.79	4.98	4.80	5.25	5.01	5.23	5.68	5.51	5.21

LEGEND

Edb – Entering Dry–Bulb
Ewb – Entering Wet–Bulb
kW – Compressor Motor Power Input
Idb – Leaving Dry–Bulb
Iwb – Leaving Wet–Bulb
SHC – Sensible Heat Capacity (1000 Btuh) Gross
TC – Total Capacity (1000 Btuh) Gross

NOTES:

1. Direct interpolation is permissible. Do not extrapolate.
2. The following formulas may be used:

$$t_{ldb} = t_{edb} - \frac{\text{sensible capacity (Btuh)}}{1.10 \times \text{cfm}}$$

t_{lwb} = Wet–bulb temperature corresponding to enthalpy of air leaving evaporator coil (h_{lwb})

$$h_{lwb} = h_{ewb} - \frac{\text{total capacity (Btuh)}}{4.5 \times \text{cfm}}$$

Where: h_{ewb} = Enthalpy of air entering evaporator coil

Table 26 – COOLING CAPACITIES 1–STAGE COOLING 10 TONS

RGS121 (RTPF)				AMBIENT TEMPERATURE											
				85			95			105			115		
				EAT (db)			EAT (db)			EAT (db)			EAT (db)		
				75	80	85	75	80	85	75	80	85	75	80	85
3000 Cfm	EAT (wb)	58	TC	106.3	106.3	120.5	101.7	101.7	115.2	96.6	96.6	109.4	91.0	91.0	103.1
			SHC	92.2	106.3	120.5	88.2	101.7	115.2	83.8	96.6	109.4	78.9	91.0	103.1
		62	TC	112.5	112.5	115.2	106.5	106.5	112.3	99.9	99.9	109.0	92.7	92.7	105.2
			SHC	83.8	99.5	115.2	81.0	96.6	112.3	77.8	93.4	109.0	74.2	89.7	105.2
		67	TC	123.5	123.5	123.5	117.8	117.8	117.8	111.3	111.3	111.3	104.0	104.0	104.0
			SHC	69.2	85.0	100.7	66.8	82.5	98.3	64.1	79.8	95.5	61.0	76.8	92.5
		72	TC	134.3	134.3	134.3	128.5	128.5	128.5	122.0	122.0	122.0	114.7	114.7	114.7
			SHC	53.8	69.6	85.5	51.6	67.4	83.2	49.1	64.9	80.7	46.3	62.1	77.9
		76	TC	–	142.4	142.4	–	136.3	136.3	–	129.5	129.5	–	121.8	121.8
			SHC	–	56.8	73.3	–	54.7	71.2	–	52.3	68.8	–	49.7	66.2
3500 Cfm	EAT (wb)	58	TC	112.9	112.9	127.8	108.0	108.0	122.3	102.7	102.7	116.3	96.8	96.8	109.7
			SHC	97.9	112.9	127.8	93.6	108.0	122.3	89.0	102.7	116.3	83.9	96.8	109.7
		62	TC	116.3	116.3	126.2	110.5	110.5	123.3	103.8	103.8	119.5	97.1	97.1	114.3
			SHC	90.2	108.2	126.2	87.4	105.3	123.3	84.0	101.8	119.5	79.8	97.1	114.3
		67	TC	126.9	126.9	126.9	120.9	120.9	120.9	114.3	114.3	114.3	106.8	106.8	106.8
			SHC	73.2	91.3	109.4	70.8	88.9	107.1	68.1	86.2	104.4	65.0	83.2	101.3
		72	TC	137.5	137.5	137.5	131.4	131.4	131.4	124.7	124.7	124.7	117.2	117.2	117.2
			SHC	55.3	73.4	91.5	53.1	71.1	89.2	50.6	68.7	86.7	47.8	65.9	83.9
		76	TC	–	145.1	145.1	–	138.8	138.8	–	131.7	131.7	–	123.6	123.6
			SHC	–	59.0	78.2	–	56.7	75.8	–	54.3	73.1	–	51.5	70.0
4000 Cfm	EAT (wb)	58	TC	117.8	117.8	133.5	113.0	113.0	128.0	107.5	107.5	121.8	101.5	101.5	115.0
			SHC	102.2	117.8	133.5	98.0	113.0	128.0	93.3	107.5	121.8	88.0	101.5	115.0
		62	TC	119.1	119.1	136.0	113.5	113.5	132.5	107.7	107.7	126.7	101.6	101.6	119.6
			SHC	95.8	115.9	136.0	92.8	112.6	132.5	88.6	107.7	126.7	83.6	101.6	119.6
		67	TC	129.4	129.4	129.4	123.3	123.3	123.3	116.5	116.5	116.5	108.9	108.9	109.8
			SHC	76.9	97.3	117.7	74.5	95.0	115.4	71.8	92.3	112.8	68.8	89.3	109.8
		72	TC	139.7	139.7	139.7	133.5	133.5	133.5	126.6	126.6	126.6	118.8	118.8	118.8
			SHC	56.7	76.8	97.0	54.4	74.6	94.7	51.9	72.1	92.3	49.1	69.3	89.5
		76	TC	–	147.0	147.0	–	140.5	140.5	–	133.2	133.2	–	124.9	124.9
			SHC	–	60.6	81.7	–	58.4	79.3	–	55.8	76.5	–	53.0	73.5
4500 Cfm	EAT (wb)	58	TC	121.7	121.7	137.9	116.8	116.8	132.3	111.2	111.2	126.0	105.0	105.0	118.9
			SHC	105.6	121.7	137.9	101.3	116.8	132.3	96.4	111.2	126.0	91.0	105.0	118.9
		62	TC	121.8	121.8	143.4	116.9	116.9	137.6	111.3	111.3	131.0	105.1	105.1	123.7
			SHC	100.2	121.8	143.4	96.1	116.9	137.6	91.6	111.3	131.0	86.5	105.1	123.7
		67	TC	131.3	131.3	131.3	125.1	125.1	125.1	118.2	118.2	120.8	110.5	110.5	117.7
			SHC	80.3	102.9	125.5	78.0	100.7	123.3	75.3	98.0	120.8	72.3	95.0	117.7
		72	TC	141.5	141.5	141.5	135.1	135.1	135.1	128.0	128.0	128.0	120.1	120.1	120.1
			SHC	57.9	80.0	102.1	55.6	77.7	99.9	53.1	75.2	97.4	50.3	72.4	94.6
		76	TC	–	148.3	148.3	–	141.8	141.8	–	134.3	134.3	–	125.8	125.8
			SHC	–	62.1	84.9	–	59.8	82.5	–	57.3	79.7	–	54.4	76.6
5000 Cfm	EAT (wb)	58	TC	125.0	125.0	141.6	120.0	120.0	135.9	114.3	114.3	129.5	107.9	107.9	122.3
			SHC	108.4	125.0	141.6	104.0	120.0	135.9	99.1	114.3	129.5	93.6	107.9	122.3
		62	TC	125.1	125.1	147.2	120.1	120.1	141.4	114.4	114.4	134.7	108.0	108.0	127.2
			SHC	102.9	125.1	147.2	98.8	120.1	141.4	94.1	114.4	134.7	88.9	108.0	127.2
		67	TC	132.8	132.8	133.0	126.5	126.5	130.8	119.6	119.6	128.2	111.8	111.8	125.1
			SHC	83.6	108.3	133.0	81.2	106.0	130.8	78.6	103.4	128.2	75.6	100.3	125.1
		72	TC	142.8	142.8	142.8	136.3	136.3	136.3	129.1	129.1	129.1	121.1	121.1	121.1
			SHC	59.0	82.9	106.9	56.7	80.7	104.7	54.1	78.2	102.2	51.3	75.4	99.4
		76	TC	–	149.4	149.4	–	142.8	142.8	–	135.1	135.1	–	126.5	126.5
			SHC	–	63.4	87.9	–	61.2	85.5	–	58.6	82.7	–	55.6	79.4

LEGEND:

–	–	Do not operate in this region
Cfm	–	Cubic feet per minute (supply air)
EAT(db)	–	Entering air temperature (dry bulb)
EAT(wb)	–	Entering air temperature (wet bulb)
SHC	–	Sensible heat capacity
TC	–	Total capacity

Table 27 – COOLING CAPACITIES 2–STAGE COOLING 10 TONS

RGS120 (RTPF)				AMBIENT TEMPERATURE											
				85			95			105			115		
				EAT (db)			EAT (db)			EAT (db)			EAT (db)		
				75	80	85	75	80	85	75	80	85	75	80	85
3000 Cfm	EAT (wb)	58	TC	107.6	107.6	121.9	102.5	102.5	116.2	96.8	96.8	109.7	90.5	90.5	102.6
			SHC	93.2	107.6	121.9	88.8	102.5	116.2	83.9	96.8	109.7	78.4	90.5	102.6
		62	TC	113.6	113.6	116.5	107.1	107.1	113.4	99.7	99.7	109.8	91.8	91.8	104.9
			SHC	84.6	100.6	116.5	81.5	97.4	113.4	78.0	93.9	109.8	73.7	89.3	104.9
		67	TC	124.4	124.4	124.4	118.4	118.4	118.4	111.5	111.5	111.5	103.3	103.3	103.3
			SHC	69.7	85.7	101.7	67.1	83.2	99.2	64.3	80.3	96.3	60.8	76.8	92.8
		72	TC	135.8	135.8	135.8	129.7	129.7	129.7	122.8	122.8	122.8	115	115	115
			SHC	54.3	70.4	86.6	52.0	68.1	84.2	49.3	65.4	81.6	46.4	62.5	78.6
		76	TC	–	145.3	145.3	–	139	139	–	131.9	131.9	–	124.1	124.1
			SHC	–	57.8	74.3	–	55.6	72.1	–	53.1	69.6	–	50.4	66.9
3500 Cfm	EAT (wb)	58	TC	114.2	114.2	129.4	108.9	108.9	123.4	102.9	102.9	116.6	96.3	96.3	109.1
			SHC	98.9	114.2	129.4	94.3	108.9	123.4	89.1	102.9	116.6	83.4	96.3	109.1
		62	TC	117.2	117.2	127.9	111.0	111.0	124.7	104.0	104.0	119.5	96.5	96.5	113.7
			SHC	91.1	109.5	127.9	88.1	106.4	124.7	83.9	101.7	119.5	79.3	96.5	113.7
		67	TC	127.8	127.8	127.8	121.7	121.7	121.7	114.5	114.5	114.5	106.6	106.6	106.6
			SHC	73.8	92.3	110.8	71.3	89.8	108.3	68.4	87.0	105.5	65.2	83.8	102.3
		72	TC	139.4	139.4	139.4	133.0	133.0	133	125.8	125.8	125.8	117.9	117.9	117.9
			SHC	56.0	74.6	93.1	53.7	72.2	90.8	51.0	69.6	88.2	48.1	66.7	85.4
		76	TC	–	148.8	148.8	–	142.2	142.2	–	134.9	134.9	–	126.8	126.8
			SHC	–	60.2	79.5	–	58.0	77.1	–	55.4	74.5	–	52.7	71.6
4000 Cfm	EAT (wb)	58	TC	119.0	119.0	134.9	114.0	114.0	129.2	108.0	108.0	122.4	101.1	101.1	114.6
			SHC	103.1	119.0	134.9	98.7	114.0	129.2	93.6	108.0	122.4	87.6	101.1	114.6
		62	TC	120.3	120.3	137.1	114.7	114.7	132.8	108.2	108.2	127.5	101.3	101.3	119.3
			SHC	96.5	116.8	137.1	93.0	112.9	132.8	88.9	108.2	127.5	83.2	101.3	119.3
		67	TC	130.5	130.5	130.5	124.1	124.1	124.1	116.8	116.8	116.8	108.7	108.7	111.1
			SHC	77.7	98.6	119.5	75.2	96.2	117.2	72.3	93.3	114.4	69.1	90.1	111.1
		72	TC	142.1	142.1	142.1	135.5	135.5	135.5	128.2	128.2	128.2	120.0	120.0	120.0
			SHC	57.6	78.4	99.3	55.2	76.1	97.1	52.5	73.6	94.6	49.7	70.7	91.8
		76	TC	–	151.4	151.4	–	144.7	144.7	–	137.1	137.1	–	–	–
			SHC	–	62.3	83.8	–	60.0	81.4	–	57.5	78.8	–	–	–
4500 Cfm	EAT (wb)	58	TC	123.0	123.0	139.5	117.8	117.8	133.6	111.9	111.9	126.9	105.3	105.3	119.3
			SHC	106.6	123.0	139.5	102.1	117.8	133.6	97.0	111.9	126.9	91.2	105.3	119.3
		62	TC	123.4	123.4	144.4	117.9	117.9	139.0	112.0	112.0	132.0	105.4	105.4	124.2
			SHC	100.9	122.7	144.4	96.9	117.9	139	92.1	112.0	132	86.6	105.4	124.2
		67	TC	132.6	132.6	132.6	126.0	126	126.0	118.7	118.7	122.9	110.4	110.4	119.6
			SHC	81.4	104.6	127.9	78.9	102.3	125.7	76.1	99.5	122.9	72.9	96.2	119.6
		72	TC	144.2	144.2	144.2	137.4	137.4	137.4	129.9	129.9	129.9	121.6	121.6	121.6
			SHC	59.0	82.1	105.2	56.6	79.8	103.1	54.0	77.3	100.7	51.1	74.5	98
		76	TC	–	153.4	153.4	–	146.6	146.6	–	138.9	138.9	–	–	–
			SHC	–	64.1	87.8	–	61.9	85.6	–	59.4	83	–	–	–
5000 Cfm	EAT (wb)	58	TC	126.5	126.5	143.3	121.2	121.2	137.4	115.1	115.1	130.5	108.4	108.4	122.8
			SHC	109.6	126.5	143.3	105.0	121.2	137.4	99.8	115.1	130.5	93.9	108.4	122.8
		62	TC	126.5	126.5	149.1	121.3	121.3	142.9	115.2	115.2	135.8	108.5	108.5	127.8
			SHC	104.0	126.5	149.1	99.7	121.3	142.9	94.7	115.2	135.8	89.1	108.5	127.8
		67	TC	134.2	134.2	135.9	127.5	127.5	133.8	120.1	120.1	131.0	111.9	111.9	127.6
			SHC	84.9	110.4	135.9	82.4	108.1	133.8	79.6	105.3	131	76.4	102.0	127.6
		72	TC	145.8	145.8	145.8	139.0	139.0	139.0	131.3	131.3	131.3	122.9	122.9	122.9
			SHC	60.3	85.6	110.8	57.9	83.4	108.9	55.3	81.0	106.6	52.5	78.2	104
		76	TC	–	155.1	155.1	–	148.2	148.2	–	–	–	–	–	–
			SHC	–	65.9	91.5	–	63.7	89.5	–	–	–	–	–	–

* See Minimum–Maximum Airflow Ratings in Table 7. Do not operate outside these limits.

LEGEND:

– – Do not operate in this region
Cfm – Cubic feet per minute (supply air)
EAT(db) – Entering air temperature (dry bulb)
EAT(wb) – Entering air temperature (wet bulb)
SHC – Sensible heat capacity
TC – Total capacity

Table 28 – COOLING CAPACITIES 2–STAGE COOLING 10 TONS

RGS120 COOLING CAPACITIES, UNIT WITH HOT GAS RE–HEAT SYSTEM IN SUBCOOLING MODE										
TEMP (F) AIR ENT CONDENSER (Edb)		AIR ENTERING EVAPORATOR – CFM								
		3000/0.04			4000/0.06			5000/0.07		
		Air Entering Evaporator – Ewb (F)								
		72	67	62	72	67	62	72	67	62
75	TC	142.85	129.44	116.93	152.09	138.44	125.76	157.99	144.23	132.06
	SHC	58.38	74.88	91.58	67.96	89.45	111.02	76.63	102.94	127.93
	kW	7.19	6.97	6.79	6.92	7.12	7.35	7.45	7.22	7.02
85	TC	132.33	119.68	107.86	140.92	128.03	116.10	146.41	133.41	121.98
	SHC	48.44	65.56	82.83	57.37	79.50	101.68	65.65	92.58	118.12
	kW	7.98	7.77	7.58	7.72	7.92	8.14	8.25	8.01	7.82
95	TC	121.41	109.52	98.43	129.35	117.22	106.04	134.43	122.20	111.50
	SHC	38.19	55.92	73.78	46.47	69.22	92.01	54.34	81.92	107.96
	kW	8.87	8.66	8.48	8.61	8.80	9.03	9.14	8.90	8.71
105	TC	110.04	98.92	88.56	117.27	105.94	95.53	121.88	110.46	100.54
	SHC	27.59	45.94	64.39	35.16	58.57	81.98	42.56	70.82	97.40
	kW	9.86	9.66	9.48	9.61	9.79	10.02	10.12	9.89	9.70
115	TC	98.09	87.74	78.13	104.62	94.08	84.45	108.76	98.13	89.01
	SHC	16.52	35.47	54.53	23.37	47.44	71.46	30.32	59.25	86.31
	kW	10.95	10.76	10.60	10.72	10.89	11.10	11.19	10.98	10.81

RGS120 COOLING CAPACITIES, UNIT WITH HOT GAS RE–HEAT SYSTEM IN HOT GAS REHEAT MODE										
TEMP (F) AIR ENT CONDENSER (Edb)		AIR ENTERING EVAPORATOR – Ewb (F)								
		75 Dry Bulb 62.5 Wet Bulb (50% Relative)			75 Dry Bulb 64 Wet Bulb (56% Relative)			75 Dry Bulb 65.3 Wet Bulb (60% Relative)		
		Air Entering Evaporator – Cfm								
		3000	4000	5000	3000	4000	5000	3000	4000	5000
80	TC	44.78	39.41	31.89	53.22	49.44	43.38	60.56	58.12	53.32
	SHC	–0.44	–0.57	–0.69	–0.37	–0.51	–0.61	–0.33	–0.46	–0.56
	kW	6.96	6.77	6.52	7.26	7.13	6.91	7.54	7.45	7.27
75	TC	45.84	40.46	32.86	54.28	50.51	44.45	61.61	59.19	54.40
	SHC	0.53	0.40	0.29	0.60	0.47	0.37	0.64	0.52	0.42
	kW	6.77	6.56	6.29	7.11	6.95	6.72	7.41	7.31	7.12
70	TC	46.91	41.48	33.50	55.36	51.59	45.50	62.69	60.28	55.49
	SHC	1.51	1.38	1.27	1.57	1.45	1.35	1.61	1.50	1.40
	kW	6.54	6.32	6.02	6.90	6.74	6.49	7.23	7.13	6.92
60	TC	48.88	43.42	35.76	57.29	53.56	47.48	64.56	62.16	57.42
	SHC	3.44	3.34	3.24	3.51	3.40	3.31	3.55	3.45	3.37
	kW	6.45	6.16	6.70	6.93	6.72	6.39	7.38	7.24	6.96
50	TC	50.83	45.28	37.67	59.22	55.52	49.43	66.05	64.03	59.34
	SHC	5.38	5.29	5.20	5.45	5.36	5.28	5.48	5.40	5.33
	kW	6.46	6.01	6.34	6.98	6.71	6.29	8.15	7.38	7.02
40	TC	52.82	47.29	39.50	61.14	57.48	51.39	68.23	65.88	61.25
	SHC	7.32	7.24	7.20	7.38	7.31	7.24	7.43	7.36	7.29
	kW	6.29	6.09	6.12	7.05	6.72	6.29	7.78	7.55	7.10

LEGEND

Edb – Entering Dry–Bulb
Ewb – Entering Wet–Bulb
kW – Compressor Motor Power Input
Idb – Leaving Dry–Bulb
Iwb – Leaving Wet–Bulb
SHC – Sensible Heat Capacity (1000 Btuh) Gross
TC – Total Capacity (1000 Btuh) Gross

NOTES:

1. Direct interpolation is permissible. Do not extrapolate.
2. The following formulas may be used:

$$t_{ldb} = t_{edb} - \frac{\text{sensible capacity (Btuh)}}{1.10 \times \text{cfm}}$$

t_{lwb} = Wet–bulb temperature corresponding to enthalpy of air leaving evaporator coil (h_{lwb})

$$h_{lwb} = h_{ewb} - \frac{\text{total capacity (Btuh)}}{4.5 \times \text{cfm}}$$

Where: h_{ewb} = Enthalpy of air entering evaporator coil

Table 29 – COOLING CAPACITIES 2–STAGE COOLING 12.5 TONS

RGS150 (RTPF)				AMBIENT TEMPERATURE											
				85			95			105			115		
				EAT (db)			EAT (db)			EAT (db)			EAT (db)		
				75	80	85	75	80	85	75	80	85	75	80	85
3600 Cfm	EAT (wb)	58	TC	127.6	127.6	142.9	121.7	121.7	137.6	115.0	115.0	130	108.3	108.3	122.6
			SHC	110.3	126.6	142.9	105.8	121.7	137.6	99.9	115.0	130	94.1	108.3	122.6
		62	TC	136.1	136.1	136.1	131.1	131.1	131.1	123.8	123.8	124.5	114.9	114.9	120.3
			SHC	96.6	112.8	129.0	94.7	111.2	127.7	91.4	108.0	124.5	87.3	103.8	120.3
		67	TC	146.2	146.2	146.2	142.0	142.0	142.0	136.2	136.2	136.2	128.8	128.8	128.8
			SHC	78.5	94.4	110.3	76.9	93.1	109.2	74.7	91.0	107.3	71.7	88.1	104.6
		72	TC	155.9	155.9	155.9	152.4	152.4	152.4	147.2	147.2	147.2	140.1	140.1	140.1
			SHC	60.1	76.6	93.2	58.7	75.2	91.7	56.8	73.3	89.7	54.2	70.6	87.0
		76	TC	–	163.0	163	–	160.0	160	–	155.1	155.1	–	148.2	148.2
			SHC	–	62.0	81.8	–	61.1	80.9	–	59.5	79.3	–	57.0	76.3
4200 Cfm	EAT (wb)	58	TC	132.2	132.2	149.5	128.2	128.2	144.9	121.9	121.9	137.8	115.0	115.0	130.1
			SHC	115.0	132.2	149.5	111.5	128.2	144.9	106.0	121.9	137.8	99.9	115.0	130.1
		62	TC	139.6	139.6	139.6	134.7	134.7	138	128.0	128.0	135.6	119.1	119.1	131.2
			SHC	102.5	120.8	139	100.8	119.4	138	98.1	116.8	135.6	93.9	112.6	131.2
		67	TC	149.5	149.5	149.5	145.4	145.4	145.4	139.6	139.6	139.6	132.1	132.1	132.1
			SHC	81.8	99.6	117.4	80.6	98.7	116.8	78.5	96.9	115.2	75.7	94.3	112.8
		72	TC	159.0	159.0	159.0	155.5	155.5	155.5	150.3	150.3	150.3	143.1	143.1	143.1
			SHC	61.4	79.6	97.8	60.2	78.5	96.8	58.3	76.7	95	55.8	74.2	92.5
		76	TC	–	165.7	165.7	–	162.8	162.8	–	157.8	157.8	–	150.8	150.8
			SHC	–	64.6	87.7	–	63.5	86.3	–	61.5	83.3	–	58.9	79.9
4800 Cfm	EAT (wb)	58	TC	136.7	136.7	154.5	133.0	133.0	150.3	127.7	127.7	144.3	120.6	120.6	136.4
			SHC	118.9	136.7	154.5	115.7	133.0	150.3	111.0	127.7	144.3	104.9	120.6	136.4
		62	TC	142.2	142.2	147.8	137.4	137.4	147.1	131.0	131.0	144.7	122.8	122.8	140.3
			SHC	107.7	127.8	147.8	106.2	126.7	147.1	103.6	124.2	144.7	99.3	119.8	140.3
		67	TC	152.1	152.1	152.1	148.0	148	148	142.2	142.2	142.2	134.6	134.6	134.6
			SHC	84.8	104.3	123.7	83.8	103.8	123.7	82.0	102.3	122.6	79.4	99.9	120.4
		72	TC	161.3	161.3	161.3	157.8	157.8	157.8	152.5	152.5	152.5	145.4	145.4	145.4
			SHC	62.6	82.2	101.9	61.4	81.4	101.3	59.7	79.7	99.8	57.2	77.3	97.5
		76	TC	–	167.7	167.7	–	164.9	164.9	–	159.9	159.9	–	152.8	152.8
			SHC	–	66.4	91.4	–	65	89.2	–	63.1	86.4	–	60.5	83.1
5400 Cfm	EAT (wb)	58	TC	140.5	140.5	158.8	136.9	136.9	154.7	131.8	131.8	149	125.2	125.2	141.6
			SHC	122.2	140.5	158.8	119	136.9	154.7	114.7	131.8	149	108.9	125.2	141.6
		62	TC	144.3	144.3	155.7	139.6	139.6	155	133.5	133.5	152.4	125.8	125.8	147.8
			SHC	112.2	133.9	155.7	110.9	132.9	155	108.1	130.2	152.4	103.9	125.8	147.8
		67	TC	154.2	154.2	154.2	150.0	150.0	150.0	144.2	144.2	144.2	136.7	136.7	136.7
			SHC	87.6	108.6	129.6	86.8	108.5	130.1	85.2	107.3	129.4	82.8	105.1	127.4
		72	TC	163.1	163.1	163.1	159.7	159.7	159.7	154.3	154.3	154.3	147.1	147.1	147.1
			SHC	63.6	84.6	105.6	62.5	83.9	105.4	60.8	82.5	104.2	58.4	80.2	102
		76	TC	–	169.3	169.3	–	166.5	166.5	–	161.5	161.5	–	154.2	154.2
			SHC	–	67.6	93.7	–	66.4	91.7	–	64.5	89.2	–	61.9	86.1
6000 Cfm	EAT (wb)	58	TC	143.6	143.6	162.3	140.1	140.1	158.3	135.1	135.1	152.7	128.7	128.7	145.5
			SHC	124.9	143.6	162.3	121.8	140.1	158.3	117.5	135.1	152.7	111.9	128.7	145.5
		62	TC	146.1	146.1	162.4	141.7	141.7	161.5	135.6	135.6	159.2	128.8	128.8	151.2
			SHC	116.1	139.3	162.4	114.7	138.1	161.5	112.1	135.6	159.2	106.4	128.8	151.2
		67	TC	155.8	155.8	155.8	151.6	151.6	151.6	145.9	145.9	145.9	138.3	138.3	138.3
			SHC	90.1	112.6	135	89.6	112.8	136	88.3	112.0	135.8	85.9	110.0	134.1
		72	TC	164.5	164.5	164.5	161.2	161.2	161.2	155.8	155.8	155.8	148.5	148.5	148.5
			SHC	64.5	86.7	108.9	63.5	86.3	109.1	61.9	85.1	108.2	59.6	82.9	106.3
		76	TC	–	170.6	170.6	–	167.8	167.8	–	162.8	162.8	–	155.5	155.5
			SHC	–	68.7	95.8	–	67.5	94.1	–	65.7	91.8	–	63.3	88.8

* See Minimum–Maximum Airflow Ratings in Table 7. Do not operate outside these limits.

LEGEND:

– – Do not operate in this region
Cfm – Cubic feet per minute (supply air)
EAT(db) – Entering air temperature (dry bulb)
EAT(wb) – Entering air temperature (wet bulb)
SHC – Sensible heat capacity
TC – Total capacity

RGS150 COOLING CAPACITIES, UNIT WITH HOT GAS RE–HEAT SYSTEM IN SUBCOOLING MODE										
TEMP (F) AIR ENT CONDENSER (Edb)		AIR ENTERING EVAPORATOR – CFM								
		3750/0.02			5000/0.06			6250/0.05		
		Air Entering Evaporator – Ewb (F)								
		72	67	62	72	67	62	72	67	62
75	TC	183.66	166.86	151.43	194.90	177.83	162.05	201.97	184.84	170.53
	SHC	79.39	100.52	121.91	91.70	119.42	147.05	102.94	137.00	166.71
	kW	9.82	9.63	9.46	9.58	9.76	9.96	10.04	9.84	9.67
85	TC	172.71	156.78	142.09	183.32	167.13	152.17	189.98	173.73	160.25
	SHC	69.03	90.92	112.95	80.69	109.17	137.51	91.49	126.33	156.65
	kW	10.82	10.63	10.45	10.57	10.76	10.96	11.04	10.84	10.67
95	TC	161.37	146.24	132.38	171.36	156.04	141.86	177.62	162.22	149.50
	SHC	58.44	81.04	103.77	69.42	98.67	127.71	79.83	115.45	146.15
	kW	11.92	11.73	11.56	11.68	11.86	12.05	12.14	11.93	11.77
105	TC	149.57	135.32	122.21	158.89	144.45	131.10	164.74	150.27	138.35
	SHC	47.57	70.92	94.32	57.85	87.91	117.61	67.79	104.26	135.30
	kW	13.12	12.94	12.77	12.89	13.06	13.24	13.32	13.13	12.97
115	TC	137.22	123.88	111.55	145.85	132.33	119.84	151.27	137.71	126.67
	SHC	36.31	60.47	84.57	45.87	76.77	107.19	55.34	92.66	123.98
	kW	14.41	14.25	14.10	14.20	14.35	14.53	14.59	14.42	14.28

RGS150 COOLING CAPACITIES, UNIT WITH HOT GAS RE–HEAT SYSTEM IN HOT GAS REHEAT MODE										
TEMP (F)AIR ENT CONDENSER(Edb)		AIR ENTERING EVAPORATOR – Ewb (F)								
		75 Dry Bulb 62.5 Wet Bulb (50% Relative)			75 Dry Bulb 64 Wet Bulb (56% Relative)			75 Dry Bulb 65.3 Wet Bulb (60% Relative)		
		Air Entering Evaporator – Cfm								
		3750	5000	6250	3750	5000	6250	3750	5000	6250
80	TC	52.42	45.88	36.99	62.64	58.07	51.07	71.56	68.64	63.23
	SHC	–0.39	–0.54	–0.67	–0.31	–0.46	–0.58	–0.26	–0.40	–0.52
	kW	9.65	9.39	9.07	9.97	9.77	9.50	10.25	10.11	9.89
75	TC	53.45	46.63	36.10	63.77	59.11	51.87	72.76	69.80	64.31
	SHC	0.59	0.44	0.30	0.67	0.52	0.40	0.72	0.58	0.47
	kW	9.09	8.83	8.49	9.39	9.20	8.94	9.67	9.53	9.32
70	TC	54.33	46.91	37.58	64.77	60.01	52.30	73.80	70.80	65.24
	SHC	1.56	1.41	1.29	1.64	1.50	1.38	1.70	1.56	1.45
	kW	8.81	8.53	8.62	9.15	8.94	8.65	9.46	9.31	9.08
60	TC	55.47	49.48	40.48	66.62	62.07	54.88	75.68	72.76	67.28
	SHC	3.50	3.38	3.27	3.59	3.47	3.36	3.65	3.52	3.42
	kW	8.36	8.84	8.98	9.88	9.56	9.10	9.83	9.64	9.31
50	TC	58.33	51.72	42.81	68.72	63.93	55.84	77.74	74.77	69.24
	SHC	5.47	5.35	5.24	5.54	5.43	5.32	5.60	5.49	5.39
	kW	8.98	9.25	9.43	9.33	8.97	8.73	9.55	9.33	9.70
40	TC	60.33	53.69	46.89	70.67	65.93	49.83	79.46	76.62	71.24
	SHC	7.42	7.31	7.22	7.49	7.39	7.23	7.55	7.45	7.37
	kW	9.16	9.88	9.06	9.50	9.05	9.47	10.31	10.00	9.48

LEGEND

Edb – Entering Dry–Bulb
Ewb – Entering Wet–Bulb
kW – Compressor Motor Power Input
Idb – Leaving Dry–Bulb
Iwb – Leaving Wet–Bulb
SHC – Sensible Heat Capacity (1000 Btuh) Gross
TC – Total Capacity (1000 Btuh) Gross

NOTES:

1. Direct interpolation is permissible. Do not extrapolate.
2. The following formulas may be used:

$$t_{ldb} = t_{edb} - \frac{\text{sensible capacity (Btuh)}}{1.10 \times \text{cfm}}$$

t_{lwb} = Wet–bulb temperature corresponding to enthalpy of air leaving evaporator coil (h_{lwb})

$$h_{lwb} = h_{ewb} - \frac{\text{total capacity (Btuh)}}{4.5 \times \text{cfm}}$$

Where: h_{ewb} = Enthalpy of air entering evaporator coil

Table 31 – COOLING CAPACITIES 2–STAGE COOLING 15 TONS

RGS180 (RTPF)				Ambient Temperature											
				85			95			105			115		
				EA (dB)			EA (dB)			EA (dB)			EA (dB)		
				75	80	85	75	80	85	75	80	85	75	80	85
4500 Cfm	EAT (wb)	58	THC	156.6	156.6	175.2	149.4	149.4	169.1	141.6	141.6	160.2	133.3	133.3	150.9
			SHC	134.7	154.9	175.2	129.8	149.4	169.1	123.0	141.6	160.2	115.7	133.3	150.9
		62	THC	166.7	166.7	166.9	158.0	158.0	162.6	147.6	147.6	157.2	136.8	136.8	150.3
			SHC	122.8	144.9	166.9	118.6	140.6	162.6	113.5	135.3	157.2	107.4	128.8	150.3
		67	THC	184.1	184.1	184.1	175.6	175.6	175.6	165.6	165.6	165.6	154.5	154.5	154.5
			SHC	101.6	123.7	145.7	98.1	120.2	142.3	94.0	116.1	138.2	89.4	111.5	133.6
		72	THC	200.3	200.3	200.3	192.0	192.0	192.0	182.9	182.9	182.9	172.2	172.2	172.2
			SHC	78.7	101.1	123.5	75.5	97.9	120.2	72.1	94.4	116.7	68.2	90.5	112.7
		76	THC	-	211.4	211.4	-	203.1	203.1	-	193.8	193.8	-	183.9	183.9
			SHC	-	82.2	107.0	-	79.3	103.8	-	76.0	100.2	-	72.6	96.5
5250 Cfm	EAT (wb)	58	THC	165.2	165.2	186.9	158.2	158.2	179.0	150.0	150.0	169.7	141.3	141.3	160.0
			SHC	143.5	165.2	186.9	137.4	158.2	179.0	130.2	150.0	169.7	122.7	141.3	160.0
		62	THC	172.3	172.3	181.7	163.4	163.4	176.9	153.1	153.1	169.3	143.4	143.4	161.4
			SHC	131.6	156.6	181.7	127.1	152.0	176.9	120.5	144.9	169.3	114.1	137.8	161.4
		67	THC	189.5	189.5	189.5	180.9	180.9	180.9	170.7	170.7	170.7	159.1	159.1	159.1
			SHC	107.2	132.4	157.5	103.8	129.0	154.1	99.9	125.1	150.4	95.3	120.6	145.8
		72	THC	205.0	205.0	205.0	196.5	196.5	196.5	187.1	187.1	187.1	176.4	176.4	176.4
			SHC	80.9	106.1	131.3	77.7	102.9	128.1	74.4	99.5	124.7	70.6	95.8	121.0
		76	THC	-	215.4	215.4	-	206.8	206.8	-	197.1	197.1	-	186.9	186.9
			SHC	-	85.0	113.0	-	82.0	109.8	-	78.8	106.4	-	75.4	102.8
6000 Cfm	EAT (wb)	58	THC	172.7	172.7	195.4	165.5	165.5	187.3	157.1	157.1	177.8	148.1	148.1	167.7
			SHC	150.0	172.7	195.4	143.8	165.5	187.3	136.4	157.1	177.8	128.6	148.1	167.7
		62	THC	176.6	176.6	195.7	168.1	168.1	187.6	158.9	158.9	180.2	148.9	148.9	172.1
			SHC	139.6	167.7	195.7	133.2	160.4	187.6	127.1	153.7	180.2	120.7	146.4	172.1
		67	THC	193.6	193.6	193.6	184.8	184.8	184.8	174.7	174.7	174.7	162.7	162.7	162.7
			SHC	112.3	140.3	168.3	108.9	137.0	165.2	105.2	133.5	161.7	100.7	129.0	157.3
		72	THC	208.4	208.4	208.4	199.6	199.6	199.6	190.2	190.2	190.2	179.5	179.5	179.5
			SHC	82.7	110.5	138.3	79.6	107.3	135.1	76.2	104.0	131.8	72.6	100.6	128.5
		76	THC	-	218.2	218.2	-	209.5	209.5	-	199.5	199.5	-	189.0	189.0
			SHC	-	87.5	118.6	-	84.5	115.2	-	81.1	111.3	-	77.5	107.3
6750 Cfm	EAT (wb)	58	THC	178.8	178.8	202.4	171.6	171.6	194.2	163.1	163.1	184.6	153.8	153.8	174.1
			SHC	155.3	178.8	202.4	149.0	171.6	194.2	141.6	163.1	184.6	133.5	153.8	174.1
		62	THC	181.0	181.0	203.6	173.0	173.0	197.5	163.8	163.8	190.1	153.9	153.9	181.1
			SHC	144.1	173.9	203.6	139.1	168.3	197.5	133.3	161.7	190.1	126.7	153.9	181.1
		67	THC	196.8	196.8	196.8	187.9	187.9	187.9	177.7	177.7	177.7	165.5	165.5	167.9
			SHC	117.0	147.7	178.4	113.7	144.5	175.4	110.1	141.1	172.2	105.6	136.8	167.9
		72	THC	211.0	211.0	211.0	202.2	202.2	202.2	192.5	192.5	192.5	181.8	181.8	181.8
			SHC	84.3	114.5	144.7	81.2	111.5	141.7	77.9	108.1	138.4	74.4	104.9	135.4
		76	THC	-	220.2	220.2	-	211.5	211.5	-	201.3	201.3	-	190.6	190.6
			SHC	-	89.5	122.8	-	86.4	119.4	-	83.0	115.4	-	79.4	111.5
7500 Cfm	EAT (wb)	58	THC	183.9	183.9	208.2	176.6	176.6	199.8	168.2	168.2	190.3	158.6	158.6	179.5
			SHC	159.7	183.9	208.2	153.3	176.6	199.8	146.0	168.2	190.3	137.7	158.6	179.5
		62	THC	185.1	185.1	212.5	177.1	177.1	206.2	168.3	168.3	197.9	158.7	158.7	186.7
			SHC	149.5	181.0	212.5	144.5	175.4	206.2	138.7	168.3	197.9	130.8	158.7	186.7
		67	THC	199.3	199.3	199.3	190.3	190.3	190.3	180.0	180.0	181.7	167.8	167.8	177.8
			SHC	121.3	154.6	187.9	118.1	151.6	185.1	114.4	148.1	181.7	110.1	144.0	177.8
		72	THC	213.0	213.0	213.0	204.1	204.1	204.1	194.2	194.2	194.2	183.5	183.5	183.5
			SHC	85.8	118.2	150.5	82.7	115.2	147.7	79.4	111.9	144.4	76.0	108.8	141.6
		76	THC	-	221.9	221.9	-	213.0	213.0	-	202.7	202.7	-	191.8	191.8
			SHC	-	91.2	126.5	-	88.2	123.1	-	84.7	119.2	-	81.2	115.3

* See Minimum–Maximum Airflow Ratings in Table 7. Do not operate outside these limits.

LEGEND:

– – Do not operate in this region
Cfm – Cubic feet per minute (supply air)
EAT(db) – Entering air temperature (dry bulb)
EAT(wb) – Entering air temperature (wet bulb)
SHC – Sensible heat capacity
TC – Total capacity

RGS180 COOLING CAPACITIES, UNIT WITH HOT GAS RE–HEAT IN SUBCOOLING MODE										
TEMP (F) AIR ENT CONDENSER (Edb)		AIR ENTERING EVAPORATOR – CFM								
		4500/0.02			6000/0.06			7500/0.05		
		Air Entering Evaporator – Ewb (F)								
		72	67	62	72	67	62	72	67	62
75	TC	204.4	186.3	168.2	218.4	199.6	180.9	229.6	210.4	191.2
	SHC	98.9	118.1	137.2	114.8	133.7	152.6	127.6	146.2	164.9
	kW	11.57	11.22	10.77	11.78	11.45	11.00	12.06	11.64	11.35
85	TC	189.2	171.7	154.1	203.0	184.8	166.7	214.1	195.5	176.9
	SHC	79.5	103.4	127.3	96.5	120.2	144.0	110.2	133.7	157.3
	kW	12.59	12.24	11.81	12.81	12.50	12.03	13.05	12.66	12.47
95	TC	174.0	157.0	140.0	187.6	170.1	152.5	198.6	180.6	162.7
	SHC	60.0	88.7	117.5	78.2	106.8	135.3	92.9	121.3	149.7
	kW	13.68	13.35	12.86	13.91	13.57	13.05	14.15	13.75	13.47
105	TC	158.8	142.3	125.8	172.2	155.3	138.3	183.1	165.7	148.4
	SHC	40.5	74.1	107.7	59.9	93.3	126.7	75.5	108.8	142.0
	kW	14.67	14.41	13.88	14.90	14.55	14.10	15.15	14.73	14.53
115	TC	143.6	127.6	111.7	156.8	140.5	124.1	167.6	150.9	134.2
	SHC	21.0	59.4	97.8	41.6	79.9	118.1	58.1	96.3	134.2
	kW	15.77	15.38	14.88	15.88	15.65	15.10	16.12	15.84	15.54

RGS180 COOLING CAPACITIES, UNIT WITH HOT GAS RE–HEAT IN HOT GAS REHEAT MODE										
TEMP (F) AIR ENT CONDENSER Edb)		AIR ENTERING EVAPORATOR – Ewb (F)								
		75 Dry Bulb 62.5 Wet Bulb (50% Relative)			75 Dry Bulb 64 Wet Bulb (56% Relative)			75 Dry Bulb 65.3 Wet Bulb (60% Relative)		
		Air Entering Evaporator – Cfm								
		4500	6000	7500	4500	6000	7500	4500	6000	7500
80	TC	83.75	84.85	88.95	86.65	91.90	92.90	87.90	91.75	96.30
	SHC	37.50	42.80	55.10	30.90	40.40	44.50	24.80	29.30	34.10
	kW	10.50	11.49	11.60	10.56	10.65	11.70	11.60	11.72	11.77
75	TC	85.00	86.00	90.50	88.05	93.60	94.65	89.20	93.45	97.85
	SHC	40.00	45.00	57.30	33.20	42.30	46.90	26.90	31.50	36.30
	kW	10.16	11.15	11.25	10.21	10.31	11.33	11.26	11.35	11.42
70	TC	86.15	87.35	91.50	89.20	94.30	96.10	90.40	94.10	98.95
	SHC	42.10	47.50	59.80	35.50	45.30	49.50	29.50	33.90	38.70
	kW	9.84	10.83	10.94	10.02	10.13	11.03	10.95	11.05	11.12
60	TC	88.90	90.10	94.25	92.00	97.10	98.20	93.20	96.90	101.75
	SHC	46.80	52.30	64.60	40.20	50.10	54.10	34.10	38.60	43.40
	kW	9.37	10.36	10.44	9.42	9.52	10.55	10.45	10.57	10.64
50	TC	91.70	92.80	97.00	94.80	99.90	101.00	96.10	99.70	104.20
	SHC	51.50	57.10	69.40	44.80	54.80	58.90	38.70	43.20	49.00
	kW	9.12	10.09	10.16	9.17	9.28	10.26	10.17	10.26	10.32
40	TC	94.45	95.60	99.80	97.45	102.55	103.70	98.65	102.35	107.00
	SHC	56.30	61.40	73.70	49.70	59.20	63.30	43.60	48.10	52.90
	kW	9.05	10.02	10.10	9.10	9.21	10.18	10.11	10.20	10.26

LEGEND

Edb – Entering Dry–Bulb
Ewb – Entering Wet–Bulb
kW – Compressor Motor Power Input
ldb – Leaving Dry–Bulb
lwb – Leaving Wet–Bulb
SHC – Sensible Heat Capacity (1000 Btuh) Gross
TC – Total Capacity (1000 Btuh) Gross

NOTES:

1. Direct interpolation is permissible. Do not extrapolate.
2. The following formulas may be used:

$$t_{ldb} = t_{edb} - \frac{\text{sensible capacity (Btuh)}}{1.10 \times \text{cfm}}$$

t_{lwb} = Wet–bulb temperature corresponding to enthalpy of air leaving evaporator coil (h_{lwb})

$$h_{lwb} = h_{ewb} - \frac{\text{total capacity (Btuh)}}{4.5 \times \text{cfm}}$$

Where: h_{ewb} = Enthalpy of air entering evaporator coil

Table 33 – STATIC PRESSURE ADDERS (IN. WG) (FACTORY OPTIONS AND/OR ACCESSORIES)

Hot Gas Re–Heat

6 Tons									
CFM	1000	1250	1500	1750	2000	2250	2500	2750	3000
6 Tons	–	–	–	0.112	0.125	0.161	0.19	0.22	0.25

7.5–12.5 Tons																
CFM	2250	2500	2750	3000	3250	3500	3750	4000	4250	4500	4750	5000	5250	5500	5750	6000
7.5 Tons	0.12	0.14	0.16	0.19	0.21	0.23	0.26	–	–	–	–	–	–	–	–	–
8.5 Tons	–	0.11	0.12	0.13	0.15	0.17	0.18	0.20	0.22	–	–	–	–	–	–	–
10 Tons	–	–	–	0.13	0.15	0.17	0.18	0.20	0.22	0.24	0.26	0.28	–	–	–	–
12.5 Tons	–	–	–	–	–	0.17	0.18	0.20	0.22	0.24	0.26	0.28	0.31	0.33	0.36	0.39

15 TONS														
CFM	4000	4250	4500	4750	5000	5250	5500	5750	6000	6250	6500	6750	7000	7250
15 Tons	0.06	0.07	0.07	0.08	0.08	0.09	0.10	0.10	0.11	0.12	0.12	0.13	0.14	0.15

ECONOMIZER, BAROMETRIC RELIEF AND PE PERFORMANCE

Vertical Application

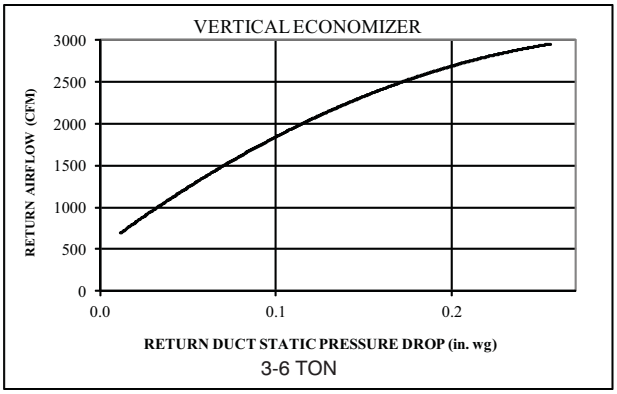

C11238

Fig. 16 – Return Air Pressure Drop

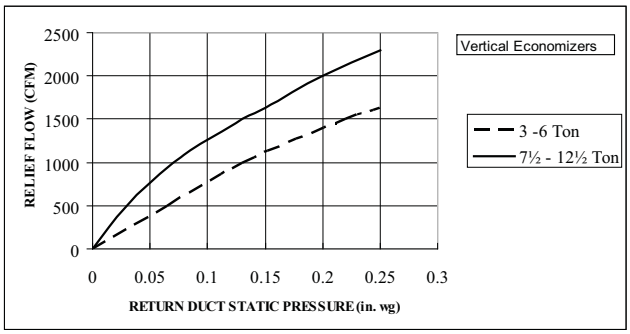

C08073

Fig. 19 – Barometric Relief Flow Capacity

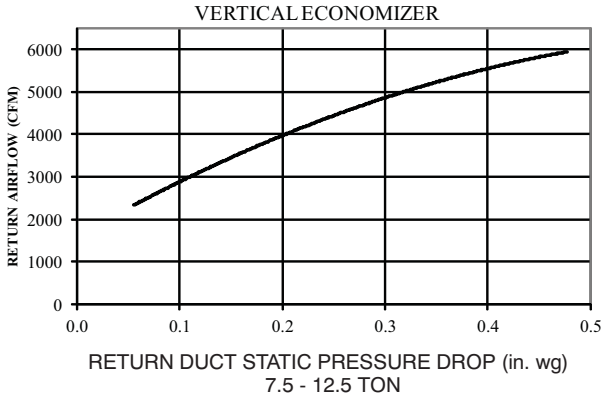

C11240

Fig. 17 – Return Air Pressure Drop

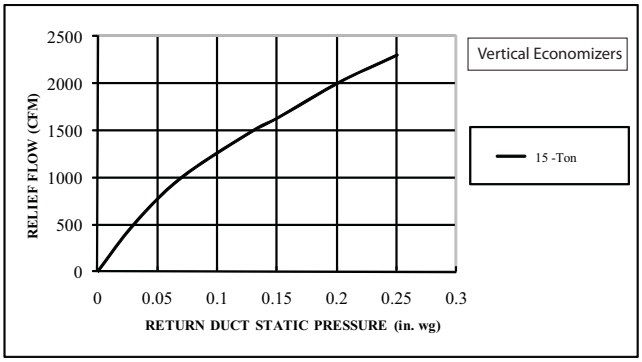

C101122

Fig. 20 – Barometric Relief Flow–Vertical 15 Ton

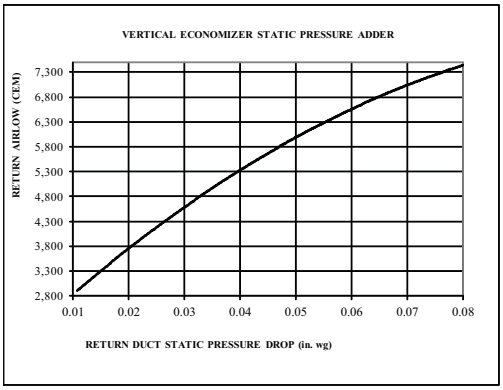

C11257

Fig. 18 – Return Air Pressure Drop–Vertical 15 Tons

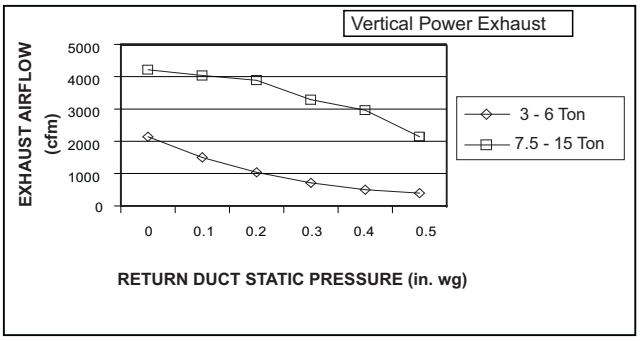

C11248

Fig. 21 – Vertical Power Exhaust Performance

All above data for both standard and ultra low leak models, where available.

Horizontal Application

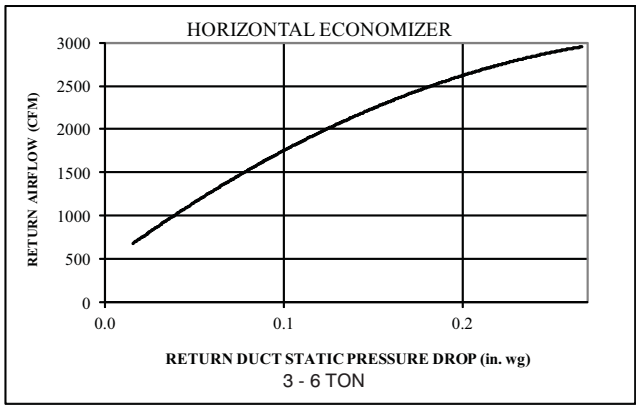

C11239

Fig. 22 – Return Air Pressure Drop

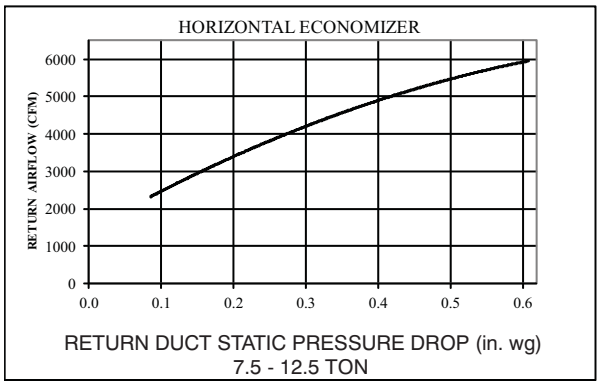

C11241

Fig. 23 – Return Air Pressure Drop

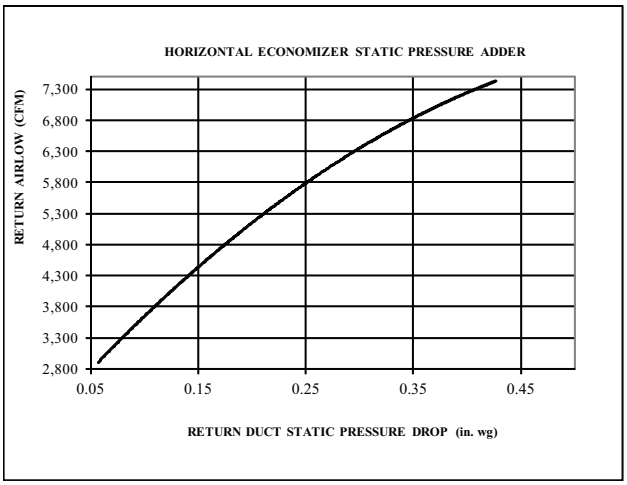

C11258

Fig. 24 – Return Air Pressure Drop–Horizontal 15 Ton

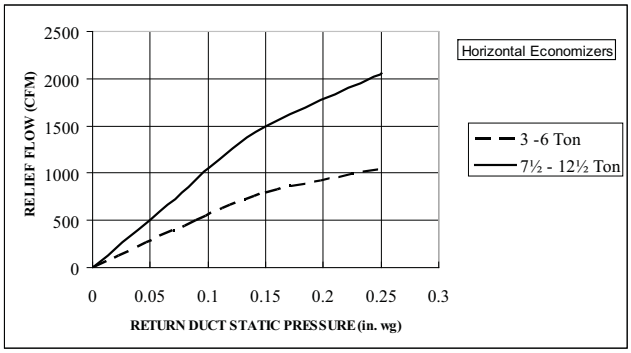

C08070

Fig. 25 – Barometric Relief Flow Capacity

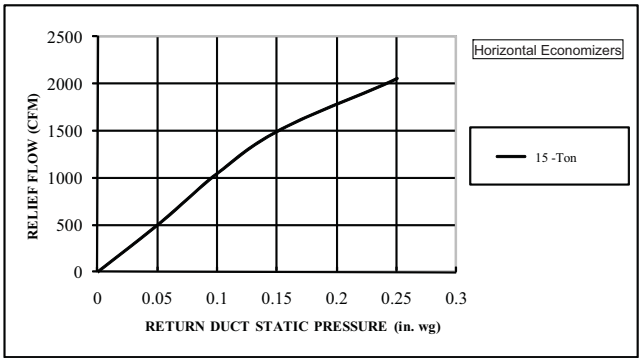

C101120

Fig. 26 – Barometric Relief Flow–Horizontal 15 Ton

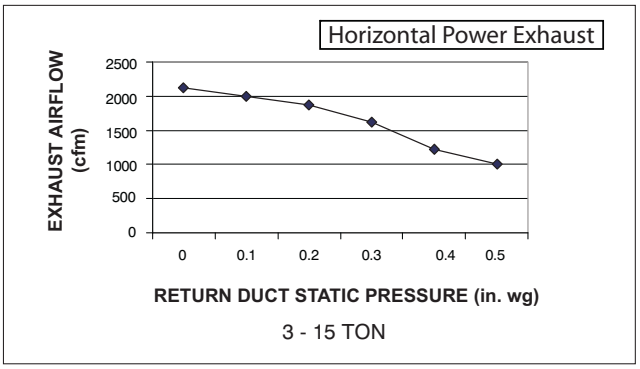

C08012

Fig. 27 – Horizontal Power Exhaust Performance

GENERAL FAN PERFORMANCE NOTES

4. Interpolation is permissible. Do not extrapolate.
5. External static pressure is the static pressure difference between the return duct and the supply duct plus the static pressure caused by any FIOPs or accessories.
6. Tabular data accounts for pressure loss due to clean filters, unit casing, and wet coils. Factory options and accessories may add static pressure losses. Selection software is available, through your salesperson, to help you select the best motor/drive combination for your application.
7. The Fan Performance tables offer motor/drive recommendations. In cases when two motor/drive combinations would work, ICP recommended the lower horsepower option.
8. For information on the electrical properties of ICP motors, please see the Electrical information section of this book.
9. For more information on the performance limits of ICP motors, see the application data section of this book.
10. The EPACT (Energy Policy Act of 1992) regulates energy requirements for specific types of indoor fan motors. Motors regulated by EPACT include any general purpose, T−frame (three−digit, 143 and larger), single−speed, foot mounted, polyphase, squirrel cage induction motors of NEMA (National Electrical Manufacturers Association) design A and B, manufactured for use in the United States. Ranging from 1 to 200 Hp, these continuous−duty motors operate on 230 and 460 volt, 60 Hz power. If a motor does not fit into these specifications, the motor does not have to be replaced by an EPACT compliant energy efficient motor. Variable speed motors are exempt from EPACT compliance requirements. Therefore, the indoor fan motors for ICP RGS036−180 units are exempt from these requirements.

FAN PERFORMANCE (DIRECT DRIVE)

Table 34 – 36 Vertical Unit – Direct Drive

Speed (Torque) tap	CFM	ESP	BHP
1	900	0.79	0.36
	975	0.66	0.35
	1050	0.54	0.33
	1125	0.42	0.31
	1200	0.31	0.30
	1275	0.20	0.28
	1350	0.10	0.27
	1425	–	–
	1500	–	–
2	900	1.06	0.46
	975	0.96	0.46
	1050	0.84	0.46
	1125	0.72	0.45
	1200	0.58	0.43
	1275	0.45	0.41
	1350	0.32	0.39
	1425	0.20	0.37
	1500	0.09	0.35
3	900	1.12	0.49
	975	1.06	0.52
	1050	1.01	0.54
	1125	0.95	0.56
	1200	0.89	0.59
	1275	0.83	0.61
	1350	0.77	0.63
	1425	0.70	0.65
	1500	0.62	0.66
4	900	1.11	0.50
	975	1.06	0.52
	1050	1.00	0.54
	1125	0.95	0.56
	1200	0.90	0.58
	1275	0.84	0.61
	1350	0.79	0.63
	1425	0.73	0.66
	1500	0.67	0.68
5	900	1.12	0.50
	975	1.07	0.52
	1050	1.01	0.54
	1125	0.96	0.57
	1200	0.90	0.59
	1275	0.85	0.62
	1350	0.79	0.64
	1425	0.74	0.67
	1500	0.68	0.69

Table 35 – 36 Horizontal Unit – Direct Drive

Speed (Torque) tap	CFM	ESP	BHP
1	900	0.87	0.36
	975	0.74	0.35
	1050	0.63	0.33
	1125	0.52	0.31
	1200	0.42	0.30
	1275	0.32	0.28
	1350	0.23	0.27
	1425	0.14	0.26
	1500	0.03	0.24
2	900	1.13	0.46
	975	1.04	0.46
	1050	0.93	0.46
	1125	0.82	0.45
	1200	0.69	0.43
	1275	0.57	0.41
	1350	0.45	0.39
	1425	0.34	0.37
	1500	0.25	0.35
3	900	1.19	0.49
	975	1.14	0.52
	1050	1.10	0.54
	1125	1.05	0.56
	1200	1.00	0.59
	1275	0.95	0.61
	1350	0.90	0.63
	1425	0.84	0.65
	1500	0.78	0.66
4	900	1.19	0.50
	975	1.14	0.52
	1050	1.09	0.54
	1125	1.05	0.56
	1200	1.01	0.58
	1275	0.96	0.61
	1350	0.92	0.63
	1425	0.88	0.66
	1500	0.83	0.68
5	900	1.20	0.50
	975	1.15	0.52
	1050	1.10	0.54
	1125	1.06	0.57
	1200	1.02	0.59
	1275	0.97	0.62
	1350	0.93	0.64
	1425	0.88	0.67
	1500	0.84	0.69

FAN PERFORMANCE (DIRECT DRIVE) (cont.)

Table 36 – 48 Vertical Unit – Direct Drive

Speed (Torque) tap	CFM	ESP	BHP
1	1200	0.29	0.30
	1300	0.14	0.28
	1400	–	–
	1500	–	–
	1600	–	–
	1700	–	–
	1800	–	–
	1900	–	–
	2000	–	
2	1200	0.56	0.43
	1300	0.38	0.40
	1400	0.21	0.37
	1500	0.06	0.35
	1600	–	–
	1700	–	–
	1800	–	–
	1900	–	–
	2000	–	–
3	1200	0.87	0.59
	1300	0.79	0.62
	1400	0.69	0.64
	1500	0.59	0.66
	1600	0.47	0.67
	1700	0.33	0.67
	1800	0.16	0.64
	1900	–	–
	2000	–	–
4	1200	0.87	0.58
	1300	0.80	0.62
	1400	0.72	0.65
	1500	0.64	0.68
	1600	0.55	0.72
	1700	0.44	0.74
	1800	–	–
	1900	–	–
	2000	–	–
5	1200	0.88	0.59
	1300	0.81	0.62
	1400	0.73	0.66
	1500	0.65	0.69
	1600	0.56	0.73
	1700	–	–
	1800	–	–
	1900	–	–
	2000	–	–

Table 37 – 48 Horizontal Unit – Direct Drive

Speed (Torque) tap	CFM	ESP	BHP
1	1200	0.40	0.30
	1300	0.27	0.28
	1400	0.14	0.26
	1500	–	–
	1600	–	–
	1700	–	–
	1800	–	–
	1900	–	–
	2000	–	–
2	1200	0.67	0.43
	1300	0.51	0.40
	1400	0.35	0.37
	1500	0.21	0.35
	1600	0.12	0.34
	1700	0.10	0.36
	1800	0.17	0.41
	1900	0.37	0.52
	2000	0.71	0.69
3	1200	0.98	0.59
	1300	0.91	0.62
	1400	0.83	0.64
	1500	0.75	0.66
	1600	0.64	0.67
	1700	0.52	0.67
	1800	0.38	0.64
	1900	0.20	0.59
	2000	–	–
4	1200	0.98	0.58
	1300	0.92	0.62
	1400	0.86	0.65
	1500	0.80	0.68
	1600	0.72	0.72
	1700	0.64	0.74
	1800	–	–
	1900	–	–
	2000	–	–
5	1200	0.99	0.59
	1300	0.93	0.62
	1400	0.87	0.66
	1500	0.81	0.69
	1600	0.74	0.73
	1700	–	–
	1800	–	–
	1900	–	–
	2000	–	–

Specifications subject to change without notice.

FAN PERFORMANCE (DIRECT DRIVE) (cont.)

Table 38 – 60 Vertical Unit – Direct Drive

Speed (Torque) tap	CFM	ESP	BHP
1	1500	0.60	0.74
	1625	0.38	0.71
	1750	0.17	0.68
	1875	–	–
	2000	–	–
	2125	–	–
	2250	–	–
	2375	–	–
	2500	–	–
2	1500	0.74	0.82
	1625	0.54	0.80
	1750	0.31	0.77
	1875	0.09	0.74
	2000	–	–
	2125	–	–
	2250	–	–
	2375	–	–
	2500	–	–
3	1500	0.77	0.84
	1625	0.58	0.83
	1750	0.36	0.81
	1875	0.13	0.77
	2000	–	–
	2125	–	–
	2250	–	–
	2375	–	–
	2500	–	–
4	1500	0.88	0.92
	1625	0.74	0.95
	1750	0.58	0.98
	1875	0.40	0.99
	2000	0.19	0.97
	2125	–	–
	2250	–	–
	2375	–	–
	2500	–	–
5	1500	0.91	0.94
	1625	0.78	0.98
	1750	–	–
	1875	–	–
	2000	–	–
	2125	–	–
	2250	–	–
	2375	–	–
	2500	–	–

Table 39 – 60 Horizontal Unit – Direct Drive

Speed (Torque) tap	CFM	ESP	BHP
1	1500	0.76	0.74
	1625	0.56	0.71
	1750	0.38	0.68
	1875	0.23	0.66
	2000	0.16	0.69
	2125	0.21	0.77
	2250	0.41	0.94
	2375	–	–
	2500	–	–
2	1500	0.90	0.82
	1625	0.72	0.80
	1750	0.52	0.77
	1875	0.32	0.74
	2000	0.13	0.70
	2125	–	–
	2250	–	–
	2375	–	–
	2500	–	–
3	1500	0.93	0.84
	1625	0.76	0.83
	1750	0.57	0.81
	1875	0.36	0.77
	2000	0.15	0.72
	2125	–	–
	2250	–	–
	2375	–	–
	2500	–	–
4	1500	1.03	0.92
	1625	0.92	0.95
	1750	0.79	0.98
	1875	0.63	0.99
	2000	0.44	0.97
	2125	0.22	0.92
	2250	–	–
	2375	–	–
	2500	–	–
5	1500	1.06	0.94
	1625	0.96	0.98
	1750	–	–
	1875	–	–
	2000	–	–
	2125	–	–
	2250	–	–
	2375	–	–
	2500	–	–

FAN PERFORMANCE

Table 40 – RGS036 — 1 PHASE — 3 TON VERTICAL SUPPLY

CFM	AVAILABLE EXTERNAL STATIC PRESSURE (in. wg)																			
	0.2		0.4		0.6		0.8		1.0		1.2		1.4		1.6		1.8		2.0	
	RPM	BHP	RPM	BHP	RPM	BHP	RPM	BHP	RPM	BHP	RPM	BHP	RPM	BHP	RPM	BHP	RPM	BHP	RPM	BHP
900	567	0.15	688	0.22	786	0.30	871	0.37	947	0.44	1016	0.51	1080	0.57	1139	0.64	1195	0.71	1249	0.77
975	591	0.17	710	0.26	807	0.34	891	0.42	966	0.49	1034	0.57	1098	0.64	1157	0.72	1213	0.79	1266	0.86
1050	615	0.20	732	0.29	828	0.38	911	0.47	985	0.55	1053	0.63	1116	0.71	1176	0.79	1231	0.87	1284	0.95
1125	641	0.23	755	0.33	849	0.42	931	0.52	1005	0.61	1073	0.70	1135	0.79	1194	0.87	1250	0.96	1302	1.04
1200	666	0.26	778	0.37	871	0.47	952	0.57	1025	0.67	1093	0.77	1155	0.87	1213	0.96	1268	1.05	1321	1.14
1275	693	0.29	802	0.41	893	0.53	974	0.63	1046	0.74	1113	0.85	1174	0.95	1232	1.05	1287	1.15	–	–
1350	719	0.33	826	0.46	916	0.58	995	0.70	1067	0.81	1133	0.92	1194	1.03	1252	1.14	–	–	–	–
1425	746	0.38	850	0.51	939	0.64	1017	0.76	1088	0.89	1154	1.01	1215	1.12	–	–	–	–	–	–
1500	773	0.42	875	0.57	963	0.70	1040	0.84	1110	0.96	1175	1.09	–	–	–	–	–	–	–	–

STD Static – 560–854 RPM, 1.2 Max BHP

MED Static – 770–1175 RPM, 1.2 Max BHP

Bold Face = Field Supplied Drive Required.

For more information, see General Fan Performance Notes on page 61.

NOTE: Production of single phase units has been discontinued per DOE regulations. Single phase RAS models are only available until current inventories are exhausted.

Table 41 – RGS036 — 1 PHASE — 3 TON HORIZONTAL SUPPLY

CFM	AVAILABLE EXTERNAL STATIC PRESSURE (in. wg)																			
	0.2		0.4		0.6		0.8		1.0		1.2		1.4		1.6		1.8		2.0	
	RPM	BHP	RPM	BHP	RPM	BHP	RPM	BHP	RPM	BHP	RPM	BHP	RPM	BHP	RPM	BHP	RPM	BHP	RPM	BHP
900	553	0.14	681	0.22	782	0.32	870	0.42	948	0.53	1019	0.64	1084	0.76	1146	0.89	1203	1.02	1258	1.16
975	575	0.16	700	0.25	801	0.35	888	0.46	965	0.57	1036	0.69	1101	0.81	1162	0.94	1219	1.08	–	–
1050	597	0.18	720	0.28	820	0.38	906	0.49	983	0.61	1053	0.74	1118	0.86	1179	1.00	1236	1.14	–	–
1125	620	0.21	741	0.31	839	0.42	925	0.54	1001	0.66	1071	0.79	1135	0.92	1196	1.06	1253	1.20	–	–
1200	643	0.23	762	0.34	859	0.46	944	0.58	1020	0.71	1089	0.84	1153	0.98	1213	1.12	–	–	–	–
1275	667	0.27	783	0.38	879	0.50	963	0.63	1038	0.76	1107	0.90	1171	1.04	1231	1.19	–	–	–	–
1350	691	0.30	805	0.42	900	0.55	983	0.68	1057	0.82	1126	0.96	1189	1.11	–	–	–	–	–	–
1425	715	0.34	827	0.47	920	0.60	1002	0.74	1076	0.88	1144	1.03	1208	1.18	–	–	–	–	–	–
1500	740	0.38	849	0.52	941	0.66	1023	0.80	1096	0.95	1163	1.10	–	–	–	–	–	–	–	–

STD Static – 560–854 RPM, 1.2 Max BHP

MED Static – 770–1175 RPM, 1.2 Max BHP

Bold Face = Field Supplied Drive Required.

For more information, see General Fan Performance Notes on page 61.

NOTE: Production of single phase units has been discontinued per DOE regulations. Single phase RAS models are only available until current inventories are exhausted.

Specifications subject to change without notice.

FAN PERFORMANCE (cont.)

Table 42 – RGS036 — 3 PHASE — 3 TON VERTICAL SUPPLY

CFM	AVAILABLE EXTERNAL STATIC PRESSURE (in. wg)																			
	0.2		0.4		0.6		0.8		1.0		1.2		1.4		1.6		1.8		2.0	
	RPM	BHP	RPM	BHP	RPM	BHP	RPM	BHP	RPM	BHP	RPM	BHP	RPM	BHP	RPM	BHP	RPM	BHP	RPM	BHP
	Standard Static Option						Medium Static Option										High Static Option			
900	567	0.15	688	0.22	786	0.30	871	0.37	947	0.44	1016	0.51	1080	0.57	1139	0.64	1195	0.71	1249	0.77
975	591	0.17	710	0.26	807	0.34	891	0.42	966	0.49	1034	0.57	1098	0.64	1157	0.72	1213	0.79	1266	0.86
1050	615	0.20	732	0.29	828	0.38	911	0.47	985	0.55	1053	0.63	1116	0.71	1176	0.79	1231	0.87	1284	0.95
1125	641	0.23	755	0.33	849	0.42	931	0.52	1005	0.61	1073	0.70	1135	0.79	1194	0.87	1250	0.96	1302	1.04
1200	666	0.26	778	0.37	871	0.47	952	0.57	1025	0.67	1093	0.77	1155	0.87	1213	0.96	1268	1.05	1321	1.14
1275	693	0.29	802	0.41	893	0.53	974	0.63	1046	0.74	1113	0.85	1174	0.95	1232	1.05	1287	1.15	1339	1.25
1350	719	0.33	826	0.46	916	0.58	995	0.70	1067	0.81	1133	0.92	1194	1.03	1252	1.14	1307	1.25	1358	1.35
1425	746	0.38	850	0.51	939	0.64	1017	0.76	1088	0.89	1154	1.01	1215	1.12	1272	1.24	1326	1.35	1378	1.46
1500	773	0.42	875	0.57	963	0.70	1040	0.84	1110	0.96	1175	1.09	1235	1.22	1292	1.34	1346	1.46	1397	1.58

STD Static – 560–854 RPM, 1.7 Max BHP | MED Static – 770–1175 RPM, 1.7 Max BHP | HIGH Static – 1035–1466 RPM, 2.4 Max BHP

For more information, see General Fan Performance Notes on page 61.

Table 43 – RGS036 — 3 PHASE — 3 TON HORIZONTAL SUPPLY

CFM	AVAILABLE EXTERNAL STATIC PRESSURE (in. wg)																			
	0.2		0.4		0.6		0.8		1.0		1.2		1.4		1.6		1.8		2.0	
	RPM	BHP	RPM	BHP	RPM	BHP	RPM	BHP	RPM	BHP	RPM	BHP	RPM	BHP	RPM	BHP	RPM	BHP	RPM	BHP
900	553	0.14	681	0.22	782	0.32	870	0.42	948	0.53	1019	0.64	1084	0.76	1146	0.89	1203	1.02	1258	1.16
975	575	0.16	700	0.25	801	0.35	888	0.46	965	0.57	1036	0.69	1101	0.81	1162	0.94	1219	1.08	1274	1.22
1050	597	0.18	720	0.28	820	0.38	906	0.49	983	0.61	1053	0.74	1118	0.86	1179	1.00	1236	1.14	1290	1.28
1125	620	0.21	741	0.31	839	0.42	925	0.54	1001	0.66	1071	0.79	1135	0.92	1196	1.06	1253	1.20	1307	1.35
1200	643	0.23	762	0.34	859	0.46	944	0.58	1020	0.71	1089	0.84	1153	0.98	1213	1.12	1270	1.27	1324	1.42
1275	667	0.27	783	0.38	879	0.50	963	0.63	1038	0.76	1107	0.90	1171	1.04	1231	1.19	1287	1.34	1341	1.50
1350	691	0.30	805	0.42	900	0.55	983	0.68	1057	0.82	1126	0.96	1189	1.11	1249	1.26	1305	1.42	1358	1.58
1425	715	0.34	827	0.47	920	0.60	1002	0.74	1076	0.88	1144	1.03	1208	1.18	1267	1.34	1323	1.50	1376	1.66
1500	740	0.38	849	0.52	941	0.66	1023	0.80	1096	0.95	1163	1.10	1226	1.25	1285	1.41	1341	1.58	1394	1.75

STD Static – 560–854 RPM, 1.7 Max BHP | MED Static – 770–1175 RPM, 1.7 Max BHP | HIGH Static – 1035–1466 RPM, 2.4 Max BHP

Bold Face = Field Supplied Drive Required.

For more information, see General Fan Performance Notes on page 61.

FAN PERFORMANCE (cont.)

Table 44 – RGS048 — 1 PHASE — 4 TON VERTICAL SUPPLY

CFM	AVAILABLE EXTERNAL STATIC PRESSURE (in. wg)																			
	0.2		0.4		0.6		0.8		1.0		1.2		1.4		1.6		1.8		2.0	
	RPM	BHP	RPM	BHP	RPM	BHP	RPM	BHP	RPM	BHP	RPM	BHP	RPM	BHP	RPM	BHP	RPM	BHP	RPM	BHP
1200	666	0.26	778	0.37	871	0.47	952	0.57	1025	0.67	1093	0.77	1155	0.87	1213	0.96	1268	1.05	1321	1.14
1300	701	0.31	810	0.43	901	0.54	981	0.65	1053	0.76	1119	0.87	1181	0.98	1239	1.08	1294	1.18	–	–
1400	737	0.36	842	0.49	931	0.62	1010	0.74	1081	0.86	1147	0.98	**1208**	**1.09**	–	–	–	–	–	–
1500	773	0.42	875	0.57	963	0.70	1040	0.84	1110	0.96	1175	1.09	–	–	–	–	–	–	–	–
1600	810	0.49	909	0.65	994	0.79	1070	0.94	1140	1.08	–	–	–	–	–	–	–	–	–	–
1700	847	0.57	943	0.73	1027	0.89	1101	1.05	1170	1.20	–	–	–	–	–	–	–	–	–	–
1800	885	0.66	978	0.83	1060	1.00	1133	1.16	–	–	–	–	–	–	–	–	–	–	–	–
1900	923	0.75	1014	0.94	1093	1.11	1165	1.29	–	–	–	–	–	–	–	–	–	–	–	–
2000	962	0.85	1049	1.05	–	–	–	–	–	–	–	–	–	–	–	–	–	–	–	–

STD Static – 560–854 RPM, 1.2 Max BHP

MED Static – 770–1175 RPM, 1.2 Max BHP

Bold Face = Field Supplied Drive Required.

For more information, see General Fan Performance Notes on page 61.

NOTE: Production of single phase units has been discontinued per DOE regulations. Single phase RAS models are only available until current inventories are exhausted.

Table 45 – RGS048 — 1 PHASE — 4 TON HORIZONTAL SUPPLY

CFM	AVAILABLE EXTERNAL STATIC PRESSURE (in. wg)																			
	0.2		0.4		0.6		0.8		1.0		1.2		1.4		1.6		1.8		2.0	
	RPM	BHP	RPM	BHP	RPM	BHP	RPM	BHP	RPM	BHP	RPM	BHP	RPM	BHP	RPM	BHP	RPM	BHP	RPM	BHP
1200	643	0.23	762	0.34	859	0.46	944	0.58	1020	0.71	1089	0.84	1153	0.98	1213	1.12	–	–	–	–
1300	675	0.28	790	0.40	886	0.52	969	0.65	1044	0.78	1113	0.92	1177	1.06	–	–	–	–	–	–
1400	707	0.33	819	0.45	913	0.58	996	0.72	1070	0.86	1138	1.01	1201	1.15	–	–	–	–	–	–
1500	740	0.38	849	0.52	941	0.66	1023	0.80	1096	0.95	1163	1.10	–	–	–	–	–	–	–	–
1600	773	0.45	879	0.59	970	0.73	1050	0.88	1123	1.04	1189	1.20	–	–	–	–	–	–	–	–
1700	807	0.52	910	0.67	999	0.82	1078	0.98	1150	1.14	–	–	–	–	–	–	–	–	–	–
1800	841	0.59	942	0.75	1029	0.91	1106	1.08	–	–	–	–	–	–	–	–	–	–	–	–
1900	875	0.68	974	0.85	1059	1.02	1135	1.19	–	–	–	–	–	–	–	–	–	–	–	–
2000	910	0.77	1006	0.95	1090	1.13	1165	1.31	–	–	–	–	–	–	–	–	–	–	–	–

STD Static – 560–854 RPM, 1.2 Max BHP

MED Static – 770–1175 RPM, 1.2 Max BHP

Bold Face = Field Supplied Drive Required.

For more information, see General Fan Performance Notes on page 61.

NOTE: Production of single phase units has been discontinued per DOE regulations. Single phase RAS models are only available until current inventories are exhausted.

Specifications subject to change without notice.

FAN PERFORMANCE (cont.)

Table 46 – RGS048 — 3 PHASE — 4 TON VERTICAL SUPPLY

CFM	AVAILABLE EXTERNAL STATIC PRESSURE (in. wg)																			
	0.2		0.4		0.6		0.8		1.0		1.2		1.4		1.6		1.8		2.0	
	RPM	BHP	RPM	BHP	RPM	BHP	RPM	BHP	RPM	BHP	RPM	BHP	RPM	BHP	RPM	BHP	RPM	BHP	RPM	BHP
1200	666	0.26	778	0.37	871	0.47	952	0.57	1025	0.67	1093	0.77	1155	0.87	1213	0.96	1268	1.05	1321	1.14
1300	701	0.31	810	0.43	901	0.54	981	0.65	1053	0.76	1119	0.87	1181	0.98	1239	1.08	1294	1.18	1346	1.28
1400	737	0.36	842	0.49	931	0.62	1010	0.74	1081	0.86	1147	0.98	1208	1.09	1265	1.21	1320	1.32	1371	1.43
1500	773	0.42	875	0.57	963	0.70	1040	0.84	1110	0.96	1175	1.09	1235	1.22	1292	1.34	1346	1.46	1397	1.58
1600	810	0.49	909	0.65	994	0.79	1070	0.94	1140	1.08	1204	1.21	1263	1.35	1320	1.48	1373	1.61	1424	1.74
1700	847	0.57	943	0.73	1027	0.89	1101	1.05	1170	1.20	1233	1.34	1292	1.49	1348	1.63	1401	1.77	1451	1.91
1800	885	0.66	978	0.83	1060	1.00	1133	1.16	1200	1.32	1262	1.48	1321	1.64	1376	1.79	1428	1.94	**1479**	**2.09**
1900	923	0.75	1014	0.94	1093	1.11	1165	1.29	1231	1.46	1293	1.63	1350	1.79	1405	1.96	1457	2.12	1506	2.28
2000	962	0.85	1049	1.05	1127	1.24	1198	1.42	1263	1.61	1323	1.79	1380	1.96	1434	2.13	1486	2.31	–	–

STD Static – 560–854 RPM, 1.7 Max BHP | MED Static – 770–1175 RPM, 1.7 Max BHP | HIGH Static – 1035–1466 RPM, 2.4 Max BHP

Bold Face = Field Supplied Drive Required.

For more information, see General Fan Performance Notes on page 61.

Table 47 – RGS048 — 3 PHASE — 4 TON HORIZONTAL SUPPLY

CFM	AVAILABLE EXTERNAL STATIC PRESSURE (in. wg)																			
	0.2		0.4		0.6		0.8		1.0		1.2		1.4		1.6		1.8		2.0	
	RPM	BHP	RPM	BHP	RPM	BHP	RPM	BHP	RPM	BHP	RPM	BHP	RPM	BHP	RPM	BHP	RPM	BHP	RPM	BHP
1200	643	0.23	762	0.34	859	0.46	944	0.58	1020	0.71	1089	0.84	1153	0.98	1213	1.12	1270	1.27	1324	1.42
1300	675	0.28	790	0.40	886	0.52	969	0.65	1044	0.78	1113	0.92	1177	1.06	1237	1.21	1293	1.36	1347	1.52
1400	707	0.33	819	0.45	913	0.58	996	0.72	1070	0.86	1138	1.01	1201	1.15	1261	1.31	1317	1.47	1370	1.63
1500	740	0.38	849	0.52	941	0.66	1023	0.80	1096	0.95	1163	1.10	1226	1.25	1285	1.41	1341	1.58	1394	1.75
1600	773	0.45	879	0.59	970	0.73	1050	0.88	1123	1.04	1189	1.20	1252	1.36	1310	1.53	1365	1.70	1418	1.87
1700	807	0.52	910	0.67	999	0.82	1078	0.98	1150	1.14	1216	1.31	1277	1.48	1335	1.65	1390	1.83	1442	2.01
1800	841	0.59	942	0.75	1029	0.91	1106	1.08	1177	1.25	1242	1.42	1303	1.60	1361	1.78	1415	1.96	**1467**	**2.15**
1900	875	0.68	974	0.85	1059	1.02	1135	1.19	1205	1.37	1270	1.55	1330	1.73	1387	1.92	1441	2.11	1493	2.30
2000	910	0.77	1006	0.95	1090	1.13	1165	1.31	1234	1.49	1297	1.68	1357	1.87	1414	2.07	**1467**	**2.26**	–	–

STD Static – 560–854 RPM, 1.7 Max BHP | MED Static – 770–1175 RPM, 1.7 Max BHP | HIGH Static – 1035–1466 RPM, 2.4 Max BHP

Bold Face = Field Supplied Drive Required.

For more information, see General Fan Performance Notes on page 61.

FAN PERFORMANCE (cont.)

Table 48 – RGS060 — 1 PHASE — 5 TON VERTICAL SUPPLY

CFM	AVAILABLE EXTERNAL STATIC PRESSURE (in. wg)																			
	0.2		0.4		0.6		0.8		1.0		1.2		1.4		1.6		1.8		2.0	
	RPM	BHP	RPM	BHP	RPM	BHP	RPM	BHP	RPM	BHP	RPM	BHP	RPM	BHP	RPM	BHP	RPM	BHP	RPM	BHP
1500	848	0.42	968	0.55	1069	0.68	1158	0.80	1238	0.94	1312	1.07	1380	1.20	1445	1.34	1506	1.48	–	–
1625	897	0.51	1013	0.65	1111	0.79	1198	0.93	1277	1.07	1350	1.21	1418	1.35	1482	1.50	–	–	–	–
1750	947	0.61	1059	0.76	1155	0.91	1240	1.06	1318	1.21	1390	1.36	–	–	–	–	–	–	–	–
1875	997	0.72	1105	0.89	1199	1.05	1283	1.21	1359	1.37	–	–	–	–	–	–	–	–	–	–
2000	1048	0.85	1153	1.03	1244	1.20	1326	1.37	–	–	–	–	–	–	–	–	–	–	–	–
2125	1100	1.00	1201	1.19	1290	1.37	–	–	–	–	–	–	–	–	–	–	–	–	–	–
2250	1152	1.16	1250	1.36	–	–	–	–	–	–	–	–	–	–	–	–	–	–	–	–
2375	1205	1.34	–	–	–	–	–	–	–	–	–	–	–	–	–	–	–	–	–	–
2500	–	–	–	–	–	–	–	–	–	–	–	–	–	–	–	–	–	–	–	–

STD Static – 770–1175 RPM, 1.2 Max BHP

MED Static – 1035–1466 RPM, 1.5 Max BHP

Bold Face = Field Supplied Drive Required.

For more information, see General Fan Performance Notes on page 61.

NOTE: Production of single phase units has been discontinued per DOE regulations. Single phase RAS models are only available until current inventories are exhausted.

Table 49 – RGS060 — 1 PHASE — 5 TON HORIZONTAL SUPPLY

CFM	AVAILABLE EXTERNAL STATIC PRESSURE (in. wg)																			
	0.2		0.4		0.6		0.8		1.0		1.2		1.4		1.6		1.8		2.0	
	RPM	BHP	RPM	BHP	RPM	BHP	RPM	BHP	RPM	BHP	RPM	BHP	RPM	BHP	RPM	BHP	RPM	BHP	RPM	BHP
1500	800	0.39	904	0.49	999	0.60	1087	0.72	1169	0.85	1247	0.98	1320	1.13	1390	1.28	1457	1.44	–	–
1625	849	0.48	947	0.59	1038	0.70	1122	0.83	1201	0.96	1276	1.10	1348	1.24	1416	1.40	–	–	–	–
1750	899	0.59	992	0.70	1078	0.82	1159	0.95	1235	1.08	1308	1.22	1377	1.38	–	–	–	–	–	–
1875	950	0.70	1038	0.82	1120	0.95	1198	1.08	1271	1.22	1342	1.37	–	–	–	–	–	–	–	–
2000	1001	0.84	1085	0.96	1163	1.09	1238	1.23	1309	1.38	–	–	–	–	–	–	–	–	–	–
2125	1053	0.99	1133	1.12	1208	1.26	1280	1.40	–	–	–	–	–	–	–	–	–	–	–	–
2250	1106	1.16	1182	1.29	1254	1.44	–	–	–	–	–	–	–	–	–	–	–	–	–	–
2375	1159	1.34	1231	1.49	–	–	–	–	–	–	–	–	–	–	–	–	–	–	–	–
2500	–	–	–	–	–	–	–	–	–	–	–	–	–	–	–	–	–	–	–	–

STD Static – 770–1175 RPM, 1.2 Max BHP

MED Static – 1035–1466 RPM, 1.5 Max BHP

Bold Face = Field Supplied Drive Required.

For more information, see General Fan Performance Notes on page 61.

NOTE: Production of single phase units has been discontinued per DOE regulations. Single phase RAS models are only available until current inventories are exhausted.

Specifications subject to change without notice.

FAN PERFORMANCE (cont.)

Table 50 – RGS060 — 3 PHASE — 5 TON VERTICAL SUPPLY

CFM	AVAILABLE EXTERNAL STATIC PRESSURE (in. wg)																			
	0.2		0.4		0.6		0.8		1.0		1.2		1.4		1.6		1.8		2.0	
	RPM	BHP	RPM	BHP	RPM	BHP	RPM	BHP	RPM	BHP	RPM	BHP	RPM	BHP	RPM	BHP	RPM	BHP	RPM	BHP
1500	848	0.42	968	0.55	1069	0.68	1158	0.80	1238	0.94	1312	1.07	1380	1.20	1445	1.34	1506	1.48	1564	1.62
1625	897	0.51	1013	0.65	1111	0.79	1198	0.93	1277	1.07	1350	1.21	1418	1.35	1482	1.50	1542	1.64	1600	1.79
1750	947	0.61	1059	0.76	1155	0.91	1240	1.06	1318	1.21	1390	1.36	1457	1.51	1520	1.67	1580	1.83	1637	1.98
1875	997	0.72	1105	0.89	1199	1.05	1283	1.21	1359	1.37	1430	1.53	1496	1.69	1559	1.86	1618	2.02	1675	2.19
2000	1048	0.85	1153	1.03	1244	1.20	1326	1.37	1401	1.54	1471	1.72	1536	1.89	1598	2.06	1657	2.24	1713	2.41
2125	1100	1.00	1201	1.19	1290	1.37	1370	1.55	1444	1.73	1513	1.92	1577	2.10	1638	2.28	1696	2.47	1752	2.65
2250	1152	1.16	1250	1.36	1336	1.55	1415	1.75	1487	1.94	1555	2.13	1619	2.33	1679	2.52	1736	2.72	**1791**	**2.91**
2375	1205	1.34	1299	1.55	1384	1.76	1460	1.96	1532	2.17	1598	2.37	1661	2.57	1720	2.78	–	–	–	–
2500	1258	1.54	1349	1.76	1431	1.98	1506	2.20	1576	2.41	1642	2.63	1704	2.84	–	–	–	–	–	–

STD Static – 819–1251 RPM, 1.7 Max BHP

MED Static – 1035–1466 RPM, 1.7 Max BHP

HIGH Static – 1250–1687 RPM, 2.9 Max BHP

Bold Face = Field Supplied Drive Required.

For more information, see General Fan Performance Notes on page 61.

Table 51 – RGS060 — 3 PHASE — 5 TON HORIZONTAL SUPPLY

CFM	AVAILABLE EXTERNAL STATIC PRESSURE (in. wg)																			
	0.2		0.4		0.6		0.8		1.0		1.2		1.4		1.6		1.8		2.0	
	RPM	BHP	RPM	BHP	RPM	BHP	RPM	BHP	RPM	BHP	RPM	BHP	RPM	BHP	RPM	BHP	RPM	BHP	RPM	BHP
1500	800	0.39	904	0.49	999	0.60	1087	0.72	1169	0.85	1247	0.98	1320	1.13	1390	1.28	1457	1.44	1522	1.61
1625	849	0.48	947	0.59	1038	0.70	1122	0.83	1201	0.96	1276	1.10	1348	1.24	1416	1.40	1481	1.56	1544	1.73
1750	899	0.59	992	0.70	1078	0.82	1159	0.95	1235	1.08	1308	1.22	1377	1.38	1444	1.53	1507	1.70	1569	1.87
1875	950	0.70	1038	0.82	1120	0.95	1198	1.08	1271	1.22	1342	1.37	1409	1.52	1473	1.69	1536	1.86	1596	2.03
2000	1001	0.84	1085	0.96	1163	1.09	1238	1.23	1309	1.38	1377	1.53	1442	1.69	1505	1.86	1565	2.03	1624	2.21
2125	1053	0.99	1133	1.12	1208	1.26	1280	1.40	1348	1.55	1414	1.71	1477	1.87	1538	2.04	1597	2.22	1654	2.40
2250	1106	1.16	1182	1.29	1254	1.44	1323	1.59	1389	1.74	1452	1.91	1514	2.08	1573	2.25	1630	2.43	1686	2.62
2375	1159	1.34	1231	1.49	1300	1.64	1367	1.80	1430	1.96	1492	2.12	1551	2.30	1609	2.48	1665	2.66	1719	2.85
2500	1212	1.55	1281	1.70	1348	1.86	1412	2.02	1473	2.19	1533	2.36	1591	2.54	1647	2.73	–	–	–	–

STD Static – 819–1251 RPM, 1.7 Max BHP

MED Static – 1035–1466 RPM, 1.7 Max BHP

HIGH Static – 1250–1687 RPM, 2.9 Max BHP

Bold Face = Field Supplied Drive Required.

For more information, see General Fan Performance Notes on page 61.

Specifications subject to change without notice.

FAN PERFORMANCE (cont.)

Table 52 – RGS072 — 3 PHASE — 6 TON VERTICAL SUPPLY

CFM	AVAILABLE EXTERNAL STATIC PRESSURE (in. wg)																			
	0.2		0.4		0.6		0.8		1.0		1.2		1.4		1.6		1.8		2.0	
	RPM	BHP	RPM	BHP	RPM	BHP	RPM	BHP	RPM	BHP	RPM	BHP	RPM	BHP	RPM	BHP	RPM	BHP	RPM	BHP
1800	**967**	**0.63**	1075	0.80	1170	0.97	1255	1.13	1333	1.28	1406	1.43	1475	1.58	1540	1.72	1601	1.87	1660	2.00
1950	**1029**	**0.77**	1132	0.96	1223	1.14	1306	1.32	1382	1.49	1454	1.65	1521	1.82	1585	1.98	1645	2.13	1703	2.29
2100	1091	0.93	1189	1.14	1278	1.33	1358	1.52	1433	1.71	1502	1.89	1568	2.07	1631	2.25	1690	2.42	1747	2.59
2250	1154	1.11	1248	1.33	1333	1.55	1411	1.75	1484	1.96	1552	2.15	1617	2.35	1678	2.54	1737	2.73	–	–
2400	1218	1.32	1308	1.55	1390	1.78	1466	2.01	1537	2.23	1603	2.44	1666	2.65	1727	2.86	1784	3.06	–	–
2550	1283	1.55	1369	1.80	1448	2.05	1521	2.29	1590	2.52	1655	2.75	1717	2.98	1776	3.20	–	–	–	–
2700	1348	1.80	1431	2.07	1507	2.33	1578	2.59	1645	2.84	1709	3.09	1769	3.33	1827	3.57	–	–	–	–
2850	1414	2.09	1493	2.37	1566	2.65	1636	2.92	1701	3.19	1763	3.45	–	–	–	–	–	–	–	–
3000	1479	2.40	1556	2.70	1627	3.00	1694	3.29	1757	3.57	–	–	–	–	–	–	–	–	–	–

STD Static – 1073–1457 RPM, 2.4 Max BHP

MED Static – 1173–1518 RPM, 2.9 Max BHP

HIGH Static – 1474–1788 RPM, 3.7 Max BHP

Bold Face = Field Supplied Drive Required.

For more information, see General Fan Performance Notes on page 61.

Table 53 – RGS072 — 3 PHASE — 6 TON HORIZONTAL SUPPLY

CFM	AVAILABLE EXTERNAL STATIC PRESSURE (in. wg)																			
	0.2		0.4		0.6		0.8		1.0		1.2		1.4		1.6		1.8		2.0	
	RPM	BHP	RPM	BHP	RPM	BHP	RPM	BHP	RPM	BHP	RPM	BHP	RPM	BHP	RPM	BHP	RPM	BHP	RPM	BHP
1800	**913**	**0.64**	**1010**	**0.80**	1098	0.98	1178	1.16	1252	1.35	1322	1.56	1388	1.77	1451	1.98	1510	2.21	1568	2.44
1950	972	0.78	**1065**	**0.96**	1148	1.14	1226	1.34	1298	1.54	1366	1.75	1430	1.97	1491	2.20	1550	2.43	1606	2.67
2100	1032	0.95	1120	1.14	1200	1.33	1275	1.54	1345	1.75	1411	1.97	1473	2.20	1533	2.43	1590	2.67	1645	2.92
2250	1093	1.14	1177	1.34	1254	1.55	1325	1.76	1393	1.98	1457	2.21	1518	2.45	1576	2.69	1632	2.94	1686	3.20
2400	1155	1.36	1234	1.57	1308	1.78	1377	2.01	1443	2.24	1505	2.48	1564	2.73	1621	2.98	1676	3.24	1729	3.51
2550	1217	1.60	1293	1.82	1363	2.05	1430	2.28	1494	2.53	1554	2.78	1612	3.03	1667	3.30	1721	3.57	–	–
2700	1280	1.87	1352	2.10	1420	2.34	1484	2.59	1546	2.84	1604	3.10	1660	3.37	1715	3.64	–	–	–	–
2850	1343	2.17	1412	2.42	1477	2.67	1539	2.93	1599	3.19	1656	3.46	1710	3.74	–	–	–	–	–	–
3000	1406	2.50	1472	2.76	1535	3.03	1595	3.29	1653	3.57	–	–	–	–	–	–	–	–	–	–

STD Static – 1073–1457 RPM, 2.4 Max BHP

MED Static – 1173–1518 RPM, 2.9 Max BHP

HIGH Static – 1474–1788 RPM, 3.7 Max BHP

Bold Face = Field Supplied Drive Required.

For more information, see General Fan Performance Notes on page 61.

Specifications subject to change without notice.

FAN PERFORMANCE (cont.)

Table 54 – RGS090/091 — 3 PHASE — 7.5 TON VERTICAL SUPPLY

CFM	AVAILABLE EXTERNAL STATIC PRESSURE (in. wg)																			
	0.2		0.4		0.6		0.8		1.0		1.2		1.4		1.6		1.8		2.0	
	RPM	BHP	RPM	BHP	RPM	BHP	RPM	BHP	RPM	BHP	RPM	BHP	RPM	BHP	RPM	BHP	RPM	BHP	RPM	BHP
2250	513	0.54	595	0.76	665	1.01	728	1.27	786	1.56	839	1.86	889	2.18	935	2.52	980	2.87	1022	3.23
2438	541	0.65	620	0.89	688	1.14	750	1.42	806	1.71	858	2.02	907	2.35	953	2.70	997	3.06	1039	3.43
2625	570	0.77	645	1.02	712	1.29	772	1.58	827	1.88	878	2.20	926	2.54	972	2.89	1015	3.26	1056	3.64
2813	600	0.91	672	1.18	736	1.46	794	1.76	848	2.07	899	2.40	946	2.75	991	3.11	1033	3.49	1074	3.88
3000	629	1.07	699	1.35	761	1.64	818	1.95	871	2.28	920	2.62	966	2.98	1010	3.35	1052	3.74	1093	4.14
3188	660	1.25	726	1.54	787	1.85	842	2.17	894	2.51	942	2.86	987	3.23	1031	3.61	1072	4.01	1112	4.42[1]
3375	690	1.45	754	1.75	813	2.07	867	2.41	917	2.76	964	3.12	1009	3.50	1052	3.89	1093	4.30	–	–
3563	721	1.67	783	1.98	840	2.32	892	2.67	941	3.03	988	3.41	1032	3.80	1074	4.20	1114	4.61	–	–
3750	752	1.91	812	2.24	867	2.59	918	2.95	966	3.32	1011	3.71	1054	4.11	1096	4.53	–	–	–	–

STD Static – 489–747 RPM, 1.7 Max BHP | MED Static – 733–949 RPM, 2.9 Max BHP | HIGH Static – 909–1102 RPM, 4.7 Max BHP

Bold Face = Field Supplied Drive Required.

For more information, see General Fan Performance Notes on page 61.

Table 55 – RGS090/091 — 3 PHASE — 7.5 TON HORIZONTAL SUPPLY

CFM	AVAILABLE EXTERNAL STATIC PRESSURE (in. wg)																			
	0.2		0.4		0.6		0.8		1.0		1.2		1.4		1.6		1.8		2.0	
	RPM	BHP	RPM	BHP	RPM	BHP	RPM	BHP	RPM	BHP	RPM	BHP	RPM	BHP	RPM	BHP	RPM	BHP	RPM	BHP
2250	505	0.52	586	0.73	657	0.97	722	1.22	782	1.50	838	1.81	891	2.12	941	2.46	988	2.82	1033	3.19
2438	533	0.62	610	0.85	679	1.09	742	1.36	800	1.65	854	1.96	906	2.28	955	2.63	1001	2.99	1046	3.37
2625	562	0.74	635	0.98	701	1.23	762	1.51	819	1.81	872	2.12	922	2.46	970	2.81	1016	3.17	1060	3.56
2813	591	0.88	661	1.13	725	1.39	783	1.68	839	1.98	890	2.31	940	2.65	986	3.01	1031	3.38	1074	3.77
3000	621	1.03	688	1.29	749	1.57	806	1.87	859	2.18	910	2.51	958	2.86	1004	3.23	1048	3.61	1090	4.01
3188	652	1.21	715	1.48	774	1.77	829	2.07	881	2.40	930	2.74	977	3.10	1022	3.47	1065	3.86	1107	4.26[1]
3375	682	1.40	743	1.68	800	1.98	853	2.30	903	2.63	951	2.99	997	3.35	1041	3.74	1083	4.13	1124	4.54
3563	713	1.61	772	1.91	826	2.22	878	2.55	927	2.89	973	3.26	1018	3.63	1061	4.02	1103	4.43	–	–
3750	745	1.85	801	2.15	853	2.48	903	2.82	951	3.18	996	3.55	1040	3.93	1082	4.34	–	–	–	–

STD Static – 489–747 RPM, 1.7 Max BHP | MED Static – 733–949 RPM, 2.9 Max BHP | HIGH Static – 909–1102 RPM, 4.7 Max BHP

Bold Face = Field Supplied Drive Required.

For more information, see General Fan Performance Notes on page 61.

Specifications subject to change without notice.

FAN PERFORMANCE (cont.)

Table 56 – RAS101/102 — 3 PHASE — 8.5 TON VERTICAL SUPPLY

CFM	AVAILABLE EXTERNAL STATIC PRESSURE (in. wg)																			
	0.2		0.4		0.6		0.8		1.0		1.2		1.4		1.6		1.8		2.0	
	RPM	BHP	RPM	BHP	RPM	BHP	RPM	BHP	RPM	BHP	RPM	BHP	RPM	BHP	RPM	BHP	RPM	BHP	RPM	BHP
2550	526	0.51	600	0.65	666	0.79	727	0.93	783	1.07	836	1.20	886	1.34	934	1.48	979	1.61	1022	1.74
2763	557	0.62	627	0.77	690	0.92	749	1.08	804	1.23	855	1.37	904	1.52	950	1.67	995	1.82	1037	1.97
2975	588	0.75	655	0.91	716	1.08	772	1.24	825	1.40	875	1.56	923	1.72	968	1.88	1012	2.04	1053	2.20
3188	621	0.90	684	1.07	743	1.25	797	1.42	848	1.60	897	1.77	943	1.94	987	2.11	1030	2.29	1071	2.46
3400	653	1.06	714	1.25	770	1.44	822	1.62	872	1.81	919	1.99	964	2.18	1007	2.36	1049	2.55	1089	2.73[1]
3613	687	1.25	744	1.45	798	1.65	849	1.84	897	2.04	943	2.24	986	2.44	1029	2.63	1069	2.83	1108	3.02
3825	720	1.45	775	1.67	827	1.88	876	2.09	922	2.30	967	2.51	1010	2.71	1051	2.92	1090	3.13	1129	3.34
4038	754	1.69	807	1.91	856	2.13	904	2.35	949	2.57	992	2.80	1034	3.02	1074	3.24	1112	3.46	1150	3.68
4250	788	1.94	839	2.17	886	2.41	932	2.64	976	2.88	1018	3.11	1058	3.34	1097	3.57	–	–	–	–

STD Static – 518–733 RPM, 1.7 Max BHP | MED Static – 690–936 RPM, 2.4 Max BHP | HIGH Static – 838–1084 RPM, 3.7 Max BHP

Bold Face = Field Supplied Drive Required.

For more information, see General Fan Performance Notes on page 61.

Table 57 – RAS101/102 — 3 PHASE — 8.5 TON HORIZONTAL SUPPLY

CFM	AVAILABLE EXTERNAL STATIC PRESSURE (in. wg)																			
	0.2		0.4		0.6		0.8		1.0		1.2		1.4		1.6		1.8		2.0	
	RPM	BHP	RPM	BHP	RPM	BHP	RPM	BHP	RPM	BHP	RPM	BHP	RPM	BHP	RPM	BHP	RPM	BHP	RPM	BHP
2550	497	0.48	579	0.61	651	0.75	717	0.90	777	1.05	833	1.21	886	1.38	936	1.56	984	1.74	1029	1.93
2763	524	0.58	602	0.72	671	0.87	735	1.03	794	1.19	849	1.36	900	1.53	950	1.72	996	1.90	1041	2.10
2975	551	0.70	626	0.86	693	1.01	754	1.18	812	1.35	865	1.52	916	1.70	964	1.89	1010	2.09	1054	2.29
3188	580	0.84	651	1.00	716	1.17	775	1.34	831	1.52	883	1.70	933	1.89	980	2.09	1025	2.29	1068	2.50
3400	609	1.00	677	1.17	739	1.35	797	1.53	851	1.71	902	1.90	950	2.10	996	2.30	1041	2.51	1083	2.73
3613	638	1.17	703	1.35	763	1.54	819	1.73	871	1.93	921	2.13	969	2.33	1014	2.54	1057	2.76	1099	2.98[2]
3825	668	1.37	730	1.56	788	1.76	842	1.96	893	2.16	941	2.37	988	2.58	1032	2.80	1075	3.02	1116	3.25
4038	698	1.59	758	1.79	813	2.00	866	2.20	915	2.42	963	2.63	1008	2.86	1051	3.08	1093	3.31	1133	3.55
4250	728	1.83	786	2.04	839	2.26	890	2.47	938	2.70	984	2.92	1029	3.15	1071	3.39	1112	3.63	–	–

STD Static – 518–733 RPM, 1.7 Max BHP | MED Static – 690–936 RPM, 2.4 Max BHP | HIGH Static – 838–1084 RPM, 3.7 Max BHP

Bold Face = Field Supplied Drive Required.

For more information, see General Fan Performance Notes on page 61.

Specifications subject to change without notice.

FAN PERFORMANCE (cont.)

Table 58 – RGS120/121 — 3 PHASE — 10 TON VERTICAL SUPPLY

CFM	AVAILABLE EXTERNAL STATIC PRESSURE (in. wg)																			
	0.2		0.4		0.6		0.8		1.0		1.2		1.4		1.6		1.8		2.0	
	RPM	BHP	RPM	BHP	RPM	BHP	RPM	BHP	RPM	BHP	RPM	BHP	RPM	BHP	RPM	BHP	RPM	BHP	RPM	BHP
3000	616	0.79	689	0.97	757	1.16	821	1.36	882	1.57	939	1.79	994	2.01	1047	2.24	1098	2.47	1147	2.71
3250	655	0.96	724	1.16	788	1.37	849	1.58	907	1.80	962	2.03	1015	2.26	1066	2.50	1115	2.75	1163	3.00
3500	695	1.17	760	1.38	821	1.60	879	1.83	934	2.06	987	2.30	1038	2.54	1088	2.80	1135	3.05	1181	3.32
3750	736	1.41	797	1.63	855	1.86	910	2.10	963	2.35	1014	2.60	1063	2.86	1111	3.12	1157	3.39	1202	3.66
4000	777	1.68	834	1.91	889	2.16	942	2.41	993	2.67	1042	2.93	1090	3.20	1136	3.48	1180	3.76	1224	4.04
4250	818	1.98	873	2.23	925	2.49	976	2.75	1025	3.02	1072	3.30	1118	3.58	1162	3.87	1205	4.16	1247	4.46
4500	860	2.32	912	2.58	962	2.85	1010	3.13	1057	3.41	1103	3.70	1147	4.00	1190	4.29	1232	4.60	–	–
4750	902	2.69	951	2.97	999	3.26	1046	3.55	1091	3.84	1135	4.14	1177	4.45	–	–	–	–	–	–
5000	944	3.11	991	3.40	1037	3.70	1082	4.00	1125	4.31	1167	4.63	–	–	–	–	–	–	–	–

STD Static – 591–838 RPM, 2.4 Max BHP

MED Static – 838–1084 RPM, 3.7 Max BHP

HIGH Static – 1022–1240 RPM, 4.7 Max BHP

Bold Face = Field Supplied Drive Required.

For more information, see General Fan Performance Notes on page 61.

Table 59 – RGS120/121 — 3 PHASE — 10 TON HORIZONTAL SUPPLY

CFM	AVAILABLE EXTERNAL STATIC PRESSURE (in. wg)																			
	0.2		0.4		0.6		0.8		1.0		1.2		1.4		1.6		1.8		2.0	
	RPM	BHP	RPM	BHP	RPM	BHP	RPM	BHP	RPM	BHP	RPM	BHP	RPM	BHP	RPM	BHP	RPM	BHP	RPM	BHP
3000	**579**	**0.70**	660	0.89	732	1.09	799	1.29	860	1.50	917	1.70	970	1.91	1021	2.13	1070	2.34	1117	2.56
3250	613	0.85	690	1.06	760	1.27	823	1.49	883	1.71	938	1.93	991	2.16	1041	2.38	1089	2.61	1134	2.85
3500	648	1.03	721	1.25	788	1.48	850	1.71	907	1.95	961	2.18	1013	2.42	1062	2.66	1108	2.91	1153	3.15
3750	683	1.23	753	1.47	817	1.71	877	1.96	933	2.21	985	2.46	1035	2.71	1083	2.97	1129	3.23	1173	3.49
4000	719	1.45	786	1.71	848	1.97	905	2.23	959	2.50	1011	2.76	1059	3.03	1106	3.30	1151	3.58	1194	3.85
4250	756	1.71	819	1.98	879	2.26	934	2.53	987	2.81	1037	3.09	1084	3.38	1130	3.66	1174	3.95	1216	4.24
4500	792	1.99	853	2.28	910	2.57	964	2.87	1015	3.16	1064	3.46	1110	3.76	1155	4.06	1198	4.36	1239	4.66
4750	830	2.31	888	2.62	943	2.92	995	3.23	1044	3.54	1091	3.85	1137	4.16	1180	4.48	–	–	–	–
5000	867	2.66	923	2.98	976	3.30	1026	3.63	1074	3.95	1120	4.28	1164	4.61	–	–	–	–	–	–

STD Static – 591–838 RPM, 2.4 Max BHP

MED Static – 838–1084 RPM, 3.7 Max BHP

HIGH Static – 1022–1240 RPM, 4.7 Max BHP

Bold Face = Field Supplied Drive Required.

For more information, see General Fan Performance Notes on page 61.

Specifications subject to change without notice.

FAN PERFORMANCE (cont.)

Table 60 – RGS150 — 3 PHASE — 12.5 TON VERTICAL SUPPLY

CFM	AVAILABLE EXTERNAL STATIC PRESSURE (in. wg)																			
	0.2		0.4		0.6		0.8		1.0		1.2		1.4		1.6		1.8		2.0	
	RPM	BHP	RPM	BHP	RPM	BHP	RPM	BHP	RPM	BHP	RPM	BHP	RPM	BHP	RPM	BHP	RPM	BHP	RPM	BHP
3438	685	1.12	751	1.32	813	1.54	871	1.76	927	1.99	981	2.23	1032	2.47	1082	2.72	1130	2.97	1177	3.23
3750	736	1.41	797	1.63	855	1.86	910	2.10	963	2.35	1014	2.60	1063	2.86	1111	3.12	1157	3.39	1202	3.66
4063	787	1.75	844	1.99	898	2.24	951	2.49	1001	2.75	1049	3.02	1097	3.29	1142	3.57	1186	3.85	1230	4.14
4375	839	2.14	892	2.40	943	2.67	993	2.94	1041	3.21	1087	3.49	1132	3.78	1176	4.08	1218	4.37	1260	4.68
4688	891	2.60	941	2.87	990	3.15	1037	3.44	1082	3.73	1126	4.03	1169	4.33	1211	4.64	–	–	–	–
5000	944	3.11	991	3.40	1037	3.70	1082	4.00	1125	4.31	1167	4.63	–	–	–	–	–	–	–	–
5313	997	3.69	1042	4.00	1085	4.32	1128	4.64	–	–	–	–	–	–	–	–	–	–	–	–
5625	1051	4.34	1093	4.67	–	–	–	–	–	–	–	–	–	–	–	–	–	–	–	–
5938	–	–	–	–	–	–	–	–	–	–	–	–	–	–	–	–	–	–	–	–
6250	–	–	–	–	–	–	–	–	–	–	–	–	–	–	–	–	–	–	–	–

STD Static – 652–843 RPM, 2.9 Max BHP

MED Static – 838–1084 RPM, 3.7 Max BHP

HIGH Static – 1022–1240 RPM, 4.7 Max BHP

Bold Face = Field Supplied Drive Required.

For more information, see General Fan Performance Notes on page 61.

Table 61 – RGS150 — 3 PHASE — 12.5 TON HORIZONTAL SUPPLY

CFM	AVAILABLE EXTERNAL STATIC PRESSURE (in. wg)																			
	0.2		0.4		0.6		0.8		1.0		1.2		1.4		1.6		1.8		2.0	
	RPM	BHP	RPM	BHP	RPM	BHP	RPM	BHP	RPM	BHP	RPM	BHP	RPM	BHP	RPM	BHP	RPM	BHP	RPM	BHP
3438	639	0.98	713	1.20	781	1.43	843	1.65	901	1.88	955	2.12	1007	2.35	1056	2.59	1103	2.83	1148	3.08
3750	683	1.23	753	1.47	817	1.71	877	1.96	933	2.21	985	2.46	1035	2.71	1083	2.97	1129	3.23	1173	3.49
4063	728	1.52	794	1.78	855	2.04	912	2.31	966	2.57	1017	2.84	1066	3.12	1112	3.39	1157	3.67	1200	3.95
4375	774	1.85	836	2.13	894	2.41	949	2.70	1001	2.98	1050	3.27	1097	3.56	1142	3.86	1186	4.15	1228	4.45
4688	820	2.23	879	2.53	935	2.83	987	3.14	1037	3.44	1084	3.75	1130	4.06	1174	4.37	1216	4.68		
5000	867	2.66	923	2.98	976	3.30	1026	3.63	1074	3.95	1120	4.28	1164	4.61	–	–				
5313	914	3.15	967	3.49	1018	3.83	1066	4.17	1112	4.52	–	–	–	–	–	–	–	–	–	–
5625	962	3.69	1012	4.05	1061	4.42	–	–	–	–	–	–	–		–	–	–	–	–	–
5938	1009	4.30	1058	4.68	–	–	–	–	–	–	–	–	–	–	–	–	–	–	–	–
6250	–	–	–	–	–	–	–	–	–	–	–	–	–	–	–	–	–	–	–	–

STD Static – 652–843 RPM, 2.9 Max BHP

MED Static – 838–1084 RPM, 3.7 Max BHP

HIGH Static – 1022–1240 RPM, 4.7 Max BHP

Bold Face = Field Supplied Drive Required.

For more information, see General Fan Performance Notes on page 61.

Specifications subject to change without notice.

FAN PERFORMANCE (cont.)

Table 62 – RGS180 — 3 PHASE — 15 TON VERTICAL SUPPLY

CFM	AVAILABLE EXTERNAL STATIC PRESSURE (in. wg)																			
	0.2		0.4		0.6		0.8		1.0		1.2		1.4		1.6		1.8		2.0	
	RPM	BHP	RPM	BHP	RPM	BHP	RPM	BHP	RPM	BHP	RPM	BHP	RPM	BHP	RPM	BHP	RPM	BHP	RPM	BHP
4500	**487**	**0.98**	552	1.26	610	1.55	665	1.86	718	2.20	769	2.56	819	2.95	866	3.36	912	3.79	957	4.24
4875	515	1.18	578	1.49	633	1.80	685	2.13	735	2.47	784	2.84	831	3.23	877	3.65	921	4.09	**964**	**4.54**
5250	544	1.42	604	1.75	657	2.09	707	2.43	754	2.78	800	3.16	845	3.56	889	3.98	932	4.43	**974**	**4.89**
5625	572	1.68	631	2.05	682	2.40	730	2.76	775	3.13	819	3.52	862	3.93	903	4.36	944	4.81	**985**	**5.28**
6000	601	1.98	657	2.37	707	2.75	753	3.13	797	3.52	839	3.92	880	4.34	920	4.77	**959**	**5.23**	**997**	**5.70**
6375	630	2.31	684	2.73	733	3.13	777	3.53	819	3.94	860	4.36	899	4.79	937	5.23	**975**	**5.70**	–	–
6750	659	2.68	711	3.12	759	3.55	802	3.98	843	4.40	882	4.84	920	5.28	957	5.74	–	–	–	–
7125	689	3.09	739	3.55	785	4.01	827	4.46	867	4.91	904	5.36	941	5.82	–	–	–	–	–	–
7500	718	3.53	766	4.02	811	4.51	852	4.98	891	5.46	928	5.93	–	–	–	–	–	–	–	–

STD Static – 507–676 RPM, 2.9 Max BHP | MED Static – 627–851 RPM, 3.7 Max BHP | HIGH Static – 776–955 RPM, 6.1 Max BHP

Bold Face = Field Supplied Drive Required.

For more information, see General Fan Performance Notes on page 61.

Table 63 – RGS180 — 3 PHASE — 15 TON HORIZONTAL SUPPLY

CFM	AVAILABLE EXTERNAL STATIC PRESSURE (in. wg)																			
	0.2		0.4		0.6		0.8		1.0		1.2		1.4		1.6		1.8		2.0	
	RPM	BHP	RPM	BHP	RPM	BHP	RPM	BHP	RPM	BHP	RPM	BHP	RPM	BHP	RPM	BHP	RPM	BHP	RPM	BHP
4500	**479**	**0.97**	540	1.23	596	1.50	651	1.80	703	2.13	755	2.48	805	2.87	853	3.28	900	3.72	945	4.17
4875	508	1.19	566	1.47	619	1.75	670	2.06	719	2.39	768	2.75	815	3.14	862	3.55	907	3.99	951	4.45
5250	537	1.43	592	1.73	643	2.03	691	2.35	737	2.69	783	3.06	828	3.45	872	3.86	916	4.30	**958**	**4.77**
5625	566	1.71	619	2.03	667	2.35	713	2.68	757	3.03	800	3.40	843	3.80	885	4.21	926	4.66	**967**	**5.12**
6000	596	2.02	646	2.36	692	2.70	736	3.05	778	3.41	819	3.79	860	4.19	900	4.61	939	5.06	**978**	**5.53**
6375	625	2.36	674	2.73	718	3.09	760	3.46	800	3.83	840	4.23	878	4.63	916	5.06	954	5.51	**991**	**5.98**
6750	655	2.75	701	3.14	744	3.52	785	3.91	824	4.30	861	4.70	898	5.12	935	5.56	**971**	**6.01**	–	–
7125	685	3.17	729	3.58	771	3.99	810	4.40	848	4.81	884	5.23	919	5.66	–	–	–	–	–	–
7500	715	3.64	758	4.07	798	4.50	836	4.93	872	5.36	907	5.79	–	–	–	–	–	–	–	–

STD Static – 507–676 RPM, 2.9 Max BHP | MED Static – 627–851 RPM, 3.7 Max BHP | HIGH Static – 776–955 RPM, 6.1 Max BHP

Bold Face = Field Supplied Drive Required.

For more information, see General Fan Performance Notes on page 61.

Specifications subject to change without notice.

Table 64 – PULLEY ADJUSTMENT

UNIT		MOTOR/DRIVE COMBO	MOTOR PULLEY TURNS OPEN (RPM)										
			0.0	0.5	1.0	1.5	2.0	2.5	3.0	3.5	4.0	4.5	5.0
036	1 phase*	Standard Static	854	825	795	766	736	707	678	648	619	589	560
		Medium Static	1175	1135	1094	1054	1013	973	932	892	851	811	770
		High Static	–	–	–	–	–	–	–	–	–	–	–
	3 phase	Standard Static	854	825	795	766	736	707	678	648	619	589	560
		Medium Static	1175	1135	1094	1054	1013	973	932	892	851	811	770
		High Static	1466	1423	1380	1337	1294	1251	1207	1164	1121	1078	1035
048	1 phase*	Standard Static	854	825	795	766	736	707	678	648	619	589	560
		Medium Static	1175	1135	1094	1054	1013	973	932	892	851	811	770
		High Static	–	–	–	–	–	–	–	–	–	–	–
	3 phase	Standard Static	854	825	795	766	736	707	678	648	619	589	560
		Medium Static	1175	1135	1094	1054	1013	973	932	892	851	811	770
		High Static	1466	1423	1380	1337	1294	1251	1207	1164	1121	1078	1035
060	1 phase*	Standard Static	1175	1135	1094	1054	1013	973	932	892	851	811	770
		Medium Static	1466	1423	1380	1337	1294	1251	1207	1164	1121	1078	1035
		High Static	–	–	–	–	–	–	–	–	–	–	–
	3 phase	Standard Static	1175	1135	1094	1054	1013	973	932	892	851	811	770
		Medium Static	1466	1423	1380	1337	1294	1251	1207	1164	1121	1078	1035
		High Static	1687	1649	1610	1572	1533	1495	1457	1418	1380	1341	1303
072	3 phase	Standard Static	1457	1419	1380	1342	1303	1265	1227	1188	1150	1111	1073
		Medium Static	1518	1484	1449	1415	1380	1346	1311	1277	1242	1208	1173
		High Static	1788	1757	1725	1694	1662	1631	1600	1568	1537	1505	1474
90/91	3 phase	Standard Static	747	721	695	670	644	618	592	566	541	515	489
		Medium Static	949	927	906	884	863	841	819	798	776	755	733
		High Static	1102	1083	1063	1044	1025	1006	986	967	948	928	909
101/102	3 phase	Standard Static	733	712	690	669	647	626	604	583	561	540	518
		Medium Static	936	911	887	862	838	813	788	764	739	715	690
		High Static	1084	1059	1035	1010	986	961	936	912	887	863	838
120/121	3 phase	Standard Static	838	813	789	764	739	715	690	665	640	616	591
		Medium Static	1084	1059	1035	1010	986	961	936	912	887	863	838
		High Static	1240	1218	1196	1175	1153	1131	1109	1087	1066	1044	1022
150	3 phase	Standard Static	843	824	805	786	767	748	728	709	690	671	652
		Medium Static	1084	1059	1035	1010	986	961	936	912	887	863	838
		High Static	1240	1218	1196	1175	1153	1131	1109	1087	1066	1044	1022
180	3 phase	Standard Static	676	659	642	625	608	592	575	558	541	524	507
		Medium Static	851	829	806	784	761	739	717	694	672	649	627
		High Static	955	937	919	901	883	866	848	830	812	794	776

NOTE: Do not adjust pulley further than 5 turns open.

– Factory settings

* Single phase voltage models have been discontinued per DOE regulations and are only available until current inventories are exhausted.

ELECTRICAL INFORMATION

Table 65 – RGS036 SINGLE STAGE COOLING WITH SINGLE SPEED INDOOR FAN MOTOR 3 TONS

V–Ph–Hz	VOLTAGE RANGE		COMP (ea)		OFM (ea)		IFM		
	MIN	MAX	RLA	LRA	WATTS	FLA	TYPE	EFF at Full Load	FLA
208–1–60*	187	253	16.6	79	325	1.5	STD	67%	4.9
					325	1.5	MED	67%	4.9
230–1–60*	187	253	16.6	79	325	1.5	STD	67%	4.9
					325	1.5	MED	67%	4.9
208–3–60	187	253	10.4	73	325	1.5	DD–STD	78%	6.0
					325	1.5	STD	75%	5.2
					325	1.5	MED	75%	5.2
					325	1.5	HIGH	87%	6.9
230–3–60	187	253	10.4	73	325	1.5	DD–STD	78%	6.0
					325	1.5	MED	75%	5.2
					325	1.5	HIGH	87%	6.7
460–3–60	414	506	5.8	38	325	0.8	STD	75%	2.6
					325	0.8	MED	75%	2.6
					325	0.8	HIGH	87%	3.4
575–3–60	518	633	3.8	37	325	0.6	STD	73%	2.4
					325	0.6	MED	73%	2.4
					325	0.6	HIGH	78%	2.0

* Production of single phase voltage models has been discontinued per DOE regulations. Single phase RGS models are only available until current inventory is exhausted.

Table 66 – RGS048 SINGLE STAGE COOLING WITH SINGLE SPEED INDOOR FAN MOTOR 4 TONS

V–Ph–Hz	VOLTAGE RANGE		COMP (ea)		OFM (ea)		IFM		
	MIN	MAX	RLA	LRA	WATTS	FLA	TYPE	EFF at Full Load	FLA
208–1–60*	187	253	21.8	117	325	1.5	STD	67%	4.9
					325	1.5	MED	67%	4.9
230–1–60*	187	253	21.8	117	325	1.5	STD	67%	4.9
					325	1.5	MED	67%	4.9
208–3–60	187	253	13.7	83	325	1.5	DD–STD	78%	6.0
					325	1.5	STD	75%	5.2
					325	1.5	MED	75%	5.2
					325	1.5	HIGH	87%	6.9
230–3–60	187	253	13.7	83	325	1.5	DD–STD	78%	6.0
					325	1.5	STD	75%	5.2
					325	1.5	MED	75%	5.2
					325	1.5	HIGH	87%	6.7
460–3–60	414	506	6.2	41	325	0.8	STD	75%	2.6
					325	0.8	MED	75%	2.6
					325	0.8	HIGH	87%	3.4
575–3–60	518	633	4.8	33	325	0.6	STD	73%	2.4
					325	0.6	MED	73%	2.4
					325	0.6	HIGH	78%	2.0

* Production of single phase voltage models has been discontinued per DOE regulations. Single phase RGS models are only available until current inventory is exhausted.

Table 67 – RGS060 SINGLE STAGE COOLING WITH SINGLE SPEED INDOOR FAN MOTOR 5 TONS

V–Ph–Hz	VOLTAGE RANGE		COMP (ea)		OFM (ea)		IFM		
	MIN	MAX	RLA	LRA	WATTS	FLA	TYPE	EFF at Full Load	FLA
208–1–60*	187	253	26.2	134	325	1.5	STD	67%	4.9
					325	1.5	MED	76%	7.0
230–1–60*	187	253	26.2	134	325	1.5	STD	67%	4.9
					325	1.5	MED	76%	7.0
208–3–60	187	253	15.6	110	325	1.5	DD–STD	78%	7.6
					325	1.5	STD	75%	5.2
					325	1.5	MED	87%	6.9
					325	1.5	HIGH	89%	8.4
230–3–60	187	253	15.6	110	325	1.5	DD–STD	78%	7.6
					325	1.5	STD	75%	5.2
					325	1.5	MED	87%	6.7
					325	1.5	HIGH	89%	8.3
460–3–60	414	506	7.7	52	325	0.8	STD	75%	2.6
					325	0.8	MED	87%	3.4
					325	0.8	HIGH	89%	4.2
575–3–60	518	633	5.8	39	325	0.6	STD	73%	2.4
					325	0.6	MED	78%	2.0
					325	0.6	HIGH	77%	2.8

* Production of single phase voltage models has been discontinued per DOE regulations. Single phase RGS models are only available until current inventory is exhausted.

Table 68 – RGS072 SINGLE STAGE COOLING WITH SINGLE SPEED INDOOR FAN MOTOR 6 TONS

(Units Produced on or Prior to 02/08/2015)

V–Ph–Hz	VOLTAGE RANGE		COMP (ea)		OFM (ea)		IFM		
	MIN	MAX	RLA	LRA	WATTS	FLA	TYPE	EFF at Full Load	FLA
208–3–60	187	253	19.0	123	325	1.5	STD	87%	6.9
					325	1.5	MED	89%	8.4
					325	1.5	HIGH	87%	10.6
230–3–60	187	253	19.0	123	325	1.5	STD	87%	6.7
					325	1.5	MED	89%	8.3
					325	1.5	HIGH	87%	10.6
460–3–60	414	506	9.7	62	325	0.8	STD	87%	3.4
					325	0.8	MED	89%	4.2
					325	0.8	HIGH	87%	5.3
575–3–60	518	633	7.4	50	325	0.6	STD	78%	2.0
					325	0.6	MED	77%	2.8
					325	0.6	HIGH	77%	2.8

(Units Produced Between 02/09/2015 and 06/17/2015)

V–Ph–Hz	VOLTAGE RANGE		COMP		OFM		IFM		
	MIN	MAX	RLA	LRA	WATTS	FLA	TYPE	EFF at Full Load	FLA
208–3–60	187	253	19.6	136	325	1.5	STD	87%	6.9
					325	1.5	MED	89%	8.4
					325	1.5	HIGH	87%	10.6
230–3–60	187	253	19.6	136	325	1.5	STD	87%	6.7
					325	1.5	MED	89%	8.3
					325	1.5	HIGH	87%	10.6
460–3–60	414	506	8.2	66	325	0.8	STD	87%	3.4
					325	0.8	MED	89%	4.2
					325	0.8	HIGH	87%	5.3
575–3–60	518	633	6.6	55	325	0.6	STD	78%	2.0
					325	0.6	MED	77%	2.8
					325	0.6	HIGH	77%	2.8

(Units Produced on or After 06/18/2015)

V–Ph–Hz	VOLTAGE RANGE		COMP		OFM		IFM		
	MIN	MAX	RLA	LRA	WATTS	FLA	TYPE	EFF at Full Load	FLA
208–3–60	187	253	19.6	136	325	1.5	STD	69%	5.2
					325	1.5	MED	89%	8.4
					325	1.5	HIGH	87%	10.6
230–3–60	187	253	19.6	136	325	1.5	STD	69%	5.2
					325	1.5	MED	89%	8.3
					325	1.5	HIGH	87%	10.6
460–3–60	414	506	8.2	66	325	0.8	STD	69%	2.6
					325	0.8	MED	89%	4.2
					325	0.8	HIGH	87%	5.3
575–3–60	518	633	6.6	55	325	0.6	STD	78%	2.0
					325	0.6	MED	77%	2.8
					325	0.6	HIGH	77%	2.8

Specifications subject to change without notice.

Table 69 – RGS091 SINGLE STAGE COOLING WITH SINGLE SPEED INDOOR FAN MOTOR 7.5 TONS

V–Ph–Hz	VOLTAGE RANGE		COMP (ea)		OFM (ea)		IFM		
	MIN	MAX	RLA	LRA	WATTS	FLA	TYPE	EFF at Full Load	FLA
208–3–60	187	253	25.0	164	325	1.5	STD	75%	5.2
					325	1.5	MED	89%	8.4
					325	1.5	HIGH	83%	13.6
230–3–60	187	253	25.0	164	325	1.5	STD	75%	5.2
					325	1.5	MED	89%	8.3
					325	1.5	HIGH	83%	12.7
460–3–60	414	506	12.2	100	325	0.8	STD	75%	2.6
					325	0.8	MED	89%	4.2
					325	0.8	HIGH	83%	6.4
575–3–60	518	633	9.0	78	325	0.6	STD	72%	1.6
					325	0.6	MED	77%	2.8
					325	0.6	HIGH	81%	5.6

Table 70 – RGS090 2–STAGE COOLING WITH SINGLE SPEED INDOOR FAN MOTOR 7.5 TONS

V–Ph–Hz	VOLTAGE RANGE		COMP (Cir 1)		COMP (Cir 2)		OFM (ea)		IFM		
	MIN	MAX	RLA	LRA	RLA	LRA	WATTS	FLA	TYPE	EFF at Full Load	FLA
208–3–60	187	253	13.6	83	13.6	83	325	1.5	STD	75%	5.2
							325	1.5	MED	89%	8.4
							325	1.5	HIGH	83%	13.6
230–3–60	187	253	13.6	83	13.6	83	325	1.5	STD	75%	5.2
							325	1.5	MED	89%	8.3
							325	1.5	HIGH	83%	12.7
460–3–60	414	506	6.1	41	6.1	41	325	0.8	STD	75%	5.2
							325	0.8	MED	89%	4.2
							325	0.8	HIGH	83%	6.4
575–3–60	518	633	4.2	33	4.2	33	325	0.6	STD	72%	1.6
							325	0.6	MED	77%	2.8
							325	0.6	HIGH	81%	5.6

Table 71 – RGS090 2–STAGE COOLING WITH 2 SPEED INDOOR FAN MOTOR 7.5 TONS

V–Ph–Hz	VOLTAGE RANGE		COMP 1		COMP 2		OFM (ea)		IFM		
	MIN	MAX	RLA	LRA	RLA	LRA	WATTS	FLA	TYPE	EFF at Full Load	FLA
208–3–60	187	253	13.6	83	13.6	83	325	1.5	STD	84%	5.8
							325	1.5	MED	85%	8.6
							325	1.5	HIGH	84%	13.6
230–3–60	187	253	13.6	83	13.6	83	325	1.5	STD	84%	5.6
							325	1.5	MED	85%	7.8
							325	1.5	HIGH	84%	12.7
460–3–60	414	506	6.1	41	6.1	41	325	0.8	STD	79%	2.9
							325	0.8	MED	85%	3.8
							325	0.8	HIGH	84%	6.4
575–3–60	518	633	4.2	33	4.2	33	325	0.6	STD	81%	2.8
							325	0.6	MED	84%	4.5
							325	0.6	HIGH	83%	6.2

Table 72 – RGS101 SINGLE STAGE COOLING WITH SINGLE SPEED INDOOR FAN MOTOR 8.5 TONS

V–Ph–Hz	VOLTAGE RANGE		COMP (ea)		OFM (ea)		IFM		
	MIN	MAX	RLA	LRA	WATTS	FLA	TYPE	EFF at Full Load	FLA
208–3–60	187	253	29.5	195	325	1.5	STD	75%	5.2
					325	1.5	MED	87%	6.9
					325	1.5	HIGH	87%	10.6
230–3–60	187	253	29.5	195	325	1.5	STD	75%	5.2
					325	1.5	MED	87%	6.7
					325	1.5	HIGH	87%	10.6
460–3–60	414	506	14.7	95	325	0.8	STD	75%	2.6
					325	0.8	MED	87%	3.4
					325	0.8	HIGH	87%	5.3
575–3–60	518	633	12.2	80	325	0.6	STD	72%	1.6
					325	0.6	MED	78%	2.0

Table 73 – RGS102 2–STAGE COOLING WITH SINGLE SPEED INDOOR FAN MOTOR 8.5 TONS

V–Ph–Hz	VOLTAGE RANGE		COMP (Cir 1)		COMP (Cir 2)		OFM (ea)		IFM		
	MIN	MAX	RLA	LRA	RLA	LRA	WATTS	FLA	TYPE	EFF at Full Load	FLA
208–3–60	187	253	14.5	98	13.7	83	325	1.5	STD	75%	5.2
							325	1.5	MED	87%	6.9
							325	1.5	HIGH	87%	10.6
230–3–60	187	253	14.5	98	13.7	83	325	1.5	STD	75%	5.2
							325	1.5	MED	87%	6.7
							325	1.5	HIGH	87%	10.6
460–3–60	414	506	6.3	55	6.2	41	325	0.8	STD	75%	2.6
							325	0.8	MED	87%	3.4
							325	0.8	HIGH	87%	5.3
575–3–60	518	633	6.0	41	4.8	33	325	0.6	STD	72%	1.6
							325	0.6	MED	78%	2.0
							325	0.6	HIGH	77%	2.8

Table 74 – RGS102 2–STAGE COOLING WITH 2 SPEED INDOOR FAN MOTOR 8.5 TONS

V–Ph–Hz	VOLTAGE RANGE		COMP 1		COMP 2		OFM (ea)		IFM		
	MIN	MAX	RLA	LRA	RLA	LRA	WATTS	FLA	TYPE	EFF at Full Load	FLA
208–3–60	187	253	14.5	98	13.7	83	325	1.5	STD	84%	5.8
							325	1.5	MED	77%	7.1
							325	1.5	HIGH	82%	10.8
230–3–60	187	253	14.5	98	13.7	83	325	1.5	STD	84%	5.6
							325	1.5	MED	77%	6.8
							325	1.5	HIGH	82%	9.8
460–3–60	414	506	6.3	55	6.2	41	325	0.8	STD	79%	2.9
							325	0.8	MED	77%	3.4
							325	0.8	HIGH	82%	4.9
575–3–60	518	633	6.0	41	4.8	33	325	0.6	STD	81%	2.8
							325	0.6	MED	80%	3.5
							325	0.6	HIGH	84%	4.5

Specifications subject to change without notice.

Table 75 – RGS121 1–STAGE COOLING WITH SINGLE SPEED INDOOR FAN MOTOR 10 TONS

V–Ph–Hz	VOLTAGE RANGE		COMP (ea)		OFM (ea)		IFM		
	MIN	MAX	RLA	LRA	WATTS	FLA	TYPE	EFF at Full Load	FLA
208–3–60	187	253	30.1	225	325	1.5	STD	69%	5.2
					325	1.5	MED	87%	10.6
					325	1.5	HIGH	83%	13.6
230–3–60	187	253	30.1	225	325	1.5	STD	69%	5.2
					325	1.5	MED	87%	10.6
					325	1.5	HIGH	83%	12.7
460–3–60	414	506	16.7	114	325	0.8	STD	69%	2.6
					325	0.8	MED	87%	5.3
					325	0.8	HIGH	83%	6.4
575–3–60	518	633	12.2	80	325	0.6	STD	78%	2.0
					325	0.6	MED	77%	2.8
					325	0.6	HIGH	81%	5.6

Table 76 – RGS120 2–STAGE COOLING WITH SINGLE SPEED INDOOR FAN MOTOR 10 TONS

V–Ph–Hz	VOLTAGE RANGE		COMP (Cir 1)		COMP (Cir 2)		OFM (ea)		IFM		
	MIN	MAX	RLA	LRA	RLA	LRA	WATTS	FLA	TYPE	EFF at Full Load	FLA
208–3–60	187	253	15.6	110	15.9	110	325	1.5	STD	69%	5.2
							325	1.5	MED	87%	10.6
							325	1.5	HIGH	83%	13.6
230–3–60	187	253	15.6	110	15.9	110	325	1.5	STD	69%	5.2
							325	1.5	MED	87%	10.6
							325	1.5	HIGH	83%	12.7
460–3–60	414	506	7.7	52	7.7	52	325	0.8	STD	69%	2.6
							325	0.8	MED	87%	5.3
							325	0.8	HIGH	83%	6.4
575–3–60	518	633	5.8	39	5.7	39	325	0.6	STD	78%	2.0
							325	0.6	MED	77%	2.8
							325	0.6	HIGH	81%	5.6

Table 77 – RGS120 2–STAGE COOLING WITH 2 SPEED INDOOR FAN MOTOR 10 TONS

V–Ph–Hz	VOLTAGE RANGE		COMP 1		COMP 2		OFM (ea)		IFM		
	MIN	MAX	RLA	LRA	RLA	LRA	WATTS	FLA	TYPE	EFF at Full Load	FLA
208–3–60	187	253	15.6	110	15.9	110	325	1.5	STD	77%	7.1
							325	1.5	MED	82%	10.8
							325	1.5	HIGH	84%	13.6
230–3–60	187	253	15.6	110	15.9	110	325	1.5	STD	77%	6.8
							325	1.5	MED	82%	9.8
							325	1.5	HIGH	84%	12.7
460–3–60	414	506	7.7	52	7.7	52	325	0.8	STD	77%	3.8
							325	0.8	MED	82%	4.9
							325	0.8	HIGH	84%	6.4
575–3–60	518	633	5.8	39	5.7	39	325	0.6	STD	80%	3.5
							325	0.6	MED	84%	4.5
							325	0.6	HIGH	83%	6.2

Table 78 – RGS150 2–STAGE COOLING WITH SINGLE SPEED INDOOR FAN MOTOR 12.5 TONS

(Units Produced on or Prior to 02/15/2015)

V–Ph–Hz	VOLTAGE RANGE		COMP (Cir 1)		COMP (Cir 2)		OFM (ea)		IFM		
	MIN	MAX	RLA	LRA	RLA	LRA	WATTS	FLA	TYPE	EFF at Full Load	FLA
208–3–60	187	253	19.0	123	22.4	149	1070	6.2	STD	89%	8.4
							1070	6.2	MED	87%	10.6
							1070	6.2	HIGH	83%	13.6
230–3–60	187	253	19.0	123	22.4	149	1070	6.2	STD	89%	8.3
							1070	6.2	MED	87%	10.6
							1070	6.2	HIGH	83%	12.7
460–3–60	414	506	9.7	62	10.6	75	1070	3.1	STD	89%	4.2
							1070	3.1	MED	87%	5.3
							1070	3.1	HIGH	83%	6.4
575–3–60	518	633	7.4	50	7.7	54	1070	2.5	STD	77%	2.8
							1070	2.5	MED	77%	2.8
							1070	2.5	HIGH	81%	5.6

(Units Produced On or After 02/16/2015)

V–Ph–Hz	VOLTAGE RANGE		COMP (Cir 1)		COMP (Cir 2)		OFM (ea)		IFM		
	MIN	MAX	RLA	LRA	RLA	LRA	WATTS	FLA	TYPE	EFF at Full Load	FLA
208–3–60	187	253	19.6	136	22.4	149	1070	6.2	STD	89%	8.4
							1070	6.2	MED	87%	10.6
							1070	6.2	HIGH	83%	13.6
230–3–60	187	253	19.6	136	22.4	149	1070	6.2	STD	89%	8.3
							1070	6.2	MED	87%	10.6
							1070	6.2	HIGH	83%	12.7
460–3–60	414	506	8.2	66	10.6	75	1070	3.1	STD	89%	4.2
							1070	3.1	MED	87%	5.3
							1070	3.1	HIGH	83%	6.4
575–3–60	518	633	6.6	55	7.7	54	1070	2.5	STD	77%	2.8
							1070	2.5	MED	77%	2.8
							1070	2.5	HIGH	81%	5.6

Table 79 – RGS150 2–STAGE COOLING WITH 2 SPEED INDOOR FAN MOTOR 12.5 TONS

(Units Produced on or Prior to 02/15/2015)

V–Ph–Hz	VOLTAGE RANGE		COMP 1		COMP 2		OFM (ea)		IFM		
	MIN	MAX	RLA	LRA	RLA	LRA	WATTS	FLA	TYPE	EFF at Full Load	FLA
208–3–60	187	253	19.0	123	22.4	149	1070	6.2	STD	85%	8.6
							1070	6.2	MED	82%	10.8
							1070	6.2	HIGH	84%	13.6
230–3–60	187	253	19.0	123	22.4	149	1070	6.2	STD	85%	7.8
							1070	6.2	MED	82%	9.8
							1070	6.2	HIGH	84%	12.7
460–3–60	414	506	9.7	62	10.6	75	1070	3.1	STD	85%	3.8
							1070	3.1	MED	82%	4.9
							1070	3.1	HIGH	84%	6.4
575–3–60	518	633	7.4	50	7.7	54	1070	2.5	STD	84%	4.5
							1070	2.5	MED	84%	4.5
							1070	2.5	HIGH	83%	6.2

Specifications subject to change without notice.

RGS150 2–STAGE COOLING WITH 2 SPEED INDOOR FAN MOTOR 12.5 TONS
(Units Produced On or After 02/16/2015)

V–Ph–Hz	VOLTAGE RANGE		COMP (Cir 1)		COMP (Cir 2)		OFM (ea)		IFM		
	MIN	MAX	RLA	LRA	RLA	LRA	WATTS	FLA	TYPE	EFF at Full Load	FLA
208–3–60	187	253	19.6	136	22.4	149	1070	6.2	STD	85%	8.6
							1070	6.2	MED	82%	10.8
							1070	6.2	HIGH	84%	13.6
230–3–60	187	253	19.6	136	22.4	149	1070	6.2	STD	85%	7.8
							1070	6.2	MED	82%	9.8
							1070	6.2	HIGH	84%	12.7
460–3–60	414	506	8.2	66	10.6	75	1070	3.1	STD	85%	3.8
							1070	3.1	MED	82%	4.9
							1070	3.1	HIGH	84%	6.4
575–3–60	518	633	6.6	55	7.7	54	1070	2.5	STD	84%	4.5
							1070	2.5	MED	84%	4.5
							1070	2.5	HIGH	83%	6.2

Table 80 – RGS180 2–STAGE COOLING WITH SINGLE SPEED INDOOR FAN MOTOR 15 TONS

V–Ph–Hz	VOLTAGE RANGE		COMP (Cir 1)		COMP (Cir 2)		OFM (ea)		IFM		
	MIN	MAX	RLA	LRA	RLA	LRA	WATTS	FLA	TYPE	EFF at Full Load	FLA
208–3–60	187	253	25.0	164	25.0	164	280	1.5	STD	89%	8.4
							280	1.5	MED	87%	10.6
							280	1.5	HIGH	90%	20.4
230–3–60	187	253	25.0	164	25.0	164	280	1.5	STD	89%	8.3
							280	1.5	MED	87%	10.6
							280	1.5	HIGH	90%	20.4
460–3–60	414	506	12.2	100	12.8	100	280	0.8	STD	89%	4.2
							280	0.8	MED	87%	5.3
							280	0.8	HIGH	90%	10.2
575–3–60	518	633	9.8	78	9.6	78	280	0.6	STD	77%	2.8
							280	0.6	MED	77%	2.8
							280	0.6	HIGH	94%	9.0

Table 81 – RGS180 2–STAGE COOLING WITH 2 SPEED INDOOR FAN MOTOR 15 TONS

V–Ph–Hz	VOLTAGE RANGE		COMP 1		COMP 2		OFM (ea)		IFM		
	MIN	MAX	RLA	LRA	RLA	LRA	WATTS	FLA	TYPE	EFF at Full Load	FLA
208–3–60	187	253	25.0	164	25.0	164	280	1.5	STD	85%	8.6
							280	1.5	MED	82%	10.8
							280	1.5	HIGH	90%	20.4
230–3–60	187	253	25.0	164	25.0	164	280	1.5	STD	85%	7.8
							280	1.5	MED	82%	9.8
							280	1.5	HIGH	90%	20.4
460–3–60	414	506	12.2	100	12.8	100	280	0.8	STD	85%	3.8
							280	0.8	MED	82%	4.9
							280	0.8	HIGH	90%	10.2
575–3–60	518	633	9.8	78	9.6	78	280	0.6	STD	84%	4.5
							280	0.6	MED	84%	4.5
							280	0.6	HIGH	94%	9

ELECTRICAL INFORMATION cont.

Table 82 – UNIT WIRE/FUSE OR HACR BREAKER SIZING DATA WITH SINGLE SPEED INDOOR FAN MOTOR

UNIT	NOM. V–Ph–Hz	IFM TYPE	NO C.O. or UNPWR C.O.								w/ PWRD C.O.							
			NO P.E.				w/ P.E. (pwrd fr/ unit)				NO P.E.				w/ P.E. (pwrd fr/ unit)			
			MCA	MAX FUSE or HACR BRKR	DISC. SIZE		MCA	MAX FUSE or HACR BRKR	DISC. SIZE		MCA	MAX FUSE or HACR BRKR	DISC. SIZE		MCA	MAX FUSE or HACR BRKR	DISC. SIZE	
					FLA	LRA			FLA	LRA			FLA	LRA			FLA	LRA
036	208/230–1–60 †	STD	28	40	26	95	30	45	29	97	–	–	–	–	–	–	–	–
		MED	28	40	26	95	30	45	29	97	–	–	–	–	–	–	–	–
	208/230–3–60	DD–STD	21	30	21	83	23	30	23	85	26	30	26	88	28	30	28	90
		STD	20	30	20	96	22	30	22	98	25	30	25	101	27	30	27	103
		MED	20	30	20	96	22	30	22	98	25	30	25	101	27	30	27	103
		HIGH	20	30	20	107	22	30	22	109	25	30	25	112	27	30	27	114
	460–3–60	STD	11	15	11	49	12	15	12	50	13	15	13	51	14	20	14	52
		MED	11	15	11	49	12	15	12	50	13	15	13	51	14	20	14	52
		HIGH	11	15	11	55	12	15	12	56	13	15	13	57	14	20	14	58
	575–3–60	STD	8	15	8	46	10	15	10	48	10	15	10	48	12	15	12	50
		MED	8	15	8	46	10	15	10	48	10	15	10	48	12	15	12	50
		HIGH	8	15	7	50	10	15	10	52	10	15	9	52	11	15	12	54
048	208/230–1–60 †	STD	34	50	32	133	36	50	35	135	–	–	–	–	–	–	–	–
		MED	34	50	32	133	36	50	35	135	–	–	–	–	–	–	–	–
	208/230–3–60	DD–STD	25	30	24	93	27	30	27	95	30	40	30	98	32	45	32	100
		STD	24	30	23	106	26	30	26	108	29	40	29	111	31	40	31	113
		MED	24	30	23	106	26	30	26	108	29	40	29	111	31	40	31	113
		HIGH	24	30	23	117	26	30	26	119	29	40	29	122	31	40	31	124
	460–3–60	STD	12	15	11	52	13	15	12	53	14	15	14	54	15	20	15	55
		MED	12	15	11	52	13	15	12	53	14	15	14	54	15	20	15	55
		HIGH	12	15	11	58	13	15	12	59	14	15	14	60	15	20	15	61
	575–3–60	STD	9	15	9	42	11	15	11	44	11	15	11	44	13	15	13	46
		MED	9	15	9	42	11	15	11	44	11	15	11	44	13	15	13	46
		HIGH	9	15	9	46	11	15	11	48	11	15	10	48	13	15	13	50
060	208/230–1–60 †	STD	40	60	37	150	42	60	40	152	–	–	–	–	–	–	–	–
		MED	42	60	40	175	44	60	42	177	–	–	–	–	–	–	–	–
	208/230–3–60	DD–STD	29	40	28	122	31	45	31	124	34	45	34	127	36	50	36	129
		STD	27	40	26	133	29	40	28	135	31	45	31	138	33	45	33	140
		MED	27	40	26	133	29	40	28	135	31	45	31	138	33	45	33	140
		HIGH	29	40	28	170	31	45	30	172	34	45	34	175	36	50	36	177
	460–3–60	STD	13	20	13	63	14	20	14	64	16	20	15	65	17	20	16	66
		MED	13	20	13	63	14	20	14	64	16	20	15	65	17	20	16	66
		HIGH	14	20	14	82	15	20	15	83	16	20	16	84	17	20	17	85
	575–3–60	STD	11	15	10	48	13	15	12	50	12	15	12	50	14	20	14	52
		MED	11	15	10	48	13	15	12	50	12	15	12	50	14	20	14	52
		HIGH	11	15	11	63	13	15	13	65	13	15	13	65	15	20	15	67

See “Legend and Notes for Tables 82 and 83” on page 92.

† Single phase units have been discontinued per DOE regulations. Single phase RGS models are only available until current inventories are exhausted.

Specifications subject to change without notice.

ELECTRICAL INFORMATION cont.

TABLE 82 – UNIT WIRE/FUSE OR HACR BREAKER SIZING DATA WITH SINGLE SPEED INDOOR FAN MOTOR (CONT.)

UNIT	NOM. V–Ph–Hz	IFM TYPE	NO C.O. or UNPWR C.O.								w/ PWRD C.O.							
			NO P.E.				w/ P.E. (pwrd fr/ unit)				NO P.E.				w/ P.E. (pwrd fr/ unit)			
			MCA	MAX FUSE or HACR BRKR	DISC. SIZE		MCA	MAX FUSE or HACR BRKR	DISC. SIZE		MCA	MAX FUSE or HACR BRKR	DISC. SIZE		MCA	MAX FUSE or HACR BRKR	DISC. SIZE	
					FLA	LRA			FLA	LRA			FLA	LRA			FLA	LRA
072 Units built on or prior to 02/08/2015	208/230–3–60	STD	33/32	50/50	32/31	184	35/34	50/50	34/33	186	37/37	50/50	37/37	189	39/39	50/50	39/39	191
		MED	34/34	50/50	33/33	199	36/36	50/50	35/35	201	39/39	50/50	39/39	204	41/41	50/50	41/41	206
		HIGH	36	50	36	213	38	50	38	215	41	50	41	218	43	60	43	220
	460–3–60	STD	17	25	16	92	18	25	17	93	19	25	19	94	20	25	20	95
		MED	18	25	17	100	19	25	18	101	20	25	19	102	21	30	21	103
		HIGH	19	25	18	107	20	25	19	108	21	30	21	109	22	30	22	110
	575–3–60	STD	12	15	12	63	14	20	14	65	14	20	13	65	16	20	16	67
		MED	13	20	12	74	15	20	15	76	15	20	14	76	17	20	17	78
		HIGH	13	20	12	74	15	20	15	76	15	20	14	76	17	20	17	78
072 Units built between 02/09/2015 and 05/17/2015	208/230–3–60	STD	33/33	50/50	32/32	197	35/35	50/50	34/34	199	38/38	50/50	38/37	202	40/40	50/50	40/40	204
		MED	35/35	50/50	34/34	212	37/37	50/50	36/36	214	40/40	50/50	39/39	217	42/41	60/60	42/42	219
		HIGH	37	50	36	226	39	50	39	228	42	60	42	231	44	60	44	233
	460–3–60	STD	15	20	14	96	16	20	15	97	17	20	17	98	18	25	18	99
		MED	16	20	15	104	17	20	16	105	18	25	18	106	19	25	19	107
		HIGH	17	20	16	111	18	25	18	112	19	25	19	113	20	25	20	114
	575–3–60	STD	11	15	11	68	13	15	13	70	13	15	13	70	15	20	15	72
		MED	12	15	12	79	14	20	14	81	14	15	13	81	16	20	16	83
		HIGH	12	15	12	79	14	20	14	81	14	15	13	81	16	20	16	83
072 Units built on or after 05/18/2015	208/230–3–60	STD	32	50	30	170	34	50	32	172	36	50	36	175	38	50	38	177
		MED	35/35	50/50	34/34	212	37/37	50/50	36/36	214	40/40	50/50	39/39	217	42/41	60/60	42/42	219
		HIGH	37	50	36	226	39	50	39	228	42	60	42	231	44	60	44	233
	460–3–60	STD	14	20	13	83	15	20	14	84	16	20	16	85	17	25	17	86
		MED	16	20	15	104	17	20	16	105	18	25	18	106	19	25	19	107
		HIGH	17	20	16	111	18	25	18	112	19	25	19	113	20	25	20	114
	575–3–60	STD	11	15	11	68	13	15	13	70	13	15	13	70	15	20	15	72
		MED	12	15	12	79	14	20	14	81	14	15	13	81	16	20	16	83
		HIGH	12	15	12	79	14	20	14	81	14	15	13	81	16	20	16	83

See “Legend and Notes for Tables 82 and 83” on page 92.

Specifications subject to change without notice.

ELECTRICAL INFORMATION cont.

Table 82 – UNIT WIRE/FUSE OR HACR BREAKER SIZING DATA WITH SINGLE SPEED INDOOR FAN MOTOR (cont.)

UNIT	NOM. V–Ph–Hz	IFM TYPE	NO C.O. or UNPWR C.O.								w/ PWRD C.O.							
			NO P.E.				w/ P.E. (pwrd fr/ unit)				NO P.E.				w/ P.E. (pwrd fr/ unit)			
			MCA	MAX FUSE or HACR BRKR	DISC. SIZE		MCA	MAX FUSE or HACR BRKR	DISC. SIZE		MCA	MAX FUSE or HACR BRKR	DISC. SIZE		MCA	MAX FUSE or HACR BRKR	DISC. SIZE	
					FLA	LRA			FLA	LRA			FLA	LRA			FLA	LRA
091	208/230–3–60	STD	40	60	38	191	44	60	43	195	45	60	44	196	49	60	48	200
		MED	43/43	60/60	42/42	244	47/47	60/60	46/46	248	48/48	60/60	47/47	249	52/52	60/60	52/52	253
		HIGH	48/47	60/60	48/47	260	52/51	60/60	52/51	264	53/52	60/60	53/52	265	57/56	80/80	58/57	269
	460–3–60	STD	20	30	19	113	22	30	21	115	22	30	21	115	24	30	23	117
		MED	22	30	21	140	23	30	23	142	24	30	23	142	26	30	25	144
		HIGH	24	30	23	148	26	30	25	150	26	30	26	150	28	35	28	152
	575–3–60	STD	15	20	14	89	18	25	18	93	16	20	16	91	20	25	20	95
		MED	16	20	15	104	20	25	19	108	17	25	17	106	21	25	21	110
		HIGH	19	25	18	118	22	30	23	122	20	25	20	120	24	30	24	124
090	208/230–3–60	STD	39	50	41	193	43	50	45	197	44	50	46	198	48	60	51	202
		MED	42/42	50/50	44/44	246	46/46	50/50	49/49	250	47/47	60/60	50/50	251	51/51	60/60	54/54	255
		HIGH	48/47	60/50	50/49	262	51/51	60/60	55/54	266	52/52	60/60	56/55	267	56/55	60/60	60/59	271
	460–3–60	STD	18	20	19	95	20	25	21	97	21	25	21	97	22	25	23	99
		MED	20	25	21	122	22	25	23	124	22	25	23	124	24	30	25	126
		HIGH	22	25	23	130	24	30	25	132	24	30	26	132	26	30	28	134
	575–3–60	STD	13	15	13	77	17	20	17	81	14	15	15	79	18	20	19	83
		MED	14	15	14	92	18	20	19	96	16	20	16	94	19	25	21	98
		HIGH	17	20	17	106	21	25	22	110	19	20	19	108	23	25	24	112
101	208/230–3–60	STD	46	60	43	222	49	60	48	226	50	60	49	227	54	80	53	231
		MED	47/47	60/60	45/45	260	51/51	60/60	50/49	264	52/52	60/60	51/51	265	56/56	80/80	55/55	269
		HIGH	51	60	50	289	55	80	54	293	56	80	55	294	60	80	59	298
	460–3–60	STD	23	30	22	108	25	30	24	110	25	30	24	110	27	40	26	112
		MED	24	30	23	127	26	30	25	129	26	30	25	129	28	40	27	131
		HIGH	26	30	25	142	28	40	27	144	28	40	27	144	30	40	29	146
	575–3–60	STD	19	30	17	91	22	30	22	95	20	30	19	93	24	30	24	97
		MED	19	30	18	95	23	30	22	99	21	30	20	97	24	30	24	101
		HIGH	20	30	19	106	24	30	23	110	21	30	21	108	25	30	25	112
102	208/230–3–60	STD	40	50	42	208	44	50	46	212	45	50	47	213	49	60	52	217
		MED	42/42	50/50	44/44	246	46/46	60/50	48/48	250	47/47	60/60	49/49	251	51/51	60/60	54/53	255
		HIGH	46	50	48	275	50	60	52	279	51	60	54	280	54	60	58	284
	460–3–60	STD	19	20	19	109	21	25	21	111	21	25	22	111	23	25	24	113
		MED	20	25	20	128	21	25	22	130	22	25	23	130	24	25	25	132
		HIGH	21	25	22	143	23	25	24	145	24	25	25	145	25	30	27	147
	575–3–60	STD	16	20	16	85	19	25	20	89	17	20	18	87	21	25	22	91
		MED	16	20	16	89	20	25	20	93	18	20	18	91	21	25	22	95
		HIGH	17	20	17	100	21	25	21	104	18	20	19	102	22	25	23	106

See “Legend and Notes for Tables 82 and 83” on page 92.

Specifications subject to change without notice.

ELECTRICAL INFORMATION cont.

Table 82 – UNIT WIRE/FUSE OR HACR BREAKER SIZING DATA WITH SINGLE SPEED INDOOR FAN MOTOR (cont.)

UNIT	NOM. V–Ph–Hz	IFM TYPE	NO C.O. or UNPWR C.O.								w/ PWRD C.O.							
			NO P.E.				w/ P.E. (pwrd fr/ unit)				NO P.E.				w/ P.E. (pwrd fr/ unit)			
			MCA	MAX FUSE or HACR BRKR	DISC. SIZE		MCA	MAX FUSE or HACR BRKR	DISC. SIZE		MCA	MAX FUSE or HACR BRKR	DISC. SIZE		MCA	MAX FUSE or HACR BRKR	DISC. SIZE	
					FLA	LRA			FLA	LRA			FLA	LRA			FLA	LRA
121	208/230–3–60	STD	46	60	44	263	50	60	48	267	51	60	50	268	55	80	54	272
		MED	52	60	50	319	55	80	55	323	56	80	56	324	60	80	60	328
		HIGH	55/54	80/80	54/53	321	58/58	80/80	58/57	325	59/59	80/80	59/58	326	63/62	80/80	64/63	330
	460–3–60	STD	26	30	24	133	27	40	26	135	28	40	27	135	30	45	29	137
		MED	28	40	27	161	30	45	29	163	30	45	30	163	32	45	32	165
		HIGH	29	45	28	162	31	45	30	164	32	45	31	164	33	45	33	166
	575–3–60	STD	19	30	18	95	23	30	22	99	21	30	20	97	24	30	24	101
		MED	20	30	19	106	24	30	23	110	21	30	21	108	25	30	25	112
		HIGH	23	30	22	120	26	30	26	124	24	30	24	122	28	35	28	126
120	208/230–3–60	STD	44	50	46	258	48	60	50	262	49	60	51	263	53	60	56	267
		MED	50	60	52	314	53	60	56	318	54	60	57	319	58	70	62	323
		HIGH	53/52	60/60	55/54	316	56/55	60/60	60/59	320	57/56	70/60	61/60	321	61/60	70/70	65/64	325
	460–3–60	STD	22	25	23	123	24	30	25	125	24	30	25	125	26	30	27	127
		MED	25	30	26	151	26	30	28	153	27	30	28	153	29	35	30	155
		HIGH	26	30	27	152	28	30	29	154	28	30	29	154	30	35	32	156
	575–3–60	STD	17	20	17	93	20	25	21	97	18	20	19	95	22	25	23	99
		MED	17	20	18	104	21	25	22	108	19	25	20	106	23	25	24	110
		HIGH	20	25	21	118	24	30	25	122	22	25	23	120	26	30	27	124

See “Legend and Notes for Tables 82 and 83” on page 92.

Specifications subject to change without notice.

Table 82 – UNIT WIRE/FUSE OR HACR BREAKER SIZING DATA WITH SINGLE SPEED INDOOR FAN MOTOR (cont.)

UNIT	NOM. V–Ph–Hz	IFM TYPE	NO C.O. or UNPWR C.O.								w/ PWRD C.O.							
			NO P.E.				w/ P.E. (pwrd fr/ unit)				NO P.E.				w/ P.E. (pwrd fr/ unit)			
			MCA	MAX FUSE or HACR BRKR	DISC. SIZE		MCA	MAX FUSE or HACR BRKR	DISC. SIZE		MCA	MAX FUSE or HACR BRKR	DISC. SIZE		MCA	MAX FUSE or HACR BRKR	DISC. SIZE	
150 Units built on or prior to 02/15/2015	208/230–3–60	STD	62/62	80/80	64/64	376	66/66	80/80	69/69	380	67/67	80/80	70/70	381	71/71	80/80	74/74	385
		MED	64	80	67	390	68	80	71	394	69	80	72	395	73	80	77	399
		HIGH	67/66	80/80	70/69	392	71/70	80/80	75/74	396	–	–	–	–	–	–	–	–
	460–3–60	STD	31	40	32	189	33	40	34	191	33	40	34	191	35	40	36	193
		MED	32	40	33	196	34	40	35	198	34	40	36	198	36	45	38	200
		HIGH	33	40	34	197	35	40	36	199	35	45	37	199	37	45	39	201
	575–3–60	STD	23	30	23	142	27	30	28	146	24	30	25	144	28	30	30	148
		MED	23	30	23	142	27	30	28	146	24	30	25	144	28	30	30	148
		HIGH	26	30	27	156	29	35	31	160	27	30	29	158	31	35	33	162
150 Units built on or after 02/16/2015	208/230–3–60	STD	63/63	80/80	65/65	389	66/66	80/80	69/69	393	67/67	80/80	71/70	394	71/71	80/80	75/75	398
		MED	65	80	68	403	69	80	72	407	70	80	73	408	73	80	78	412
		HIGH	68/67	80/80	71/70	405	72/71	80/80	75/74	409	–	–	–	–	–	–	–	–
	460–3–60	STD	29	35	30	193	31	40	32	195	31	40	33	195	33	40	35	197
		MED	30	40	31	200	32	40	33	202	33	40	34	202	34	40	36	204
		HIGH	31	40	33	201	33	40	35	203	34	40	35	203	35	45	37	205
	575–3–60	STD	22	25	23	147	26	30	27	151	24	30	24	149	27	30	29	153
		MED	22	25	23	147	26	30	27	151	24	30	24	149	27	30	29	153
		HIGH	25	30	26	161	29	35	30	165	26	30	28	163	30	35	32	167
180	208/230–3–60	STD	70/70	80/80	72/72	412	73/73	80/80	77/77	416	74/74	90/90	78/78	417	78/78	100/100	82/82	421
		MED	72	80	75	426	76	100	79	430	77	100	80	431	80	100	85	435
		HIGH	82	100	86	432	85	100	91	436	86	100	92	437	90	100	96	441
	460–3–60	STD	35	45	36	242	37	45	38	244	37	45	39	244	39	50	41	246
		MED	36	45	38	249	38	50	40	251	39	50	40	251	40	50	42	253
		HIGH	41	50	43	252	43	50	45	254	43	50	46	254	45	50	48	256
	575–3–60	STD	27	30	28	184	31	40	32	188	29	35	30	186	32	40	34	190
		MED	27	30	28	184	31	40	32	188	29	35	30	186	32	40	34	190
		HIGH	33	40	35	196	37	45	39	200	35	40	37	198	39	45	41	202

See “Legend and Notes for Tables 82 and 83” on page 92.

Specifications subject to change without notice.

ELECTRICAL INFORMATION cont.

Table 83 – UNIT WIRE/FUSE OR HACR BREAKER SIZING DATA WITH 2 SPEED INDOOR FAN MOTOR

UNIT	NOM. V–Ph–Hz	IFM TYPE	NO C.O. or UNPWR C.O.								w/ PWRD C.O.							
			NO P.E.				w/ P.E. (pwrd fr/ unit)				NO P.E.				w/ P.E. (pwrd fr/ unit)			
			MCA	MAX FUSE or HACR BRKR	DISC. SIZE		MCA	MAX FUSE or HACR BRKR	DISC. SIZE		MCA	MAX FUSE or HACR BRKR	DISC. SIZE		MCA	MAX FUSE or HACR BRKR	DISC. SIZE	
					FLA	LRA			FLA	LRA			FLA	LRA			FLA	LRA
90	208/230–3–60	STD	40/40	50/50	41/41	197	44/43	50/50	46/46	201	45/44	50/50	47/47	202	48/48	60/60	51/51	206
		MED	43/42	50/50	45/44	227	46/46	50/50	49/48	231	47/47	60/50	50/49	232	51/50	60/60	55/54	236
		HIGH	48/47	60/50	50/49	262	51/51	60/60	55/54	266	52/52	60/60	56/55	267	56/55	60/60	60/59	271
	460–3–60	STD	19	20	19	97	20	25	21	99	21	25	22	99	23	25	24	101
		MED	20	25	20	113	21	25	22	115	22	25	23	115	24	25	25	117
		HIGH	22	25	23	130	24	30	25	132	24	30	26	132	26	30	28	134
	575–3–60	STD	14	15	14	79	18	20	19	83	16	20	16	81	19	25	21	85
		MED	16	20	16	92	19	25	21	96	17	20	18	94	21	25	23	98
		HIGH	18	20	18	106	22	25	23	110	20	25	20	108	23	25	24	112
102	208/230–3–60	STD	41/41	50/50	43/42	212	45/45	50/50	47/47	216	46/46	50/50	48/48	217	50/49	60/60	52/52	221
		MED	42/42	50/50	44/44	216	46/46	60/50	48/48	220	47/47	60/60	50/49	221	51/51	60/60	54/54	225
		HIGH	46/45	60/50	48/47	266	50/49	60/60	53/52	270	51/50	60/60	54/53	271	55/54	60/60	58/57	275
	460–3–60	STD	19	25	20	111	21	25	22	113	21	25	22	113	23	25	24	115
		MED	20	25	21	114	22	25	23	116	22	25	23	116	24	30	25	118
		HIGH	21	25	22	139	23	25	24	141	23	25	24	141	25	30	26	143
	575–3–60	STD	17	20	17	87	21	25	21	91	18	20	19	89	22	25	23	93
		MED	17	20	18	91	21	25	22	95	19	25	20	93	23	25	24	97
		HIGH	18	20	19	100	22	25	23	104	20	25	21	102	24	30	25	106
120	208/230–3–60	STD	46/46	60/60	48/47	255	50/50	60/60	52/52	259	51/51	60/60	53/53	260	55/54	60/60	58/57	264
		MED	50/49	60/60	52/51	305	54/53	60/60	56/55	309	55/54	60/60	58/56	310	58/57	70/70	62/61	314
		HIGH	53/52	60/60	55/54	316	56/55	60/60	60/59	320	57/56	70/60	61/60	321	61/60	70/70	65/64	325
	460–3–60	STD	23	30	24	122	25	30	26	124	25	30	26	124	27	30	29	126
		MED	24	30	25	147	26	30	27	149	26	30	28	149	28	30	30	151
		HIGH	26	30	27	152	28	30	29	154	28	30	29	154	30	35	32	156
	575–3–60	STD	18	20	19	95	22	25	23	99	20	25	21	97	24	25	25	101
		MED	19	25	20	104	23	25	24	108	21	25	22	106	25	30	26	110
		HIGH	21	25	22	118	25	30	26	122	23	25	24	120	26	30	28	124

See “Legend and Notes for Tables 82 and 83” on page 92.

Specifications subject to change without notice.

ELECTRICAL INFORMATION cont.

Table 83 – UNIT WIRE/FUSE OR HACR BREAKER SIZING DATA WITH 2 SPEED INDOOR FAN MOTOR (cont.)

UNIT	NOM. V–Ph–Hz	IFM TYPE	NO C.O. or UNPWR C.O.								w/ PWRD C.O.							
			NO P.E.				w/ P.E. (pwrd fr/ unit)				NO P.E.				w/ P.E. (pwrd fr/ unit)			
			MCA	MAX FUSE or HACR BRKR	DISC. SIZE		MCA	MAX FUSE or HACR BRKR	DISC. SIZE		MCA	MAX FUSE or HACR BRKR	DISC. SIZE		MCA	MAX FUSE or HACR BRKR	DISC. SIZE	
					FLA	LRA			FLA	LRA			FLA	LRA			FLA	LRA
150 Units built on or prior to 02/15/2015	208/230–3–60	STD	62/61	80/80	65/64	357	66/65	80/80	69/68	361	67/66	80/80	70/69	362	71/70	80/80	75/74	366
		MED	64/63	80/80	67/66	381	68/67	80/80	72/70	385	69/68	80/80	73/72	386	73/72	80/80	77/76	390
		HIGH	67/66	80/80	70/69	392	71/70	80/80	75/74	396	–	–	–	–	–	–	–	–
	460–3–60	STD	30	40	31	180	32	40	33	182	33	40	34	182	34	40	36	184
		MED	31	40	33	192	33	40	35	194	34	40	35	194	35	45	37	196
		HIGH	33	40	34	197	35	40	36	199	35	45	37	199	37	45	39	201
	575–3–60	STD	24	30	25	142	28	30	30	146	26	30	27	144	30	35	32	148
		MED	24	30	25	142	28	30	30	146	26	30	27	144	30	35	32	148
		HIGH	26	30	27	156	30	35	32	160	28	30	29	158	32	35	34	162
150 Units built on or after 02/16/2015	208/230–3–60	STD	63/62	80/80	65/64	370	67/66	80/80	70/69	374	68/67	80/80	71/70	375	71/71	80/80	75/74	379
		MED	65/64	80/80	68/67	394	69/68	80/80	72/71	398	70/69	80/80	73/72	399	74/73	80/80	78/77	403
		HIGH	68/67	80/80	71/70	405	72/71	80/80	75/74	409	–	–	–	–	–	–	–	–
	460–3–60	STD	29	35	30	184	31	40	32	186	31	40	32	186	33	40	34	188
		MED	30	40	31	196	32	40	33	198	32	40	33	198	34	45	35	200
		HIGH	31	40	33	201	33	40	35	203	34	40	35	203	35	40	37	205
	575–3–60	STD	24	30	24	147	27	30	29	151	25	30	26	149	29	35	31	153
		MED	24	30	24	147	27	30	29	151	25	30	26	149	29	35	31	153
		HIGH	25	30	26	161	29	35	31	165	27	30	28	163	31	35	33	167
180	208/230–3–60	STD	70/69	80/80	73/72	393	74/73	80/80	77/76	397	75/74	90/80	78/77	398	78/78	100/100	82/82	402
		MED	72/71	80/80	75/74	417	76/75	100/90	79/78	421	77/76	100/100	81/79	422	81/80	100/100	85/84	426
		HIGH	82	100	86	432	85	100	91	436	86	100	92	437	90	100	96	441
	460–3–60	STD	35	45	36	233	37	45	38	235	37	45	38	235	39	50	40	237
		MED	36	45	37	245	38	50	39	247	38	50	40	247	40	50	42	249
		HIGH	41	50	43	252	43	50	45	254	43	50	46	254	45	50	48	256
	575–3–60	STD	29	35	30	184	32	40	34	188	30	35	32	186	34	40	36	190
		MED	29	35	30	184	32	40	34	188	30	35	32	186	34	40	36	190
		HIGH	33	40	35	196	37	45	39	200	35	40	37	198	39	45	41	202

See “Legend and Notes for Tables 82 and 83” on page 92.

Specifications subject to change without notice.

Legend and Notes for Tables 82 and 83

LEGEND:

BRKR	–	Circuit breaker
CO	–	Convenience outlet
DISC	–	Disconnect
FLA	–	Full load amps
IFM	–	Indoor Fan Motor
LRA	–	Locked rotor amps
MCA	–	Minimum circuit amps
MOCP	–	MAX FUSE or HACR Breaker
PE	–	Power exhaust
PWRD CO	–	Powered convenience outlet
UNPWR CO	–	Unpowered convenience outlet

NOTES:

1. In compliance with NEC requirements for multimotor and combination load equipment (refer to NEC Articles 430 and 440), the overcurrent protective device for the unit shall be fuse or HACR breaker. Canadian units may be fuse or circuit breaker.
2. **Unbalanced 3-Phase Supply Voltage**
   Never operate a motor where a phase imbalance in supply voltage is greater than 2%. Use the following formula to determine the percentage of voltage imbalance.

$$\text{\% Voltage Imbalance} = 100 \times \frac{\text{max voltage deviation from average voltage}}{\text{average voltage}}$$

Example: Supply voltage is 230-3-60

AB = 224 v
BC = 231 v
AC = 226 v

$$\text{Average Voltage} = \frac{(224 + 231 + 226)}{3} = \frac{681}{3}$$

$$= 227$$

Determine maximum deviation from average voltage.

(AB) 227 – 224 = 3 v
(BC) 231 – 227 = 4 v
(AC) 227 – 226 = 1 v
Maximum deviation is 4 v.
Determine percent of voltage imbalance.

$$\text{\% Voltage Imbalance} = 100 \times \frac{4}{227}$$

$$= 1.76\%$$

This amount of phase imbalance is satisfactory as it is below the maximum allowable 2%.

IMPORTANT: If the supply voltage phase imbalance is more than 2%, contact your local electric utility company immediately.

SEQUENCE OF OPERATION

General

The sequence below describes the sequence of operation for an electromechanical unit with and without a factory installed EconoMi$er IV and X (called “economizer” in this sequence). For information regarding a direct digital controller, see the start−up, operations, and troubleshooting manual for the applicable controller.

Electromechanical units with no economizer

Cooling (Single speed indoor fan motor) —

When the thermostat calls for cooling, terminals G and Y1 are energized. As a result, the indoor fan contactor (IFC) and the compressor contactor (C1) are energized, causing the indoor fan motor (IFM), compressor #1, and outdoor fan to start. If the unit has 2 stages of cooling, the thermostat will additionally energize Y2. The Y2 signal will energize compressor contactor #2 (C2), causing compressor #2 to start. Regardless of the number of stages, the outdoor fan motor runs continuously while unit is cooling. When 2−speed indoor fan motor system is utilized, indoor fan motor runs at design CFM (full speed) during the heating operation.

Cooling (2−speed indoor fan motor) —

Per ASHRAE 90.1 standard section 6.4.3.10.b, during the first stage of cooling operation the VFD will adjust the fan motor to provide 2/3rd of the total cfm established for the unit. When a call for the second stage of cooling is required, the VFD will allow the total cfm for the unit established (100%).

Heating (Single or 2−speed indoor fan motor) —

NOTE: RGS units have either 1 or 2 stages of gas heat. When 2−speed indoor fan motor system is utilized, indoor fan motor runs at design cfm (full speed) during the heating operation.

When the thermostat calls for heating, power is sent to W on the Integrated Gas Controller (IGC) board. An LED (light−emitting diode) on the IGC board turns on and remains on during normal operation. A check is made to ensure that the rollout switch and limit switch are closed. If the check was successful, the induced−draft motor is energized, and when its speed is satisfactory, as proven by the “hall effect” sensor, the ignition activation period begins. The burners will ignite within 5 seconds. If the burners do not light, there is a 22−second delay before another 5−second attempt. This sequence is repeated for 15 minutes or until the burners light. If, after the 15 minutes, the burners still have not lit, heating is locked out. To reset the control, break 24−v power to the thermostat.

When ignition occurs, the IGC board will continue to monitor the condition of the rollout switch, the limit switches, the “hall effect” sensor, as well as the flame sensor. 45 seconds after ignition occurs, assuming the unit is controlled through a room thermostat set for fan auto, the indoor fan motor will energize (and the outdoor air dampers will open to their minimum position). If, for some reason, the over−temperature limit opens prior to the start of the indoor fan blower, the unit will shorten the 45−second delay to 5 seconds less than the time from initiation of heat to when the limit tripped. Gas will not be interrupted to the burners and heating will continue. Once the fan−on delay has been modified, it will not change back to 45 seconds until power is reset to the control.

On units with 2 stages of heat, when additional heat is required, W2 closes and initiates power to the second stage of the main gas valve. When the thermostat is satisfied, W1 and W2 open and the gas valve closes, interrupting the flow of gas to the main burners.

If the call for W1 lasted less than 1 minute, the heating cycle will not terminate until 1 minute after W1 became active. If the unit is controlled through a room thermostat set for fan auto, the indoor fan motor will continue to operate for an additional 45 seconds then stop. If the over−temperature limit opens after the indoor motor is stopped, but within 10 minutes of W1 becoming inactive, on the next cycle the time will be extended by 15 seconds. The maximum delay is 3 minutes. Once modified, the fan off delay will not change back to 45 seconds unless power is reset to the control. A LED indicator is provided on the IGC to monitor operation.

Electromechanical units with an economizer

Cooling —

When free cooling is not available, the compressors will be controlled by the zone thermostat. When free cooling is available, the outdoor air damper is modulated by the EconoMi$er IV and X control to provide a 50°F (10°C) to 55°F (13°C) mixed air temperature into the zone. As the mixed air temperature fluctuates above 55°F (13°C)or below 50°F (10°C) dampers will be modulated (open or close) to bring the mixed air temperature back within control. If mechanical cooling is utilized with free cooling, the outdoor air damper will maintain its current position at the time the compressor is started. If the increase in cooling capacity causes the mixed air temperature to drop below 45°F (7°C), then the outdoor air damper position will be decreased to the minimum position. If the mixed air temperature continues to fall, the outdoor air damper will close. Control returns to normal once the mixed air temperature rises above 48°F (9°C). The power exhaust fans will be energized and de−energized, if installed, as the outdoor air damper opens and closes.

If field installed accessory CO_2 sensors are connected to the EconoMi$er IV and X control, a demand controlled ventilation strategy will begin to operate. As the CO_2 level in the zone increases above the CO_2 setpoint, the minimum position of the damper will be increased proportionally. As the CO_2 level decreases because of the increase in fresh air, the outdoor air damper will be proportionally closed. For EconoMi$er IV and X operation, there must be a thermostat call for the fan (G).

If the unit is occupied and the fan is on, the damper will operate at minimum position. Otherwise, the damper will be closed.

If field installed accessory CO_2 sensors are connected to the EconoMi$er IV and X control, a demand controlled ventilation strategy will begin to operate. As the CO_2 level in the zone increases above the CO_2 setpoint, the minimum position of the damper will be increased proportionally. As the CO_2 level decreases because of the increase in fresh air, the outdoor air damper will be proportionally closed. For EconoMi$er IV and X operation, there must be a thermostat call for the fan (G). If the unit is occupied and the fan is on, the damper will operate at minimum position. Otherwise, the damper will be closed.

When the EconoMi$er IV and X control is in the occupied mode and a call for cooling exists (Y1 on the thermostat), the control will first check for indoor fan operation. If the fan is not on, then cooling will not be activated. If the fan is on, then the control will open the EconoMi$er IV and X damper to the minimum position.

On the initial power to the EconoMi$er IV and X control, it will take the damper up to 2 1/2 minutes before it begins to position itself. After the initial power−up, further changes in damper position can take up to 30 seconds to initiate. Damper movement from full closed to full open (or vice versa) will take between 1 1/2 and 2 1/2 minutes. If free cooling can be used as determined from the appropriate changeover command (switch, dry bulb, enthalpy curve, differential dry bulb, or differential enthalpy), then the control will modulate the dampers open to maintain the mixed air temperature setpoint at 50°F (10°C) to 55°F (13°C). If there is a further demand for cooling (cooling second stage − Y2 is energized), then the control will bring on compressor stage 1 to maintain the mixed air temperature setpoint. The EconoMi$er IV and X damper will be open at maximum position.

2−Speed Note: When operating in ventilation mode only, the indoor fan motor will automatically adjust to 2/3rd of the total cfm established.

Heating

The sequence of operation for the heating is the same as an electromechanical unit with no economizer. The only difference is how the economizer acts. The economizer will stay at the Economizer Minimum Position while the evaporator fan is operating. The outdoor air damper is closed when the indoor fan is not operating.

Optional Hot Gas Re−Heat Dehumidification System

NOTE: Hot Gas Re−Heat is no longer available for RGS size 36−60 models. When Hot Gas Re−Heat is required for 3 to 5 ton models use the equivalent RGH or RGX models.

Units with the factory equipped Hot Gas Re−Heat option are capable of providing multiple modes of improved dehumidification as a variation of the normal cooling cycle. The Hot Gas Re−Heat option includes additional valves in the liquid line and discharge line of each refrigerant circuit, a small reheat condenser coil downstream of the evaporator, and Motormaster variable−speed control of some or all outdoor fans. Operation of the revised refrigerant circuit for each mode is described below.

The Hot Gas Re−Heat system provides three sub−modes of operation: Cool, Reheat1, and Reheat2.

Cool mode − provides a normal ratio of Sensible and Latent Cooling effect from the evaporator coil.

Reheat1 − provides increased Latent Cooling while slightly reducing the Sensible Cooling effect.

Reheat2 − provides normal Latent Cooling but with null or minimum Sensible Cooling effect delivered to the space.

The Reheat1 and Reheat2 modes are available when the unit is not in a Heating mode and when the Low Ambient Lockout switch is closed.

The following diagrams depict piping for Single Stage cooling units.

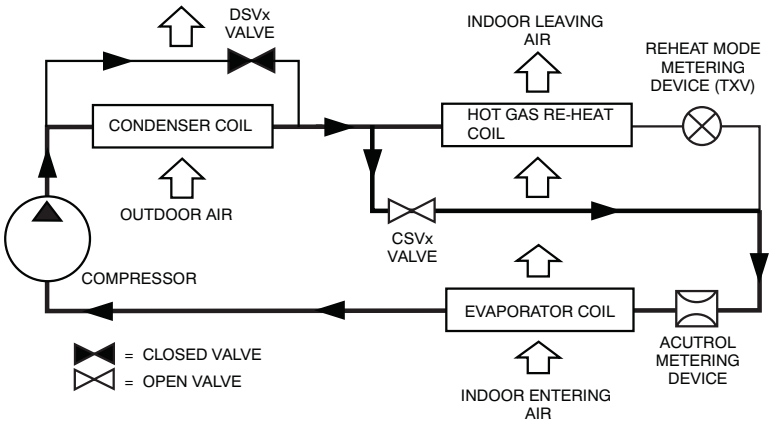

C12647B

Normal Cooling Mode – Hot Gas Re–Heat System with Single Stage Cooling

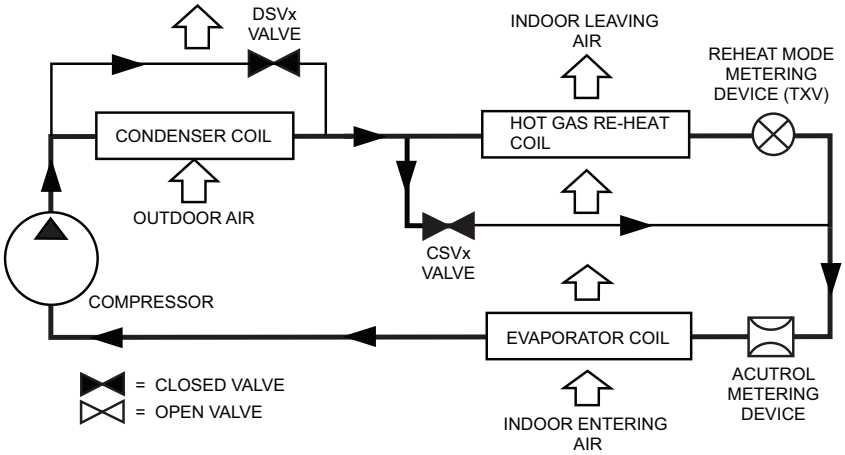

C12648B

Subcooling Mode (Reheat 1) – Hot Gas Re–Heat System with Single Stage Cooling

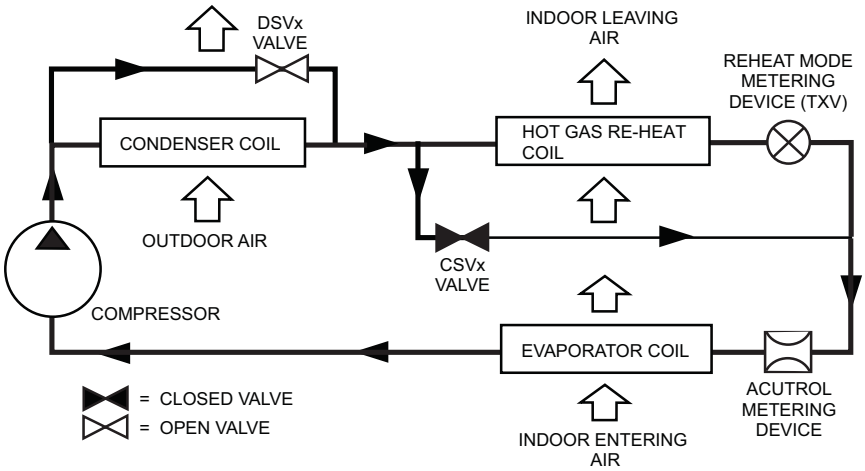

C12649B

Hot Gas Reheat Mode (Reheat 2) – Hot Gas Re–Heat System with Single Stage Cooling

Specifications subject to change without notice.

Gas Heat/Electric Cooling Packaged Rooftop

HVAC Guide Specifications

Size Range: **3 to 15 Nominal Tons**

Section **Description**

23 06 80 Schedules for Decentralized HVAC Equipment

23 06 80.13 Decentralized Unitary HVAC Equipment Schedule

23 06 80.13.A. Rooftop unit schedule

1. Schedule is per the project specification requirements.

23 07 16 HVAC Equipment Insulation

23 07 16.13 Decentralized, Rooftop Units:

23 07 16.13.A. Evaporator fan compartment:

1. Interior cabinet surfaces shall be insulated with a minimum 1/2–in. thick, minimum 1 1/2 lb density, flexible fiberglass insulation bonded with a phenolic binder, neoprene coated on the air side.
2. Insulation and adhesive shall meet NFPA 90A requirements for flame spread and smoke generation.

23 07 16.13.B. Gas heat compartment:

1. Aluminum foil–faced fiberglass insulation shall be used.
2. Insulation and adhesive shall meet NFPA 90A requirements for flame spread and smoke generation.

23 09 13 Instrumentation and Control Devices for HVAC

23 09 13.23 Sensors and Transmitters

23 09 13.23.A. Thermostats

1. Thermostat must
   a. energize both “W” and “G” when calling for heat.
   b. have capability to energize 2 different stages of cooling, and 2 different stages of heating.
   c. include capability for occupancy scheduling.

23 09 33 Electric and Electronic Control System for HVAC

23 09 33.13 Decentralized, Rooftop Units:

23 09 33.13.A. General:

1. Shall be complete with self–contained low–voltage control circuit protected by a resettable circuit breaker on the 24–v transformer side. Transformer shall have 75VA capability.
2. Shall utilize color–coded wiring.
3. Shall include a central control terminal board to conveniently and safely provide connection points for vital control functions such as: smoke detectors, phase monitor, gas controller, economizer, thermostat, DDC control options, and low and high pressure switches.
4. The heat exchanger shall be controlled by an integrated gas controller (IGC) microprocessor. See heat exchanger section of this specification.
5. Unit shall include a minimum of one 8–pin screw terminal connection board for connection of control wiring.

23 09 33.23.B. Safeties:

1. Compressor over–temperature, over–current. High internal pressure differential.
2. Low pressure switch.
   a. Units with 2 compressors shall have different sized connectors for the circuit 1 and circuit 2 low and high pressure switches. They shall physically prevent the cross–wiring of the safety switches between circuits 1 and 2.
   b. Low pressure switch shall use different color wire than the high pressure switch. The purpose is to assist the installer and service technician to correctly wire and or troubleshoot the rooftop unit.
3. High pressure switch.
   a. Units with 2 compressors shall have different sized connectors for the circuit 1 and circuit 2 low and high pressure switches. They shall physically prevent the cross–wiring of the safety switches between circuits 1 and 2.

b. High pressure switch shall use different color wire than the low pressure switch. The purpose is to assist the installer and service technician to correctly wire and or troubleshoot the rooftop unit.

4. Automatic reset, motor thermal overload protector.
5. Heating section shall be provided with the following minimum protections:
   a. High temperature limit switches.
   b. Induced draft motor speed sensor.
   c. Flame rollout switch.
   d. Flame proving controls.

23 09 93 Sequence of Operations for HVAC Controls

23 09 93.13 Decentralized, Rooftop Units:

23 09 93.13 INSERT SEQUENCE OF OPERATION

23 40 13 Panel Air Filters

23 40 13.13 Decentralized, Rooftop Units:

23 40 13.13.A. Standard filter section

1. Shall consist of factory installed, low velocity, disposable 2−in. thick fiberglass filters of commercially available sizes.
2. Unit shall use only one filter size. Multiple sizes are not acceptable.
3. Filters shall be accessible through an access panel with “no−tool” removal as described in the unit cabinet section of this specification (23 81 19.13.G).

23 81 19 Self−Contained Air Conditioners

23 81 19.13 Small−Capacity Self−Contained Air Conditioners (RGS036−180)

23 81 19.13.A. General

1. Outdoor, rooftop mounted, electrically controlled, heating and cooling unit utilizing a fully hermetic scroll compressor(s) for cooling duty and gas combustion for heating duty.
2. Factory assembled, single−piece heating and cooling rooftop unit. Contained within the unit enclosure shall be all factory wiring, piping, controls, and special features required prior to field start−up.
3. Unit shall use R−410A refrigerant.
4. Unit shall be installed in accordance with the manufacturer’s instructions.
5. Unit must be selected and installed in compliance with local, state, and federal codes.

23 81 19.13.B. Quality Assurance

1. Unit meets ASHRAE 90.1 minimum efficiency requirements.
2. Unit shall be rated in accordance with AHRI Standards 210/240 and 340/360.
3. Unit shall be designed to conform to ASHRAE 15.
4. Unit shall be UL−tested and certified in accordance with ANSI Z21.47 Standards and UL−listed and certified under Canadian standards as a total package for safety requirements.
5. Insulation and adhesive shall meet NFPA 90A requirements for flame spread and smoke generation.
6. Unit casing shall be capable of withstanding 500−hour salt spray exposure per ASTM B117 (scribed specimen).
7. Unit shall be designed in accordance with ISO 9001, and shall be manufactured in a facility registered by ISO 9001.
8. Roof curb shall be designed to conform to NRCA Standards.
9. Unit shall be subjected to a completely automated run test on the assembly line. The data for each unit will be stored at the factory, and must be available upon request.
10. Unit shall be designed in accordance with UL Standard 1995, including tested to withstand rain.
11. Unit shall be constructed to prevent intrusion of snow and tested to prevent snow intrusion into the control box up to 40 mph.
12. Unit shake tested to assurance level 1, ASTM D4169 to ensure shipping reliability.
13. High Efficient Motors listed shall meet section 313 of the Energy Independence and Security Act of 2007 (EISA 2007)

23 81 19.13.C. Delivery, Storage, and Handling

1. Unit shall be stored and handled per manufacturer’s recommendations.
2. Lifted by crane requires either shipping top panel or spreader bars.
3. Unit shall only be stored or positioned in the upright position.

23 81 19.13.D. Project Conditions

1. As specified in the contract.

23 81 19.13.E. Operating Characteristics

1. Unit shall be capable of starting and running at 115°F (46°C) ambient outdoor temperature, meeting maximum load criteria of AHRI Standard 210/240 or 340/360 at ± 10% voltage.
2. Compressor with standard controls shall be capable of operation down to 40°F (4°C), ambient outdoor temperatures. Accessory winter start kit is necessary if mechanically cooling at ambient temperatures down to 25°F (–4°C).
3. Unit shall discharge supply air vertically or horizontally as shown on contract drawings.
4. Unit shall be factory configured for vertical supply & return configurations.
5. Unit shall be field convertible from vertical to horizontal airflow on all models. No special kit required on 036–150 models. Supply duct kit required for 180 size model only.
6. Unit shall be capable of mixed operation: vertical supply with horizontal return or horizontal supply with vertical return.

23 81 19.13.F. Electrical Requirements

1. Main power supply voltage, phase, and frequency must match those required by the manufacturer.

23 81 19.13.G. Unit Cabinet

1. Unit cabinet shall be constructed of galvanized steel, and shall be bonderized and coated with a pre-painted baked enamel finish on all externally exposed surfaces.
2. Unit cabinet exterior paint shall be: film thickness, (dry) 0.003 inches minimum, gloss (per ASTM D523, 60°F / 16°C): 60, Hardness: H–2H Pencil hardness.
3. Evaporator fan compartment interior cabinet insulation shall conform to AHRI Standards 210/240 or 340/360 minimum exterior sweat criteria. Interior surfaces shall be insulated with a minimum 1/2–in. thick, 1 lb density, flexible fiberglass insulation, neoprene coated on the air side. Aluminum foil–faced fiberglass insulation shall be used in the gas heat compartment.
4. Base of unit shall have a minimum of four locations for thru–the–base gas and electrical connections (factory installed or field installed), standard.
5. Base Rail
   a. Unit shall have base rails on a minimum of 2 sides.
   b. Holes shall be provided in the base rails for rigging shackles to facilitate maneuvering and overhead rigging.
   c. Holes shall be provided in the base rail for moving the rooftop by fork truck.
   d. Base rail shall be a minimum of 16 gauge thickness.
6. Condensate pan and connections:
   a. Shall be a sloped condensate drain pan made of a non–corrosive material.
   b. Shall comply with ASHRAE Standard 62.
   c. Shall use a 3/4” –14 NPT drain connection, possible either through the bottom or side of the drain pan. Connection shall be made per manufacturer’s recommendations.
7. Top panel:
   a. Shall be a single piece top panel on 036–121 sizes, two piece on 150 and 180 sizes.
8. Gas Connections:
   a. All gas piping connecting to unit gas valve shall enter the unit cabinet at a single location on side of unit (horizontal plane).
   b. Thru–the–base capability
      (1.) Standard unit shall have a thru–the–base gas–line location using a raised, embossed portion of the unit basepan.
      (2.) Optional, factory approved, water–tight connection method must be used for thru–the–base gas connections.
      (3.) No basepan penetration, other than those authorized by the manufacturer, is permitted.
9. Electrical Connections
   a. All unit power wiring shall enter unit cabinet at a single, factory prepared, knockout location.
   b. Thru–the–base capability.
      (1.) Standard unit shall have a thru–the–base electrical location(s) using a raised, embossed portion of the unit basepan.
      (2.) Optional, factory approved, water–tight connection method must be used for thru–the–base electrical connections.
      (3.) No basepan penetration, other than those authorized by the manufacturer, is permitted.

10. Component access panels (standard)
    a. Cabinet panels shall be easily removable for servicing.
    b. Unit shall have one factory installed, tool−less, removable, filter access panel.
    c. Panels covering control box, indoor fan, indoor fan motor, gas components (where applicable), and compressors shall have molded composite handles.
    d. Handles shall be UV modified, composite. They shall be permanently attached, and recessed into the panel.
    e. Screws on the vertical portion of all removable access panel shall engage into heat resistant, molded composite collars.
    f. Collars shall be removable and easily replaceable using manufacturer recommended parts.

23 81 19.13.H. Gas Heat

1. General
    a. Heat exchanger shall be an induced draft design. Positive pressure heat exchanger designs shall not be allowed.
    b. Shall incorporate a direct−spark ignition system and redundant main gas valve.
    c. Gas supply pressure at the inlet to the rooftop unit gas valve must match that required by the manufacturer.
2. The heat exchanger shall be controlled by an integrated gas controller (IGC) microprocessor.
    a. IGC board shall notify users of fault using an LED (light−emitting diode).
    b. IGC board shall contain algorithms that modify evaporator fan operation to prevent future cycling on high temperature limit switch.
    c. Unit shall be equipped with anti−cycle protection with one short cycle on unit flame rollout switch or 4 continuous short cycles on the high temperature limit switch. Fault indication shall be made using an LED.
3. Standard Heat Exchanger construction
    a. Heat exchanger shall be of the tubular−section type constructed of a minimum of 20−gauge steel coated with a nominal 1.2 mil aluminum−silicone alloy for corrosion resistance.
    b. Burners shall be of the in−shot type constructed of aluminum−coated steel.
    c. Burners shall incorporate orifices for rated heat output up to 2000 ft (610m) elevation. Additional accessory kits may be required for applications above 2000 ft (610m) elevation, depending on local gas supply conditions.
    d. Each heat exchanger tube shall contain multiple dimples for increased heating effectiveness.
4. Optional Stainless Steel Heat Exchanger construction
    a. Use energy saving, direct−spark ignition system.
    b. Use a redundant main gas valve.
    c. Burners shall be of the in−shot type constructed of aluminum−coated steel.
    d. All gas piping shall enter the unit cabinet at a single location on side of unit (horizontal plane).
    e. The optional stainless steel heat exchanger shall be of the tubular−section type, constructed of a minimum of 20−gauge type 409 stainless steel.
    f. Type 409 stainless steel shall be used in heat exchanger tubes and vestibule plate.
    g. Complete stainless steel heat exchanger allows for greater application flexibility.
5. Optional Low NO_x Heat Exchanger construction
    a. Low NO_x reduction shall be provided to reduce nitrous oxide emissions to meet California's Air Quality Management District (SCAQMD) low−NO_x emissions requirement of 40 nanograms per joule or less.
    b. Primary tubes and vestibule plates on low NO_x units shall be 409 stainless steel. Other components shall be aluminized steel.
6. Induced draft combustion motor and blower
    a. Shall be a direct−drive, single inlet, forward−curved centrifugal type.
    b. Shall be made from steel with a corrosion−resistant finish.
    c. Shall have permanently lubricated sealed bearings.
    d. Shall have inherent thermal overload protection.
    e. Shall have an automatic reset feature.

23 81 19.13.I. Coils

1. Standard Aluminum Fin – Copper Tube Coils:
   a. Standard evaporator and condenser coils shall have aluminum lanced plate fins mechanically bonded to seamless internally grooved copper tubes with all joints brazed.
   b. Evaporator coils shall be leak tested to 150 psig, pressure tested to 450 psig, and qualified to UL 1995 burst test at 1775 psig.
   c. Condenser coils shall be leak tested to 150 psig, pressure tested to 650 psig, and qualified to UL 1995 burst test at 1980 psig.
2. Optional Pre–coated aluminum–fin condenser coils (3 Phase Models Only):
   a. Shall have a durable epoxy–phenolic coating to provide protection in mildly corrosive coastal environments.
   b. Coating shall be applied to the aluminum fin stock prior to the fin stamping process to create an inert barrier between the aluminum fin and copper tube.
   c. Epoxy–phenolic barrier shall minimize galvanic action between dissimilar metals.
3. Optional Copper–fin evaporator and condenser coils (3 Phase Models Only):
   a. Shall be constructed of copper fins mechanically bonded to copper tubes and copper tube sheets.
   b. Galvanized steel tube sheets shall not be acceptable.
   c. A polymer strip shall prevent coil assembly from contacting the sheet metal coil pan to minimize potential for galvanic corrosion between coil and pan.
4. Optional E–coated aluminum–fin evaporator and condenser coils (3 Phase Models Only):
   a. Shall have a flexible epoxy polymer coating uniformly applied to all coil surface areas without material bridging between fins.
   b. Coating process shall ensure complete coil encapsulation of tubes, fins and headers.
   c. Color shall be high gloss black with gloss per ASTM D523–89.
   d. Uniform dry film thickness from 0.8 to 1.2 mil on all surface areas including fin edges.
   e. Superior hardness characteristics of 2H per ASTM D3363–92A and cross–hatch adhesion of 4B–5B per ASTM D3359–93.
   f. Impact resistance shall be up to 160 in.–lb (ASTM D2794–93).
   g. Humidity and water immersion resistance shall be up to minimum 1000 and 250 hours respectively (ASTM D2247–92 and ASTM D870–92).
   h. Corrosion durability shall be confirmed through testing to be no less than 1000 hours salt spray per ASTM B117–90.
5. Optional E–coated aluminum–fin, aluminum tube condenser coils:
   a. Shall have a flexible epoxy polymer coating uniformly applied to all coil external surface areas without material bridging between fins or louvers.
   b. Coating process shall ensure complete coil encapsulation, including all exposed fin edges.
   c. E–coat thickness of 0.8 to 1.2 mil with top coat having a uniform dry film thickness from 1.0 to 2.0 mil on all external coil surface areas, including fin edges, shall be provided.
   d. Shall have superior hardness characteristics of 2H per ASTM D3363–00 and cross–hatch adhesion of 4B–5B per ASTM D3359–02.
   e. Shall have superior impact resistance with no cracking, chipping or peeling per NSF/ANSI 51–2002 Method 10.2.

23 81 19.13.J. Refrigerant Components

1. Refrigerant circuit shall include the following control, safety, and maintenance features:
   a. Fixed orifice metering system shall prevent mal–distribution of two–phase refrigerant by including multiple fixed orifice devices in each refrigeration circuit. Each orifice is to be optimized to the coil circuit it serves.
   b. Refrigerant filter drier – Solid core design.
   c. Service gauge connections on suction and discharge lines.
   d. Pressure gauge access through a specially designed access port in the top panel of the unit.
2. There shall be gauge line access port in the skin of the rooftop, covered by a black, removable plug.
   a. The plug shall be easy to remove and replace.
   b. When the plug is removed, the gauge access port shall enable maintenance personnel to route their pressure gauge lines.
   c. This gauge access port shall facilitate correct and accurate condenser pressure readings by enabling the reading with the compressor access panel on.

d. The plug shall be made of a leak proof, UV−resistant, composite material.

3. Compressors
   a. Unit shall use fully hermetic, scroll compressor for each independent refrigeration circuit.
   b. Compressor motors shall be cooled by refrigerant gas passing through motor windings.
   c. Compressors shall be internally protected from high discharge temperature conditions.
   d. Compressors shall be protected from an over−temperature and over−amperage conditions by an internal, motor overload device.
   e. Compressor shall be factory mounted on rubber grommets.
   f. Compressor motors shall have internal line break thermal, current overload and high pressure differential protection.
   g. Crankcase heaters shall not be required for normal operating range, unless required by compressor manufacturer due to refrigerant charge limits.

23 81 19.13.K. Filter Section

1. Filters access is specified in the unit cabinet section of this specification.
2. Filters shall be held in place by a pivoting filter tray, facilitating easy removal and installation.
3. Shall consist of factory installed, low velocity, throw−away 2−in. thick fiberglass filters.
4. Filters shall be standard, commercially available sizes.
5. Only one size filter per unit is allowed.

23 81 19.13.L. Evaporator Fan and Motor

1. Evaporator fan motor:
   a. Shall have permanently lubricated bearings.
   b. Shall have inherent automatic−reset thermal overload protection or circuit breaker.
   c. Shall have a maximum continuous bhp rating for continuous duty operation; no safety factors above that rating shall be required.
2. Electric Drive (Direct Drive) X13 − 5 Speed/Torque Evaporator Fan:
   a. Multi−speed motor with easy quick adjustment settings.
   b. Blower fan shall be double−inlet type with forward−curved blades.
   c. Shall be constructed from steel with a corrosion resistant finish and dynamically balanced.
   d. Standard on all 036−060 3−phase models, with optional belt drive.
3. Belt−driven Evaporator Fan:
   a. Belt drive shall include an adjustable pitch motor pulley.
   b. Shall use sealed, permanently lubricated ball−bearing type.
   c. Blower fan shall be double−inlet type with forward−curved blades.
   d. Shall be constructed from steel with a corrosion resistant finish and dynamically balanced.

23 81 19.13.M. Condenser Fans and Motors

1. Condenser fan motors:
   a. Shall be a totally enclosed motor.
   b. Shall use permanently lubricated bearings.
   c. Shall have inherent thermal overload protection with an automatic reset feature.
   d. Shall use a shaft−down design on 036−121 and 180 models and shaft−up on 150 size with rain shield.
2. Condenser Fans:
   a. Shall be a direct−driven propeller type fan.
   b. Shall have galvalum blades riveted to corrosion−resistant steel spiders and shall be dynamically balanced.

23 81 19.13.N. Special Features Options and Accessories

1. 2−speed indoor fan motor for 2−stage cooling models only:
   a. Evaporator fan motor:
      (1.) Shall have permanently lubricated bearings.
      (2.) Shall have a maximum continuous bhp rating for continuous duty operation; no safety factors above that rating.
      (3.) Shall be Variable Frequency duty and 2−speed control.
      (4.) Shall contain motor shaft grounding ring to prevent electrical bearing fluting damage by safely diverting harmful shaft voltages and bearing currents to ground.

2. Variable Frequency Drive (VFD). Only available on 2−speed indoor fan motor option:
   a. Shall be installed inside the unit cabinet, mounted, wired and tested.
   b. Shall contain Electromagnetic Interference (EMI) frequency protection.
   c. Insulated Gate Bi−Polar Transistors (IGBT) used to produce the output pulse width modulated (PWM) waveform, allowing for quiet motor operation.
   d. Self diagnostics with fault and power code LED indicator. Field accessory Display Kit available for further diagnostics and special setup applications.
   e. RS485 capability standard.
   f. Electronic thermal overload protection.
   g. 5% swinging chokes for harmonic reduction and improved power factor.
   h. All printed circuit boards shall be conformal coated.
3. Integrated EconoMi$er IV, EconoMi$er2, and EconoMi$er X standard leak rate models. (Factory installed on 3 phase models only. Field installed on all 3 and 1 phase models)
   a. Integrated, gear driven opposing modulating blade design type capable of simultaneous economizer and compressor operation.
   b. Independent modules for vertical or horizontal return configuration shall be available. Vertical return modules shall be available as a factory installed option.
   c. Damper blades shall be galvanized steel with composite gears. Plastic or composite blades on intake or return shall not be acceptable.
   d. Shall include all hardware and controls to provide free cooling with outdoor air when temperature and/or humidity are below setpoints.
   e. Shall be equipped with gear driven dampers for both the outdoor ventilation air and the return air for positive air stream control.
   f. Standard leak rate shall be equipped with dampers not to exceed 2% leakage at 1 in. wg pressure differential.
   g. Economizer controller on EconoMi$er IV models shall be Honeywell W7212 that provides:
      (1.) Combined minimum and DCV maximum damper position potentiometers with compressor staging relay.
      (2.) Functions with solid state analog enthalpy or dry bulb changeover control sensing.
      (3.) Contain LED indicates for:
      when free cooling is available, when module is in DCV mode, when exhaust fan contact is closed.
   h. Economizer controller on EconoMi$er X models shall be the Honeywell W7220 that provides:
      (1.) 2−line LCD interface screen for setup, configuration and troubleshooting.
      (2.) On−board Fault Detection and Diagnostics (FDD) that senses and alerts when the economizer is not operating properly, per California Title 24.
      (3.) Sensor failure loss of communication identification
      (4.) Automatic sensor detection
      (5.) Capabilities for use with multiple−speed indoor fan systems
      (6.) Utilize digital sensors: Dry bulb and Enthalpy
   i. Shall be capable of introducing up to 100% outdoor air.
   j. Shall be equipped with a barometric relief damper capable of relieving up to 100% return air and contain seals that meet ASHRAE 90.1 requirements.
   k. Shall be designed to close damper(s) during loss−of−power situations with spring return built into motor.
   l. Dry bulb outdoor air temperature sensor shall be provided as standard. Enthalpy sensor is also available on factory installed only. Outdoor air sensor setpoint shall be adjustable and shall range from 40 to 100F /4 to 38C. Additional sensor options shall be available as accessories.
   m. The economizer controller shall also provide control of an accessory power exhaust unit function. Factory set at 100%, with a range of 0% to 100%.
   n. The economizer shall maintain minimum airflow into the building during occupied period and provide design ventilation rate for full occupancy.
   o. Dampers shall be completely closed when the unit is in the unoccupied mode.
   p. Economizer controller shall accept a 2−10 Vdc CO2 sensor input for IAQ/DCV control. In this mode, dampers shall modulate the outdoor air damper to provide ventilation based on the sensor input.

q. Compressor lockout temperature on W7220 is adjustable from −45F to 80F, set at a factory default of 32F. Others shall open at 35F (2C) and closes at 50F (10C).
r. Actuator shall be direct coupled to economizer gear. No linkage arms or control rods shall be acceptable.
s. Economizer controller shall provide indications when in free cooling mode, in the DCV mode, or the exhaust fan contact is closed.

4. Integrated EconoMi$er2, and EconoMi$er X Ultra Low Leak rate models.(Factory installed on 3 phase models only. Field installed on all 3 and 1 phase models)
   a. Integrated, gear driven opposing modulating blade design type capable of simultaneous economizer and compressor operation.
   b. Independent modules for vertical or horizontal return configuration shall be available. Vertical return modules shall be available as a factory installed option.
   c. Damper blades shall be galvanized steel with composite gears. Plastic or composite blades on intake or return shall not be acceptable.
   d. Shall include all hardware and controls to provide free cooling with outdoor air when temperature and/or humidity are below setpoints.
   e. Shall be equipped with gear driven dampers for both the outdoor ventilation air and the return air for positive air stream control
   f. Ultra Low Leak design meets California Title 24 section 140.4 and ASHRAE90.1 requirements for 4 cfm per sq.ft. on the outside air dampers and 10 cfm per sq. ft. on the return dampers.
   g. Economizer controller on EconoMi$er X models shall be the Honeywell W7220 that provides:
      (1.) 2−line LCD interface screen for setup, configuration and troubleshooting
      (2.) On−board Fault Detection and Diagnostics (FDD) that senses and alerts when the economizer is not operating properly, per California Title 24.
      (3.) Sensor failure loss of communication identification
      (4.) Automatic sensor detection
      (5.) Capabilities for use with multiple−speed indoor fan systems
      (6.) Utilize digital sensors: Dry bulb and Enthalpy
   h. Shall be capable of introducing up to 100% outdoor air.
   i. Shall be equipped with a barometric relief damper capable of relieving up to 100% return air and contain seals that meet ASHRAE 90.1 requirements.
   j. Shall be designed to close damper(s) during loss−of−power situations with spring return built into motor.
   k. Dry bulb outdoor air temperature sensor shall be provided as standard. Enthalpy sensor is also available on factory installed only. Outdoor air sensor setpoint shall be adjustable and shall range from 40 to 100° F / 4 to 38° C. Additional sensor options shall be available as accessories.
   l. The economizer controller shall also provide control of an accessory power exhaust unit function. Factory set at 100%, with a range of 0% to 100%.
   m. The economizer shall maintain minimum airflow into the building during occupied period and provide design ventilation rate for full occupancy.
   n. Dampers shall be completely closed when the unit is in the unoccupied mode.
   o. Economizer controller shall accept a 2−10 Vdc CO_2 sensor input for IAQ/DCV control. In this mode, dampers shall modulate the outdoor air damper to provide ventilation based on the sensor input.
   p. Compressor lockout temperature on W7220 is adjustable from −45° F to 80° F, set at a factory default of 32° F. Others shall open at 35°F (2°C) and closes at 50°F (10°C).
   q. Actuator shall be direct coupled to economizer gear. No linkage arms or control rods shall be acceptable.
   r. Economizer controller shall provide indications when in free cooling mode, in the DCV mode, or the exhaust fan contact is closed.
5. Two−Position Damper (Factory installed on 3 Phase Models Only. Field installed on all 3 and 1 Phase Models)
   a. Damper shall be a Two−Position Damper. Damper travel shall be from the full closed position to the field adjustable %−open setpoint.
   b. Damper shall include adjustable damper travel from 25% to 100% (full open).
   c. Damper shall include single or dual blade, gear driven dampers and actuator motor.
   d. Actuator shall be direct coupled to damper gear. No linkage arms or control rods shall be acceptable.

e. Damper will admit up to 100% outdoor air for applicable rooftop units.
f. Damper shall close upon indoor (evaporator) fan shutoff and/or loss of power.
g. The damper actuator shall plug into the rooftop unit's wiring harness plug. No hard wiring shall be required.
h. Outside air hood shall include aluminum water entrainment filter.
i. Not available with 2−speed indoor fan motor models.

6. Manual damper
   a. Manual damper package shall consist of damper, air inlet screen, and rain hood which can be pre-set to admit up to 25 or 50% outdoor air for year round ventilation.
   b. Not available with 2−speed indoor fan motor models.
7. Hot Gas Re−Heat Adaptive Dehumidification System (3 Phase Models Only):
   a. The Hot Gas Re−Heat Dehumidification System shall be factory installed in single stage RGS036−072 and 2−stage RGS090−180 models with RTPF (round tube plate fin) condenser coils, and shall provide greater dehumidification of the occupied space by two modes of dehumidification operations in addition to its normal design cooling mode:
      (1.) Subcooling mode further sub cools the hot liquid refrigerant leaving the condenser coil when both temperature and humidity in the space are not satisfied.
      (2.) Hot gas reheat mode shall mix a portion of the hot gas from the discharge of the compressor with the hot liquid refrigerant leaving the condenser coil to create a two−phase heat transfer in the system, resulting in a neutral leaving air temperature when only humidity in the space is not satisfied.
      (3.) Includes head pressure controller.
8. Head Pressure Control Package
   a. Controller shall control coil head pressure by condenser fan speed modulation or condenser fan cycling and wind baffles.
   b. Shall consist of solid−state control and condenser coil temperature sensor to maintain condensing temperature between 90°F (32°C) and 110°F (43°C) at outdoor ambient temperatures down to −20°F (−29°C).
9. Propane Conversion Kit
   a. Package shall contain all the necessary hardware and instructions to convert a standard natural gas unit for use with liquefied propane, up to 2000 ft (610m) elevation.
   b. Additional accessory kits may be required for applications above 2000 ft (610m) elevation.
10. Flue Shield (036−150 sizes only)
    a. Flue shield shall provide protection from the hot sides of the gas flue hood.
11. Condenser Coil Hail Guard Assembly (Factory installed on 3 Phase Models Only. Field installed on all 3 and 1 Phase Models)
    a. Shall protect against damage from hail.
    b. Shall be either hood style or louvered.
12. Unit−Mounted, Non−Fused Disconnect Switch (Available on units with MOCP's of 80 amps or less):
    a. Switch shall be factory installed, internally mounted.
    b. National Electric Code (NEC) and UL approved non−fused switch shall provide unit power shutoff.
    c. Shall be accessible from outside the unit.
    d. Shall provide local shutdown and lockout capability.
13. Convenience Outlet:
    a. Powered convenience outlet. (3 Phase Models Only)
       (1.) Outlet shall be powered from main line power to the rooftop unit.
       (2.) Outlet shall be powered from line side or load side of disconnect by installing contractor, as required by code. If outlet is powered from load side of disconnect, unit electrical ratings shall be UL certified and rated for additional outlet amperage.
       (3.) Outlet shall be factory installed and internally mounted with easily accessible 115−v female receptacle.
       (4.) Outlet shall include 15 amp GFI receptacles with independent fuse protection.
       (5.) Voltage required to operate convenience outlet shall be provided by a factory installed step−down transformer.
       (6.) Outlet shall be accessible from outside the unit.
       (7.) Outlet shall include a field installed "Wet in Use" cover.

b. Non−Powered convenience outlet.
   (1.) Outlet shall be powered from a separate 115/120v power source.
   (2.) A transformer shall not be included.
   (3.) Outlet shall be factory installed and internally mounted with easily accessible 115−v female receptacle.
   (4.) Outlet shall include 15 amp GFI receptacles with independent fuse protection.
   (5.) Outlet shall be accessible from outside the unit.
   (6.) Outlet shall include a field installed “Wet in Use” cover.

14. Flue Discharge Deflector (036−150 sizes only):
    a. Flue discharge deflector shall direct unit exhaust vertically instead of horizontally.
    b. Deflector shall be defined as a “natural draft” device by the National Fuel and Gas (NFG) code.
15. Thru−the−Base Connectors:
    a. Kits shall provide connectors to permit gas and electrical connections to be brought to the unit through the unit basepan.
    b. Minimum of four connection locations per unit.
16. Supply Duct Cover: (180 size only.)
    a. Required when field converting the factory standard vertical duct supply to horizontal duct supply configuration. One required per unit.
17. Propeller Power Exhaust:
    a. Power exhaust shall be used in conjunction with an integrated economizer.
    b. Independent modules for vertical or horizontal return configurations shall be available.
    c. Horizontal power exhaust is shall be mounted in return ductwork.
    d. Power exhaust shall be controlled by economizer controller operation. Exhaust fans shall be energized when dampers open past the 0−100% adjustable setpoint on the economizer control.
18. Roof Curbs (Vertical):
    a. Full perimeter roof curb with exhaust capability providing separate air streams for energy recovery from the exhaust air without supply air contamination.
    b. Formed galvanized steel with wood nailer strip and shall be capable of supporting entire unit weight.
    c. Permits installation and securing of ductwork to curb prior to mounting unit on the curb.
19. High Altitude Gas Conversion Kit:
    a. Package shall contain all the necessary hardware and instructions to convert a standard natural gas unit to operate from 2000−7000 ft (610 to 2134m) elevation with natural gas or from 0−7000 ft (90−2134m) elevation with liquefied propane.
20. Outdoor Air Enthalpy Sensor:
    a. The outdoor air enthalpy sensor shall be used to provide single enthalpy control. When used in conjunction with a return air enthalpy sensor, the unit will provide differential enthalpy control. The sensor allows the unit to determine if outside air is suitable for free cooling.
21. Return Air Enthalpy Sensor:
    a. The return air enthalpy sensor shall be used in conjunction with an outdoor air enthalpy sensor to provide differential enthalpy control.
22. Indoor Air Quality (CO_2) Sensor:
    a. Shall be able to provide demand ventilation indoor air quality (IAQ) control.
    b. The IAQ sensor shall be available in duct mount, wall mount, or wall mount with LED display. The setpoint shall have adjustment capability.
23. Smoke detectors (factory installed only):
    a. Shall be a Four−Wire Controller and Detector.
    b. Shall be environmental compensated with differential sensing for reliable, stable, and drift−free sensitivity.
    c. Shall use magnet−activated test/reset sensor switches.
    d. Shall have tool−less connection terminal access.
    e. Shall have a recessed momentary switch for testing and resetting the detector.
    f. Controller shall include:
       (1.) One set of normally open alarm initiation contacts for connection to an initiating device circuit on a fire alarm control panel.
       (2.) Two Form−C auxiliary alarm relays for interface with rooftop unit or other equipment.

(3.) One Form−C supervision (trouble) relay to control the operation of the Trouble LED on a remote test/reset station.

(4.) Capable of direct connection to two individual detector modules.

(5.) Can be wired to up to 14 other duct smoke detectors for multiple fan shutdown applications

24. Winter start kit
    a. Shall contain a bypass device around the low pressure switch.
    b. Shall be required when mechanical cooling is required down to 25°F (−4°C).
    c. Shall not be required to operate on an economizer when below an outdoor ambient of 40°F (4°C).
25. Time Guard
    a. Shall prevent compressor short−cycling by providing a 5−minute delay (±2 minutes) before restarting a compressor after shutdown for any reason.
    b. One device shall be required per compressor.
26. Disconnect Switch Bracket (180 size only)
    a. Provides a pre−engineered and sized mounting bracket for applications requiring a unit mounted fused and non−fused disconnect of greater than 100 amps. Bracket assures that no damage will occur to coils when mounting with screws and other fasteners.
27. Hinged Access Panels
    a. Shall provide easy access through integrated quarter turn latches.
    b. Shall be on major panels of: filter, control box, fan motor, and compressor.
28. Display Kit for Variable Frequency Drive
    a. Kit allows the ability to access the VFD controller programs to provide special setup capabilities and diagnostics.
    b. Kit contains display module and communication cable.
    c. Display Kit can be permanently installed in the unit or used on any 2−speed indoor fan motor system VFD controller as needed.

Copyright 2015 International Comfort Products
Lewisburg, Tennessee 37091 USA
www.GoComfortmaker.com

Specifications subject to change without notice.