Comfortmaker®
Air Conditioning & Heating

RGH

Product Specifications

HIGH EFFICIENCY PACKAGE GAS HEATING/ELECTRIC COOLING, R–410A SINGLE PACKAGE ROOFTOP 3 – 12.5 TONS (1 & 3–Phase)

BUILT TO LAST, EASY TO INSTALL AND SERVICE

- One–piece, high efficiency gas heating and electric cooling with a low profile, prewired, tested, and charged at the factory
- All units are convertible from downflow to horizontal air flow; no special adapter curbs are necessary
- Full perimeter base rail with built-in rigging adapters and fork truck slots
- Pre–painted exterior panels and primer–coated interior panels tested to 500 hours salt spray protection
- Fully insulated cabinet
- Single-stage cooling capacity control on 036–072 models, two–stage on 090–150 models
- Hot Gas Reheat dehumidification option on High Static motor options
- Redundant gas valve, up to two stages of heating
- Tubular–section type aluminized heat exchanger standard with optional stainless steel exchanger available
- Exclusive IGC solid-state control for on-board diagnostics with LED error code designation, burner control logic and energy saving indoor fan motor delay
- High efficiency, gas heat with induced draft flue exhaust design
- Single Scroll compressor on 036–072 models, dual scroll compressors on 090 –150 models with internal line–break overload protection
- All units have high and low pressure switches
- Two inch disposable fiberglass type return air filters in dedicated rack with tool–less filter access door
- Refrigerant circuits contain a liquid line filter drier to trap dirt and moisture
- Indoor and outdoor coils constructed of aluminum fins mechanically bonded to seamless copper tubes
- Newly–designed indoor refrigerant header for easier maintenance and replacement
- Exclusive non–corrosive composite condensate pan in accordance with ASHRAE 62 Standard, sloping design; side or center drain
- Direct drive high efficiency ECM blower motors on 036–060 single phase models 2 speed indoor fan motor with VFD controller on 090–150 models
- Belt drive evaporator–fan motor and pulley combinations available on all 3 phase models
- Access panels with easy grip handles provide quick and easy access to the blower and blower motor, control box, and compressor.
- Field convertible airflow (036–150). 150 models require a simple supply air duct cover to field convert from factory vertical to horizontal.
- “No–strip” screw system has superior holding power and guides screws into position while preventing the screw from stripping the unit’s metal.
- Newly designed terminal board facilitates simple safety circuit troubleshooting and simplified control box arrangement
- Outdoor temperature cooling operation range up to 125°F (46°C) and down to 25°F (–4°C) using winter start kit
- TXV refrigerant metering devices on all models to precisely control refrigerant flow
- Large, laminated control wiring and power wiring drawings are affixed to unit to make troubleshooting easy
- Standard, medium and high static fan motor options available
- Exclusive IGC anti–cycle protection for gas heat operation
- Provisions for thru–the–bottom power entry capability
- Single point gas and electrical connections
- Optional 2 speed drive motor system utilizes a Variable Frequency Drive (VFD) to automatically adjust the indoor fan motor speed between cooling stages.
- Factory installed Hot Gas Reheat Adaptive Dehumidification System on all sizes, includes MotorMaster I controller.
- “Low NOx” models available that meet California Air Quality Management NOx requirements and include stainless steel heat exchangers

RGH036–060

RGH072–120

c UL us LISTED

ENERGY STAR

As an Energy Star® Partner, International Comfort Products has determined that this product meets the ENERGY STAR® guidelines for energy efficiency.

ASHRAE 90.1 COMPLIANT

AHRI CERTIFIED™ www.ahridirectory.org

Use of the AHRI Certified TM Mark indicates a manufacturer’s participation in the program. For verification of certification for individual products, go to www.ahridirectory.org .

WARRANTY

- 15 Year limited warranty on optional stainless steel heat exchanger
- 10 year limited warranty on aluminized heat exchanger
- 5 Year compressor limited warranty
- 1 Year parts limited warranty

UNIT PERFORMANCE DATA – ONE STAGE COOLING

UNIT	Nom. Tons	COOLING			GAS HEATING		Unit Dimensions H x W x L in [mm]	Unit Weight lb. [kg]
		Net Cap. (Btuh)	SEER	EER	Input Cap (Btuh)	Thermal Eff. %		
RGH036*^XA0AAA	3	36,000	15.0	12.50	72,000–115,000	80–82	33–3/8x46–3/4x74–3/8 (847x1187x1888)	505 (229)
RGH048*^XA0AAA	4	48,500	15.6	13.00	72,000–150,000	80–82	41–3/8x46–3/4x74–3/8 (1051x1187x 1888)	590 (268)
RGH060*^XA0AAA	5	57,500	15.2	12.45	72,000–150,000	80–82	41–3/8x46–3/4x74–3/8 (1051x1187x 1888)	600 (271)
RGH072*^AA0AAA	6	73,000	N/A	12.00	72,000–150,000	80–82	41–1/4x59–1/2x88–1/8 (1048x1510x2238)	765 (347)

UNIT PERFORMANCE DATA – TWO STAGE COOLING

UNIT	Nom. Tons	COOLING			GAS HEATING		Unit Dimensions H x W x L in [mm]	Unit Weight lb. [kg]
		Net Cap. (Btuh)	SEER	EER	Input Cap (Btuh)	Thermal Eff.%		
RGH090*^AA0AAA	7.5	89,000	N/A	12.00	125,000–224,000	82	49–3/8x59–1/2x88–1/8 (1253x1510x2238)	925 (420)
RGH102*^AA0AAA	8.5	97,000	N/A	12.00	125,000–224,000	82	49–3/8x59–1/2x88–1/8 (1253x1510x2238)	925 (420)
RGH110*^AA0AAA	10	111,000	N/A	12.00	180,000–250,000	80–82	49–3/8x59–1/2x88–1/8 (1253x1510x2238)	1099 (499)
RGH120*^AA0AAA	10	115,000	N/A	11.50	180,000–250,000	80–82	49–3/8x59–1/2x88–1/8 (1253x1510x2238)	1099 (499)
RGH150*^AA0AAA	12.5	146,000	N/A	12.20	150,000–240,000	80–81	57–3/8x63–3/8x115–7/8 (1456x1609x2942)	1430 (649)

UNIT PERFORMANCE DATA FOR LOW NOx MODELS

UNIT	Nom. Tons	COOLING			GAS HEATING		Unit Dimensions H x W x L in [mm]	Unit Weight lb. [kg]
		Net Cap. (Btuh)	SEER	EER	Input Cap (Btuh)	Thermal Eff.%		
RGH036*^XA0AAA	3	36,000	15.0	12.50	60,000–90,000	81	33–3/8x46–3/4x74–3/8 (847x1187x 1888)	505 (229)
RGH048*^XA0AAA	4	48,500	15.6	13.00	60,000–120,000	81	41–3/8x46–3/4x74–3/8 (1051x1187x 1888)	590 (268)
RGH060*^XA0AAA	5	57,500	15.2	12.45	60,000–120,000	80–81	41–3/8x46–3/4x74–3/8 (1051x1187x1888)	602 (273)

* Indicates Unit voltage: K = 208/230–1–60, H = 208/230–3–60, L = 460–3–60, S = 575–3–60
^ See model nomenclature listing for gas heating options.

TABLE OF CONTENTS

	PAGE
MODEL NUMBER NOMENCLATURE	4
FACTORY OPTIONS AND/OR ACCESSORIES	5
ARI COOLING RATING TABLE	12
HEAT RATING TABLES	13
SOUND PERFORMANCE TABLE	14
MINIMUM – MAXIMUM AIRFLOW RATINGS	15
PHYSICAL DATA	16
CURBS & WEIGHTS DIMENSIONS	20
OPTIONS AND ACCESSORY WEIGHTS	31
APPLICATION DATA	31
COOLING TABLES	34
STATIC PRESSURE ADDERS	51
GENERAL FAN PERFORMANCE NOTES	51
FAN PERFORMANCE	52
OUTDOOR AIR INTAKE & EXHAUST PERF	68
ELECTRICAL INFO (Units produced on or after July 30, 2012)	69
WIRE/FUSE OR HACR BREAKER SIZING	76
ELECTRICAL INFO (Units produced prior to July 30, 2012)	81
WIRE/FUSE OR HACR BREAKER SIZING	82
SEQUENCE OF OPERATION	92
GUIDE SPECIFICATIONS	95

3 to 12.5 TON ROOFTOP UNIT FIOP CODES (Use with Model Nomenclature on next page)

OPTION	DESCRIPTION
2	Non–Fused Disconnect Switch
4	Easy Access Hinged Panels
5	Unpowered Convenience Outlet
9	Supply Air Smoke Detector

NOMENCLATURE CODE	OPTIONS
0A	None
4B	2
7C	2, 5
7K	2, 5, 9
8A	2, 9
AT	5
BA	5, 9
AA	4
6C	2, 4
6D	2, 4, 5
6L	2, 4, 5, 9
7B	2, 4, 9
BR	9
AB	4, 5
AJ	4, 5, 9
CH	4, 9

MODEL NOMENCLATURE

MODEL SERIES	R	G	H	0	9	0	H	D	A	A	0	A	A	A
Position Number	1	2	3	4	5	6	7	8	9	10	11	12	13	14

R = Rooftop

G = Gas/Electric — **Type**

H = High Efficiency — **Efficiency**

036 = 3 Tons
048 = 4 Tons
060 = 5 Tons
072 = 6 Tons
090 = 7.5 Tons (Dual Compressor)
102 = 8.5 Tons (Dual Compressor)
110 = 10 Tons (Dual Compressor) (12.0 EER)
120 = 10 Tons (Dual Compressor) (11.5 EER)
150 = 12.5 Tons (Dual Compressor)
Nominal Cooling Capacity

K = 208/230-1-60
H = 208/230-3-60
L = 460-3-60
S = 575-3-60
Voltage

D = Low Heat
E = Medium Heat
F = High Heat
S = Low Heat, Stainless Steel Heat Exchanger
R = Medium Heat, Stainless Steel Heat Exchanger
T = High Heat, Stainless Steel Heat Exchanger
L = Low Heat, Low Nox*
M = Medium Heat, Low Nox*
N = High Heat, Low Nox*
Heating Capacity (See spec sheet for actual capacity)

X = Direct drive ECM motor
A = Standard Static Option - (Belt Drive) (Not available on 3 - 5 ton)
C = Medium Static Option (Belt Drive) (All 3 phase models)
B = High Static Option (Belt Drive)(All 3 phase, 1 speed IFM except RGH150) (All 2 speed IFM models)
E = High Static - High Efficient Motor (Belt Drive) (RGH150 with 1 speed IFM)
G = High Static Motor with Hot Gas Re-Heat (Belt Drive) (1 speed IFM - RGH150 only)
H = High Static Motor with Hot Gas Re-Heat (Belt Drive) (All sizes with 1 speed IFM except RGH110 & 150) (All sizes with 2 speed IFM except RGH110)
Motor Option

A = None
B = Economizer w/Bara-relief, OA Temp sensor
E = Economizer w/Bara-relief + CO2 Sensor, OA Temp sensor
H = Economizer w/Bara-relief, enthalpy sensor
L = Economizer w/Bara-relief + CO2 Sensor, enthalpy sensor
U = Temp Ultra Low Leak Economizer w/Bara-relief
W = Enthalpy Ultra Low Leak Economizer w/Bara-relief
P = 2-Position damper w/Baro-relief
No more factory installed economizers for single phase
Outdoor Air Options / Control (See spec sheet for details)

0A = No Options
4B = Non-Fused Disconnect
AT = Non-powered 115v C.O.
BR = Supply Air Smoke Detector
AA = Easy Access Hinged Panels
Factory Installed Options (Not available on 1 phase models)

A = Aluminum / Copper Cond & Alum/Copper Evap Coil
B = Pre-coat Alum/Copper Cond & Alum / Copper Evap (3 Phase only)
C = E-Coated Alum/Copper Cond & Alum / Copper Evap (3 Phase only)
Condenser / Evaporator Coil Configuration

A = Standard Motor
T = 2 Speed Indoor Fan VFD Controller (For 2-stage units only)
Motor Type Option

* RGH 3 to 5 ton models only

Note: On single phase (K voltage code) models, the following are not available as factory installed options:
- Coated or copper fin coils
- Economizers or 2 position dampers
- Hot Gas Re-heat

Table 1 – FACTORY INSTALLED OPTIONS AND FIELD INSTALLED ACCESSORIES

CATEGORY	ITEM	FACTORY INSTALLED OPTION	FIELD INSTALLED ACCESSORY
Cabinet	Thru–the–base electrical or gas–line connections		X
	Hinged Access Panels	X	
	Supply Duct Cover (12.5 ton only)		X
Coil Options	Copper/Copper indoor and/or outdoor coils	X	
	Pre–coated outdoor coils	X	
	Premium, E–coated outdoor coils	X	
Condenser Protection	Condenser coil hail guard (louvered design)	X	X
Humidity Control	Hot Gas Reheat Dehumidification System	X	
Controls	Smoke detector (supply air)	X	
	Time Guard II compressor delay control circuit		X
	Phase Monitor		X
	Temperature sensors		X
Economizers & Outdoor Air Dampers	Economizer IV	X	X
	Ultra Low Leak Economizer X for 2–speed Indoor Fan VFD Controller (For 2–stage units only) Vertical supply/return only.	X	X
	Motorized 2 position outdoor–air damper	X	X
	Manual outdoor–air damper (25% and 50%)		X
	Barometric relief[1]	X	X
	Power exhaust		X
Economizer Sensors & IAQ Devices	Single dry bulb temperature sensors[2]	X	X
	Differential dry bulb temperature sensors[2]		X
	Single enthalpy sensors[2]	X	X
	Differential enthalpy sensors[2]		X
	Wall or Duct mounted CO_2 sensors[2]		X
	Unit Mounted CO_2 sensor[2]	X	
Gas Heat	Propane conversion kit		X
	Stainless Steel Heat Exchanger	X	
	High altitude conversion kit		X
	Flue Shield		X
	Flue Discharge Deflector		
Indoor Motor & Drive	Multiple motor and drive packages	X	
	2–Speed VFD drive motor system	X	
	VFD Remote keypad kit		X
Low Ambient Control	Winter start kit[4]		X
	Head pressure controller[4]		X
Power Options	Convenience outlet (unpowered)	X	
	Non–fused disconnect	X	
Roof Curbs	Roof curb 14” (356mm)		X
	Roof curb 24” (610mm)		X

NOTES:
1. Included with economizer.
2. Sensors used to optimize economizer performance.
3. See application data for assistance.
4. Factory Installed Options are NOT available on single phase models.

FACTORY OPTIONS AND/OR ACCESSORIES

2−Speed VFD Drive Motor

The 2−speed VFD drive motor system saves energy and installation time by utilizing a Variable Frequency Drive (VFD) to automatically adjust the indoor fan motor speed in sequence with the units cooling operation. Per ASHRAE 90.1 2010 standard section 6.4.3.10.b, during the first stage of cooling operation the VFD will adjust the fan motor to provide 2/3rd of the total cfm established for the unit. When a call for the second stage of cooling is required, the VFD will allow the total cfm for the unit established (100%). During the heating mode the VFD will allow total design cfm (100%) operation and during the ventilation mode the VFD will allow operation to 2/3rd of total cfm.

Compared to single speed indoor fan motor systems, 2 speed system can save substantial energy, 25%+, versus single speed indoor fan motor systems.

The VFD used in the system has soft start capabilities to slowly ramp up the speeds, thus eliminating any high in rush air volume during initial start−up. It also has internal over−current protection for the fan motor and a field installed display kit that allows adjustment and in depth diagnostics of the VFD.

This system is available on models with 2−stage cooling operation with electro−mechanical controls. Both space sensor and conventional thermostats/controls can be used to provide accurate control in any application.

The system is very flexible for initial fan performance set up and adjustment. The standard factory shipped VFD is pre−programmed to automatically stage the fan speed between the first and second stage of cooling. The unit fan performance static pressure and cfm can be easily adjusted using the traditional means of pulley adjustments. The other means to adjust the unit static and cfm performance is to utilize the field installed Display Kit and adjust the frequency and voltage in the VFD to performance requirements. In either case, once set up, the VFD will automatically adjust the speed between the cooling stage operations.

Economizer (dry−bulb or enthalpy)

Economizers save money. They bring in fresh, outside air for ventilation; and provide cool, outside air to cool your building. This is the preferred method of low−ambient cooling. When coupled to CO_2 sensors, economizers can provide even more savings by coupling the ventilation air to only that amount required.

Economizers are available, installed and tested by the factory (3 phase only), with either enthalpy or dry−bulb temperature inputs. There are also models for electromechanical as well as direct digital controllers. Additional sensors are available as accessories to optimize the economizers.

Economizers include gravity controlled, barometric relief equalizes building pressure and ambient air pressures. This can be a cast effective solution to prevent building pressurization.

CO_2 Sensor

Improves productivity and saves money by working with the economizer to intake only the correct amount of outside air for ventilation. As occupants fill your building, the CO_2 sensor detects their presence through increasing CO_2 levels, and opens the economizer appropriately.

When the occupants leave, the CO_2 levels decrease, and the sensor appropriately closes the economizer. This intelligent control of the ventilation air, called Demand Control Ventilation (DCV) reduces the overall load on the rooftop, saving money.

Smoke Detectors

Smoke detectors immediately shut down the rooftop unit when smoke is detected. Supply air smoke detectors are available, installed by the factory.

Louvered Hail Guards

Sleek, louvered panels protect the condenser coil from hail damage, foreign objects, and incidental contact.

Convenience Outlet (un−powered)

Installed at the factory, this service feature provides a convenient, 15 amp, 115v GFCI receptacle with “Wet in Use” cover. The “unpowered” option is to be powered from a separate 115/120v power source.

Non−fused Disconnect

This OSHA−compliant, factory−installed, safety switch allows a service technician to locally secure power to the rooftop.

Power Exhaust with Barometric Relief

Superior internal building pressure control. This field−installed accessory may eliminate the need for costly, external pressure control fans.

Time Guard II Control Circuit

This accessory protects your compressor by preventing short−cycling in the event of some other failure, prevents the compressor from restarting for 30 seconds after stopping.

Motorized 2−Position Damper

The 2−position, motorized outdoor air damper admits up to 100% outside air. Using reliable, gear−driven technology, the 2−position damper opens to allow ventilation air and closes when the rooftop stops, stopping unwanted infiltration.

Manual OA Damper

Manual outdoor air dampers are an economical way to bring in ventilation air. The dampers are available in 25% and 50% versions.

Hot Gas Reheat Adaptive Dehumidification System

Our Hot Gas Reheat adaptive dehumidification system is an all−inclusive factory installed option that can be ordered with any High Static motor.

This system expands the envelope of operation of our rooftop products to provide unprecedented flexibility to meet year round comfort conditions.

The Hot Gas Reheat adaptive dehumidification system has the industry’s only dual dehumidification mode setting. The system includes two new modes of operation.

The rooftop unit coupled with the Hot Gas Reheat system is capable of operating in normal design cooling mode, subcooling mode, and hot gas reheat mode. Normal design cooling mode is when the unit will operate under its normal sequence of operation by cycling compressors to maintain comfort conditions.

Subcooling mode will operate to satisfy part load type conditions when the space requires combined sensible and a higher proportion of latent load control. Hot Gas Reheat mode will operate when outdoor temperatures diminish and the need for latent capacity is required for sole humidity control. Hot Gas Reheat mode will provide neutral air for maximum dehumidification operation.

Hinged Access Panels

Allows access to unit's major components with specifically designed hinged access panels. Panels are: filter, control box, fan motor and compressor.

Motormaster Head Pressure Controller

The Motormaster motor controller is a low ambient, head pressure controller kit that is designed to maintain the unit's condenser head pressure during periods of low ambient cooling operation. This device should be used as an alternative to economizer free cooling not when economizer usage is either not appropriate or desired. The Motormaster will either cycle the outdoor–fan motors or operate them at reduced speed to maintain the unit operation, depending on the model.

Winter Start Kit

The winter start kit extends the low ambient limit of your rooftop to 25°F (–4°C). The kit bypasses the low pressure switch, preventing nuisance tripping of the low pressure switch. Other low ambient precautions may still be prudent.

Propane Heating

Convert gas heat rooftop from standard natural gas operation to Propane using this field–installed kit.

High Altitude Heating

High altitudes have less oxygen, which means heat exchangers need less fuel. The new gas orifices in this field–installed kit make the necessary adjustment for high altitude applications. They restore the optimal fuel to air mixture and maintain healthy combustion at altitudes above 2000 ft (610m). Kits may not be required in all areas.

Flue Discharge Deflector

The flue discharge deflector is a useful accessory when flue gas recirculation is a concern. By venting the flue discharge upwards, the deflector minimizes the chance for a neighboring unit to intake the flue exhaust.

Optional Stainless Steel Heat Exchanger

The stainless steel heat exchanger option provides the tubular heat exchanger be made out of a minimum 20 gauge type 409 stainless steel for applications where the mixed air to the heat exchanger is expected to drop below 45°F (7°C). Stainless steel may be specified on applications where the presence of airborne contaminants require its use (applications such as paper mills) or in area with very high outdoor humidity that may result in severe condensation in the heat exchanger during cooling operation.

Flue Discharge Heat Shield

The flue discharge heat shield keeps people from touching the rooftop unit's potentially hot flue discharge. This is especially useful for ground level applications, where more, untrained people could have access to the unit's exterior.

Alternate Motors and Drives

Some applications need larger horsepower motors, some need more airflow, and some need both. A wide selection of motors and pulleys (drives) are available, factory installed, to handle nearly any application.

Thru–the–Base Connections

Thru–the–base connections, available as an accessory, are necessary to ensure proper connection and seal when routing wire and piping through the rooftop's basepan and curb. These couplings eliminate roof penetration and should be considered for gas lines, main power lines, as well as control power.

ACCESSORIES – RGH036–150

ECONOMIZERS		
Model Number	**Description**	**Use With Model Size**
DNECOMZR020A02	Vertical Economizer IV with solid–state controller, gear–driven, fully modulating damper, spring return actuator, up to 100% barometric relief, supply and outdoor air sensors, and CO2 sensor compatible.	036 – 060
DNECOMZR021A03		072 – 120
DNECOMZR062A00		150
CRECOMZR069A00[1,2]	Ultra Low Leak Vertical[3] Economizer X with solid–state W7220 controller, gear–driven, modulating damper, spring return actuator, up to 100% barometric relief, supply and outdoor air sensors, and CO2 sensor compatible, for use in electro mechanical controls only.	090 – 120
CRECOMZR071A00[1,2]	Ultra Low Leak Vertical[3] Economizer X with solid–state W7220 controller, gear–driven, modulating damper, spring return actuator, up to 100% barometric relief, supply and outdoor air sensors, and CO2 sensor compatible, for use in electro mechanical controls only.	150
DNECOMZR024A02	Horizontal Economizer IV with solid–state controller, gear–driven, fully modulating damper, spring return actuator, up to 100% barometric relief, supply and outdoor air sensors, and CO2 sensor compatible.	036 – 060
DNECOMZR025A02		072 – 120
DNECOMZR064A00		150

[1] Economizer X cannot be installed with Economizer IV, manual damper, or motorized damper.
[2] Can only be used on electrical mechanical units with 2–stage cooling and 2–speed fan control.
[3] Economizer X is currently only available on vertical air flow configuration models.

POWER EXHAUST *		
Model Number	**Description**	**Use With Model Size**
DNPWREXH030A01	Vertical Power Exhaust 208/230 volt (1 or 3 Phase)	036 – 060
DNPWREXH021A01	Vertical Power Exhaust 460 volt	036 – 060
DNPWREXH022A01	Vertical Power Exhaust 208/230–3–60 volt	072 – 120
DNPWREXH023A01	Vertical Power Exhaust 460 volt	072 – 120
DNPWREXH080A00	Vertical Power Exhaust 208/230–3–60 volt	150
DNPWREXH081A00	Vertical Power Exhaust 460 volt	150
DNPWREXH028A01	Horizontal Power Exhaust 208/230 (1 or 3 Phase) & 575 volt	036 – 120
DNPWREXH029A01	Horizontal Power Exhaust 460 volt	036 – 120
DNPWREXH082A00	Horizontal Power Exhaust 208/230 & 575 volt	150
DNPWREXH083A00	Horizontal Power Exhaust 460 volt	150

* Vertical Power Exhaust requires a vertical economizer. Horizontal Power Exhaust should be duct–mounted in the return duct.

MANUAL OUTDOOR AIR DAMPERS		
Model Number	**Description**	**Use With Model Size**
CRMANDPR001A03	25% Open Manual Fresh Air Damper	036 – 060
CRMANDPR001A02	50% Open Manual Fresh Air Damper	036 – 060
CRMANDPR002A03	25% Open Manual Fresh Air Damper	072 – 120
CRMANDPR002A02	50% Open Manual Fresh Air Damper	072 – 120
CRMANDPR011A00	50% Open Manual Fresh Air Damper	150

MOTORIZED OUTDOOR AIR DAMPERS		
Model Number	**Description**	**Use With Model Size**
CRTWOPOS010A00	Motorized 2 position outdoor air damper (25–100% Outdoor Air)	036 – 060
CRTWOPOS011A00		072 – 120
CRTWOPOS014A00		150

NOTE: Economizer IV, Economizer X, Manual Damper and 2–Position damper are all mutually exclusive and cannot be installed together.

1. Manual dampers include hood assembly, bird screen, adjustable damper blade (to allow up to the rated outdoor air %), and bottom panel with opening.
2. Motorized dampers include bottom panel with opening (100% two–position damper includes 30% barometric relief capability), and adjustable damper (to allow up to the rated outdoor air %)
3. Motorized dampers will close on loss of power to the rooftop unit.
   Manual and motorized dampers are not compatible with a vertical power exhaust module.

ACCESSORIES – RGH036–150 (cont.)

LOW AMBIENT CONTROLS *		
Model Number	**Description**	**Use With Model Size**
32LT900301[1]	Motormaster I –20°F (–29°C) Low Ambient Control	036 – 102, 208/230–1–60, 208/203–3–60, 575–3–60
32LT900611[1]	Motormaster I –20°F (–29°C) Low Ambient Control	048 – 102, 460–3–60
CPLOWAMB001A00	Motormaster® II –0°F (–18°C) Low Ambient Control	036 – 150, 208/230–1, 208/230–3, 460–3–60
1178185 [2]	Motormaster I Compatible Condenser Fan Motor	036, 208/230–3–60, 575–3–60
1178186 [2]	Motormaster I Compatible Condenser Fan Motor	036, 460–3–60
1171974 [2]	Motormaster I Compatible Condenser Fan Motor	048 – 102, 208/230–3–60, 575–3–60
1171975 [2]	Motormaster I Compatible Condenser Fan Motor	048 – 102, 460–3–60
CRLOWAMB030A00[3]	Motormaster® V Low Ambient Control Mechanical cooling operation down to –20°F (–29°C)	120, 208/230–3–60
CRLOWAMB031A00[3]		120, 460–3–60
CRLOWAMB032A00[3]		120, 575–3–60
CRLOWAMB039A00	Motormaster I Low Ambient Kit. Mechanical cooling operation down to –20° F (– 29° C). Kit includes 3 motors, MotorMaster controller, wiring label, and required wire ties and connectors, DNWINSTR001A00 also required (one per refrigerant circuit)	150, 208/230–3–60
CRLOWAMB040A00	Motormaster I Low Ambient Kit. Mechanical cooling operation down to –20° F (– 29° C). Kit includes 3 motors, MotorMaster controller, wiring label, and required wire ties and connectors) 575 Volt models also require CRTRXKIT002A00 plus DNWINSTR001A00 also required (one per refrigerant circuit)	150, 460–3–60
CRTRXKIT001A00	Motormaster I Low Ambient Control – Transformer Kit. Must be used in conjunction with Low Ambient Controller if used on 575–3–60 volt models.	150, 575–3–60

*See usage tables in kit instructions.
[1] Requires motor change out.
[2] Available from FAST Parts.
Note: Sizes 036–060 requires (1) low ambient controller and (1) compatible condenser fan motor for change out
Sizes 072–102 requires (1) low ambient controller and (2) compatible condenser fan motors for change out
[3] No motor change is required on these specific models. Requires two DNWINSTR001A00 Winter Start kits (one per circuit).

FLAT ROOF CURBS		
Model Number	**Description**	**Use With Model Size**
CRRFCURB001A01	14” High Roof Curb. Ductwork attaches to the roof curb. Includes thru−the−bottom capability.	036 – 060
CRRFCURB003A01		072 – 120
CRRFCURB074A00		150
CRRFCURB002A01	24” High Roof Curb. Ductwork attaches to the roof curb. Includes thru−the−bottom capability.	036 – 060
CRRFCURB004A01		072 – 120
CRRFCURB075A00		150
ACCESSORY KITS FOR UNITS WITH HINGED ACCESS PANELS		
Model Number	**Description**	**Use With Model Size**
DNHNGPNL001A00	Horizontal accessory kit. Required when field installing a two position damper or vertical economizer. Includes angle and seal strip.	036 – 060
DNHNGPNL002A00		072 – 120
DNPECONV003A00	Vertical accessory kit. Required when field installing a two position damper or vertical economizer. Includes door panel, angle and seal strip	036 – 060
DNPECONV004A00		072 – 120
LOUVERED HAIL GUARDS – CONDENSER COIL		
Model Number	**Description**	**Use With Model Size**
CRLVHLGD012A00	Louvered Condenser Coil Hail Guard	036
CRLVHLGD013A00	Louvered Condenser Coil Hail Guard	048 – 060
CRLVHLGD014A00	Louvered Condenser Coil Hail Guard	072
CRLVHLGD016A00	Louvered Condenser Coil Hail Guard	090 – 120
CRLVHLGD032A00	Louvered Condenser Coil Hail Guard	150
575V TRANSFORMER		
Model Number	**Description**	**Use With Model Size**
1171494 [2]	Transformer for conversion from 575v to 208/230v power exhaust applications.	036 – 150
SPECIAL – 150 SIZE SPECIFIC ACCESSORIES		
Model Number	**Description**	**Use With Model Size**
CRDISBKT001A00	Disconnect Switch Bracket – Provides a pre engineered and sized mounting bracket for applications requiring a unit mounted fused and non−fused diconnect of greater than 100 amps. Bracket assures that no damage will occur to coils when mounting with screws and other fasteners.	150
CRDUCTCV002A00	Supply Duct Cover – This supply duct cover is required when field converting the factory standard vertical duct supply to horizontal duct supply configuration. One required per unit.	150
CONTROL UPGRADE KITS		
Model Number	**Description**	**Use With Model Size**
CRDISKIT001A00	2−Speed VFD display kit provides the field capability to set up points and troubleshooting codes on the VFD controller. Can be used for any associated unit with VFD.	All 2−Speed VFD Controllers
NRTIMEGD001A00	Time Guard II	036 – 150
DNWINSTR001A00	Electronic phase monitor breaks “R” control signal if trouble is detected.(Allows operation down to 25°F from standard 40°F.)	036 – 150
CRPHASE3001A02	Phase Monitor Control	All 208/230v, 460v (3 Ph only)
CRPHASE3002A00	Phase Monitor Control	All 575v
CRSTATUS001A02	Fan/Filter Status Switch	036 – 150
CRSDTEST001A00	Remote keyed attenuator / test / reset station	036 – 150

ACCESSORIES – RGH036–150 (cont.)

THROUGH–THE–BOTTOM/CURB POWER CONNECTION		
Model Number	**Description**	**Use With Model Size**
CRBTMPWR001A01	Thru–the–bottom electrical connections and thru–the–curb gas connections. Includes a 3/4–inch diameter liquid tight conduit fitting for high voltage power wires	036 – 060
CRBTMPWR002A01	Thru–the–bottom electrical connections and thru–the–curb gas connections. Includes a 1–1/4–inch diameter liquid tight conduit fitting for high voltage power wires	072 – 120
CRBTMPWR003A01	Thru–the–bottom power, control, and gas connections. Includes a 3/4–inch diameter liquid tight conduit fitting for high voltage power wires	036 – 060
CRBTMPWR004A01	Thru–the–bottom power, control, and gas connections. Includes a 1–1/4–inch diameter liquid tight conduit fitting for high voltage power wires	072 – 120
CRBTMPWR005A00	Thru–the–bottom power, control, and gas connections. Includes a 1–1/4 inch diameter liquid tight conduit fitting for high voltage power wires	150
CRBTMPWR006A00	Thru–the–bottom power, control, and gas connections. Includes a 1–1/2 inch diameter liquid tight conduit fitting for high voltage power wires	
CRBTMPWR007A00	Thru–the–bottom power, control, and gas connections. Includes a 2 inch diameter liquid tight conduit fitting for high voltage power wires	

ECONOMIZER SENSORS		
Model Number	**Description**	**Use With Model Size**
DNTEMPSN002A00	Outdoor or Return Dry Bulb Sensor used with Electro–Mechanical Control	Economizers IV
DNCBDIOX005A00	CO2 Sensor for use in return airstream. Also includes Aspirator Box required for Duct Mounting.	Economizers IV & X
DNENTDIF004A00	Return Air Enthalpy Sensor used with Electro–Mechanical controls, use with AX078ENT for differential enthalpy control	Economizers IV
AXB078ENT	Economizer Differential Enthalpy Control Upgrade	Economizers IV
CRTEMPSN005A00	Outdoor or Return Dry Bulb Temperature Sensor used with Honeywell W7220 Electro-Mechanical control.	Economizers X
–HH–57AC–081	Enthalpy Control for W7220 Controller only, (One required for single enthalpy, two required for different enthalpy)	Economizers X

LP GAS CONVERSION KITS		
Model Number	**Description**	**Use With Model Size**
CRLPELEV001A00	LP and Hi Altitude conversion kit. Contains spuds sizes 31, 32, 33, 35, and 36.	036 – 120
CRLPELEV002A00	LP and Hi Altitude conversion kit. Contains spuds sizes 37, 38, 39, 44, and 45.	036 – 120
CRLPELEV003A00	LP and Hi Altitude conversion kit. Contains spuds sizes 46, 47, 48, 49, and 50.	036 – 120
CRLPELEV004A00	LP and Hi Altitude conversion kit. Contains spuds sizes 51, 52, 53, 54, and 55.	036 – 120
CRLPELEV007A00	LP and Hi Altitude conversion kit. Contains spuds sizes 36, 37, 38, and 39.	150
CRLPELEV008A00	LP and Hi Altitude conversion kit. Contains spuds sizes 40, 41, 42, and 43.	150
CRLPELEV009A00	LP and Hi Altitude conversion kit. Contains spuds sizes 51, 52, 53, 54, and 55.	150

HEATING UPGRADE KITS*		
Model Number	**Description**	**Use With Model Size**
CRFLUEDS001A00	Flue Discharge Deflector	036 – 120
CRFLUEHD001A01	Flue Exhaust Heat Shield	036 – 120
CRFLUEDS007A00	Flue Discharge Deflector	150

*CRFLUEDS001A00 and CRFLUEHD001A01 are mutually exclusive. Cannot install both on the same unit.

Table 2 – ARI COOLING RATING TABLE – 1 Stage

UNIT RGH	COOLING STAGES	NOM. CAPACITY (TONS)	NET COOLING CAPACITY (MBH)	TOTAL POWER (kW)	SEER	EER	IEER
036	1	3	36.0	2.9	15.00	12.50	N/A
048	1	4	48.5	3.7	15.60	13.00	N/A
060	1	5	57.5	4.6	15.20	12.45	N/A
072	1	6	73.0	6.0	N/A	12.00	13.00

Table 3 – ARI COOLING RATING TABLE – 1 Stage

UNIT RGH	COOLING STAGES	NOM. CAPACITY (TONS)	NET COOLING CAPACITY (MBH)	TOTAL POWER (kW)	SEER	EER	IEER With 1–Speed Indoor Motor	IEER With 2–speed Indoor Motor
090	2	7.5	89.0	7.4	N/A	12.00	13.00	13.80
102	2	8.5	97.0	8.1	N/A	12.00	13.00	13.80
110	2	10	111.0	9.3	N/A	12.00	12.60	14.30
120	2	10	115.0	10.0	N/A	11.50	12.00	12.40
150	2	12.5	146.0	11.9	N/A	12.20	13.00	13.90

LEGEND

AHRI – Air Conditioning, Heating and Refrigeration Institute Test Standard
ASHRAE – American Society of Heating, Refrigerating and Air Conditioning, Inc.
EER – Energy Efficiency Ratio
IEER – Integrated Energy Efficiency Ratio
SEER – Seasonal Energy Efficiency Ratio

Use of the AHRI Certified TM Mark indicates a manufacturer's participation in the program. For verification of certification for individual products, go to www.ahridirectory.org .

As an Energy Star® Partner, International Comfort Products has determined that this product meets the ENERGY STAR® guidelines for energy efficiency.

NOTES:

1. Rated and certified under AHRI Standard 210/240–06 or 340/360–04, as appropriate.
2. Ratings are based on:
Cooling Standard: 80°F (27°C) db, 67°F (19°C) wb indoor air temp and 95°F (35°C) db outdoor air temp.
IPLV Standard: 80°F (27°C) db, 67°F (19°C) wb indoor air temp and 80°F (27°C) db outdoor air temp.
IEER Standard: Procedure described in ARI Standard 340/360.
3. All RGH units comply with ASHRAE 90.1 2001, 2004 Energy Standard for minimum SEER and EER requirements.
4. RGH units comply with US Energy Policy Act (2005). To evaluate code compliance requirements, refer to state and local codes or visit the following website: http://bcap–energy.org .

Table 4 – HEATING RATING TABLE – NATURAL GAS & LIQUID PROPANE

Units RGH		Gas Heat	AL/SS HEAT EXCHANGER INPUT / OUTPUT STAGE 1 (MBH)	AL/SS HEAT EXCHANGER INPUT / OUTPUT STAGE 2 (MBH)	TEMP RISE (DEG F)	THERMAL EFFICIENCY (%)	AFUE (%)
036	Single Phase	LOW		72 / 56	25 – 55	82%	79.1%
		MED		115 / 89	55 – 85	80%	78.5%
		HIGH		–	–	–	–
048		LOW		72 / 56	25 – 55	82%	79.1%
		MED		115 / 90	35 – 65	81%	79.0%
		HIGH		150 / 117	50 – 80	80%	78.8%
060		LOW		72 / 56	20 – 55	82%	79.1%
		MED		115 / 90	30 – 65	81%	79.0%
		HIGH		150 / 117	40 – 80	80%	78.8%
036	Three Phase	LOW	50 / 41	72 / 59	25 – 55	82%	N/A
		MED	82 / 66	115 / 90	55 – 85	80%	N/A
		HIGH	–	–	–	–	–
048		LOW	50 / 41	72 / 56	25 – 55	82%	N/A
		MED	82 / 66	115 / 90	35 – 65	81%	N/A
		HIGH	120 / 96	150 / 117	50 – 80	80%	N/A
060		LOW	50 / 41	72 / 56	20 – 55	82%	N/A
		MED	82 / 66	115 / 90	30 – 65	81%	N/A
		HIGH	120 / 96	150 / 117	40 – 80	80%	N/A
072		LOW	50 / 41	72 / 59	15 – 55	82%	N/A
		MED	90 / 73	125 / 103	20 – 50	82%	N/A
		HIGH	105 / 84	150 / 120	30 – 60	81%	N/A
090		LOW	90 / 73	125 / 103	20 – 50	82%	N/A
		MED	120 / 98	180 / 148	35 – 65	82%	N/A
		HIGH	180 / 147	224 / 184	45 – 75	82%	N/A
102		LOW	90 / 73	125 / 103	20 – 50	82%	N/A
		MED	120 / 98	180 / 148	30 – 65	82%	N/A
		HIGH	180 / 147	224 / 184	40 – 75	82%	N/A
110		LOW	120 / 98	180 / 148	25 – 65	82%	N/A
		MED	180 / 147	224 / 184	30 – 65	82%	N/A
		HIGH	200 / 160	250 / 205	35 – 70	80%	N/A
120		LOW	120 / 98	180 / 148	25 – 65	82%	N/A
		MED	180 / 147	224 / 184	30 – 65	82%	N/A
		HIGH	200 / 160	250 / 205	35 – 70	80%	N/A
150		LOW	120 / 98	150 / 120	15 – 60	80%	N/A
		MED	180 / 147	180 / 146	20 – 55	81%	N/A
		HIGH	192 / 156	240 / 195	25 – 60	81%	N/A

NOTES:

Heat ratings are for natural gas heat exchangers operated at or below 2000 ft (610 m). For information on Propane or altitudes above 2000 ft (610 m), see the Application Data section of this book. Accessory Propane/High Altitude kits are also available.

In the USA the input rating for altitudes above 2000 ft (610m) must be derated by 4% for each 1000 ft (305 m) above sea level. In Canada, the input rating must be derated by 10% for altitudes of 2000 ft (610 m) to 4500 ft (1372 m) above sea level.

Table 5 – HEATING RATING TABLE – LOW NO_x[1]

UNIT RGH		GAS HEAT	LOW NOx HEAT EXCHANGER INPUT / OUTPUT STAGE 1 (MBH)	LOW NOx HEAT EXCHANGER INPUT / OUTPUT STAGE 2 (MBH)	TEMP RISE (DEG F)	THERMAL EFFICIENCY (%)	AFUE (%)
036	Single Phase	LOW	–	60 / 47	20 – 50	81%	80.6%
		MED	–	90 / 72	30 – 60	81%	80.6%
		HIGH	–	–	–	–	–
048		LOW	–	60 / 47	20 – 50	81%	80.6%
		MED	–	90 / 72	30 – 60	81%	80.6%
		HIGH	–	120 / 97	40 – 70	81%	81.5%
060		LOW	–	60 / 47	15 – 50	81%	80.6%
		MED	–	90 / 72	25 – 60	80%	80.6%
		HIGH	–	120 / 97	35 – 70	80%	81.5%
036	Three Phase	LOW	–	60 / 47	20 – 50	81%	80.0%
		MED	–	90 / 74	30 – 60	81%	81.0%
		HIGH	–	–	–	–	–
048		LOW	–	60 / 47	20 – 50	81%	80.0%
		MED	–	90 / 72	30 – 60	81%	81.0%
		HIGH	–	120 / 97	40 – 70	81%	80.0%
060		LOW	–	60 / 47	15 – 50	81%	80.0%
		MED	–	90 / 72	25 – 60	80%	81.0%
		HIGH	–	120 / 97	35 – 70	80%	81.0%

NOTE:
1. Units meet California's South Coast Air Quality Management District (SCAQMD) Low–NO_x emissions requirement of 40 nanograms per joule or less.

Table 6 – SOUND PERFORMANCE TABLE

UNIT RGH	COOLING STAGES	OUTDOOR SOUND (dB) AT 60								
		A–WEIGHTED	63	125	250	500	1000	2000	4000	8000
036	1	76	78.2	78.0	74.2	73.3	70.6	66.0	62.4	56.9
048	1	78	84.7	83.6	77.1	74.6	72.3	68.3	64.7	60.9
060	1	77	87.5	82.5	76.1	73.6	71.3	67.1	64.1	60.0
072	1	82	90.1	82.6	81.0	79.4	77.0	73.0	70.4	66.7
090	2	82	90.6	84.3	80.2	79.3	77.1	72.2	67.4	63.7
102	2	82	88.6	85.0	81.6	79.5	77.4	74.1	71.0	66.3
110	2	87	85.9	87.9	85.6	84.4	82.8	78.5	74.9	72.5
120	2	87	85.9	87.9	85.6	84.4	82.8	78.5	74.9	72.5
150	2	83	89.3	86.0	82.9	80.7	78.5	73.6	69.6	64.5

LEGEND
dB – Decibel

Use of the AHRI Certified TM Mark indicates a manufacturer's participation in the program. For verification of certification for individual products, go to www.ahridirectory.org

NOTES:
1. Outdoor sound data is measure in accordance with AHRI standard 270–95.
2. Measurements are expressed in terms of sound power. Do not compare these values to sound pressure values because sound pressure depends on specific environmental factors which normally do not match individual applications. Sound power values are independent of the environment and therefore more accurate.
3. A–weighted sound ratings filter out very high and very low frequencies, to better approximate the response of "average" human ear. A–weighted measurements are taken in accordance with AHRI standard 270–95.

Table 7 – MINIMUM – MAXIMUM AIRFLOW RATINGS – NATURAL GAS & LIQUID PROPANE

UNIT RGH	HEAT LEVEL	COOLING				HEATING	
		Minimum Single Speed Fan Motor	Minimum 2–speed Fan Motor (at high speed)	Minimum 2–speed Fan Motor (at low speed)	Maximum	Minimum	Maximum
036	LOW	900	–	–	1500	990	2190
	MED					1000	1550
	HIGH					–	–
048	LOW	1200	–	–	2000	990	2190
	MED					1330	2460
	HIGH					1390	2220
060	LOW	1500	–	–	2500	990	2730
	MED					1330	2880
	HIGH					1390	2780
072	LOW	1800	–	–	3000	990	3640
	MED					1330	4750
	HIGH					1390	3750
090	LOW	2250	2535	1673	3750	1900	4750
	MED					2100	3900
	HIGH					2270	3780
102	LOW	2550	2550	1683	4250	1900	4750
	MED					2100	4560
	HIGH					2270	4250
110	LOW	3000	3380	2231	5000	1900	4750
	MED					2100	4560
	HIGH					2270	4250
120	LOW	3000	3380	2231	5000	2100	5470
	MED					2620	5670
	HIGH					2650	5290
150	LOW	3750	4225	2789	6250	1880	7500
	MED					2450	6750
	HIGH					3000	7200

Table 8 – PHYSICAL DATA (COOLING) 3 – 6 TONS

UNIT: RGH	036	048	060	072
Refrigeration System				
# Circuits / # Comp. / Type	1 / 1 / Scroll	1 / 1 / Scroll	1 / 1 / Scroll	1 / 1 / Scroll
R–410A refrig. charge A/B (lbs–oz)	9 – 0	12 – 8	13 – 3	14 – 0
Hot Gas Reheat R–410A refrig. charge A/B (lbs–oz)	11 – 0	19 –12	20 – 0	22 – 8
Metering Device	TXV	TXV	TXV	TXV
High–press. Trip / Reset (psig)	630 / 505	630 / 505	630 / 505	630 / 505
Low–press. Trip / Reset (psig)	54 / 117	54 / 117	54 / 117	54 / 117
Compressor Capacity Staging (%)	100%	100%	100%	100%
Evap. Coil				
Material (Tube Fin)	Cu / Al	Cu / Al	Cu / Al	Cu / Al
Coil type	3/8” RTPF	3/8” RTPF	3/8” RTPF	3/8” RTPF
Rows / FPI	3 / 15	3 / 15	4 / 15	3 / 15
Total Face Area (ft^2)	5.5	7.3	7.3	8.9
Condensate Drain Conn. Size	3/4”	3/4”	3/4”	3/4”
Hot Gas Reheat Coil				
Material (Tube Fin)	Cu / Al	Cu / Al	Cu / Al	Cu / Al
Coil type	3/8” RTPF	3/8” RTPF	3/8” RTPF	3/8” RTPF
Rows / FPI	1 / 17	2 / 17	2 / 17	2 / 17
Total Face Area (ft^2)	3.9	5.2	5.2	5.2
Evap. Fan and Motor				
Standard Static 1 phase				
Motor Qty / Drive Type	1 / Direct	1 / Direct	1 / Direct	–
Max BHP	1	1	1	–
RPM Range	600–1200	600–1200	600–1200	–
Motor Frame Size	48	48	48	–
Fan Qty / Type	1 / Centrifugal	1 / Centrifugal	1 / Centrifugal	–
Fan Diameter (in)	10 x 10	10 x 10	11 x 10	–
Standard Static 3 phase				
Motor Qty / Drive Type	–	–	–	1 / Belt
Max BHP	–	–	–	1.7
RPM Range	–	–	–	489–747
Motor Frame Size	–	–	–	56
Fan Qty / Type	–	–	–	1 / Centrifugal
Fan Diameter (in)	–	–	–	15 x 15
Medium Static 3 phase				
Motor Qty / Drive Type	1 / Belt	1 / Belt	1 / Belt	1 / Belt
Max BHP	1.2	1.7	2.4	2.9
RPM Range	770–1175	920–1303	1035–1466	733–949
Motor Frame Size	48	56	56	56
Fan Qty / Type	1 / Centrifugal	1 / Centrifugal	1 / Centrifugal	1 / Centrifugal
Fan Diameter (in)	10 x 10	10 x 10	10 x 10	15 x 15
High Static 3 phase				
Motor Qty / Drive Type	1 / Belt	1 / Belt	1 / Belt	1 / Belt
Max BHP	2.4	2.9	2.9	4.7
RPM Range	1035–1466	1208–1639	1303–1687	909–1102
Motor Frame Size	56	56	56	14
Fan Qty / Type	1 / Centrifugal	1 / Centrifugal	1 / Centrifugal	1 / Centrifugal
Fan Diameter (in)	10 x 10	10 x 10	10 x 10	15 x 15
Cond. Coil				
Material (Tube/Fin)	Cu / Al	Cu / Al	Cu / Al	Cu / Al
Coil type	3/8” RTPF	3/8” RTPF	3/8” RTPF	3/8” RTPF
Rows / FPI	2 / 17	2 / 17	2 / 17	2 / 17
Total Face Area (ft^2)	12.7	21.3	21.3	20.5
Cond. fan / motor				
Qty / Motor Drive Type	1/ Direct	1/ Direct	1/ Direct	2/ Direct
Motor HP / RPM	1/8 / 825	1/4 / 1100	1/4 / 1100	1/4 / 1100
Fan diameter (in)	22	22	22	22
Filters				
RA Filter # / Size (in)	2 / 16 x 25 x 2	4 / 16 x 16 x 2	4 / 16 x 16 x 2	4 / 16 x 20 x 2
OA inlet screen # / Size (in)	1 / 20 x 24 x 1	1 / 20 x 24 x 1	1 / 20 x 24 x 1	1 / 20 x 36 x 1

Table 9 – PHYSICAL DATA (HEATING) 3 – 6 TONS

UNIT: RGH	036	048	060	072
Gas Connection				
# of Gas Valves	1	1	1	1
Nat. gas supply line press (in. w.g.)/(PSIG)	4 –13 / 0.18 – 0.47	4 –13 / 0.18 – 0.47	4 –13 / 0.18 – 0.47	4 –13 / 0.18 – 0.47
Propane supply line press (in. w.g.)/(PSIG)	11 –13 / 0.40 – 0.47	11 –13 / 0.40 – 0.47	11 –13 / 0.40 – 0.47	11 –13 / 0.40 – 0.47
Heat Anticipator Setting (Amps)				
1st stage	0.14	0.14	0.14	0.14
2nd stage	0.14	0.14	0.14	0.14
Natural Gas, Propane Heat				
LOW # of stages / # of burners (total)	1 or 2 / 2	1 or 2 / 2	1 or 2 / 2	2 / 2
LOW Connection size	1/2” NPT	1/2” NPT	1/2” NPT	1/2” NPT
LOW Rollout switch opens / closes	195 / 115	195 / 115	195 / 115	195 / 115
LOW Temperature rise range (F)	25 – 55	25 – 55	20 – 55	15 – 55
MED # of stages / # of burners (total)	1 or 2 / 3	1 or 2 / 3	1 or 2 / 3	2 / 3
MED Connection size	1/2” NPT	1/2” NPT	1/2” NPT	1/2” NPT
MED Rollout switch opens / closes	195 / 115	195 / 115	195 / 115	195 / 115
MED Temperature rise range (F)	55 – 85	35 – 65	30 – 65	20 – 50
HIGH Connection size	–	1 or 2 / 3	1 or 2 / 3	2 / 4
HIGH # of stages / # of burners (total)	–	1/2” NPT	1/2” NPT	3/4” NPT
HIGH Rollout switch opens / closes	–	195 / 115	195 / 115	195 / 115
HIGH Temperature rise range (F)	–	50 – 80	40 – 80	30 – 60
Low NO_x Gas Heat				
LOW # of stages / # of burners (total)	1 or 2 / 2	1 or 2 / 2	1 or 2 / 2	–
LOW Connection size	1/2” NPT	1/2” NPT	1/2” NPT	–
LOW Rollout switch opens / closes	195 / 115	195 / 115	195 / 115	–
LOW Temperature rise range (F)	20 – 50	20 – 50	15 – 50	–
MED # of stages / # of burners (total)	1 or 2 / 3	1 or 2 / 3	1 or 2 / 3	–
MED Connection size	1/2” NPT	1/2” NPT	1/2” NPT	–
MED Rollout switch opens / closes	195 / 115	195 / 115	195 / 115	–
MED Temperature rise range (F)	30 – 60	30 – 60	25 – 60	–
				–
HIGH # of stages / # of burners (total)	–	1 or 2 / 3	1 or 2 / 3	–
HIGH Connection size	–	1/2” NPT	1/2” NPT	–
HIGH Rollout switch opens / closes	–	195 / 115	195 / 115	–
HIGH Temperature rise range (F)	–	40 – 70	35 – 70	–

Table 10 – PHYSICAL DATA (COOLING) 7.5 – 12.5 TONS

RGH	090	102	110	120	150
Refrigeration System					
# Circuits / # Comp. / Type	2 / 2 / Scroll	2 / 2 / Scroll	2 / 2 / Scroll	2 / 2 / Scroll	2 / 2 / Scroll
Refrig (R–410a) charge A/B (lbs–oz)	9 – 10 / 9 – 10	9 – 14 / 9 – 14	12 – 11 / 12 – 5	12 – 11 / 12 – 5	16 – 7 / 15 – 5
Hot Gas Reheat Refrig (R–410a) charge A/B (lbs–oz)	17 – 0 /17 – 0	15 – 2 /15 – 2	–	18 – 3 / 17 – 3	25 – 8 / 22 – 8
Metering device	TXV	TXV	TXV	TXV	TXV
High–press. Trip / Reset (psig)	630 / 505	630 / 505	630 / 505	630 / 505	630 / 505
Low–press. Trip / Reset (psig)	54 / 117	54 / 117	54 / 117	54 / 117	54 / 117
Compressor Capacity Staging (%)	50% / 100%	50% / 100%	50% / 100%	50% / 100%	50% / 100%
Evap. Coil					
Material (Tube/Fin)	Cu / Al	Cu / Al	Cu / Al	Cu / Al	Cu / Al
Coil type	3/8” RTPF	3/8” RTPF	3/8” RTPF	3/8” RTPF	3/8” RTPF
Rows / FPI	4 / 15	4 / 15	4 / 15	4 / 15	4 / 15
total face area (ft2)	11.1	11.1	11.1	11.1	17.5
Condensate drain conn. size	3/4”	3/4”	3/4”	3/4”	3/4”
Hot Gas Reheat Coil					
Material (Tube/Fin)	Cu / Al	Cu / Al	Cu / Al	Cu / Al	Cu / Al
Coil type	3/8” RTPF	3/8” RTPF	3/8” RTPF	3/8” RTPF	3/8” RTPF
Rows / FPI	1 / 17	2 / 17	2 / 17	2 / 17	2 / 17
total face area (ft2)	3.9	5.2	5.2	5.2	5.2
Evap. fan and motor					
Standard Static 3 phase					
Motor Qty / Drive type	1 / Belt	1 / Belt	1 / Belt	1 / Belt	1 / Belt
Max BHP	1.7	1.7	2.4	2.4	2.9
RPM range	518–733	518–733	591–838	591–838	440–609
motor frame size	56	56	56	56	56Y
Fan Qty / Type	1 / Centrifugal	1 / Centrifugal	1 / Centrifugal	1 / Centrifugal	1 / Centrifugal
Fan Diameter (in)	15 x 15	15 x 15	15 x 15	15 x 15	18 x 18
Medium Static 3 phase					
Motor Qty / Drive type	1 / Belt	1 / Belt	1 / Belt	1 / Belt	1 / Belt
Max BHP	2.4	2.4	3.7	3.7	3.7
RPM range	690–936	690–936	838–1084	838–1084	609–778
motor frame size	56	56	56HZ	56HZ	56HZ
Fan Qty / Type	1 / Centrifugal	1 / Centrifugal	1 / Centrifugal	1 / Centrifugal	1 / Centrifugal
Fan Diameter (in)	15 x 15	15 x 15	15 x 15	15 x 15	18 x 18
High Static 3 phase					
Motor Qty / Drive type	1 / Belt	1 / Belt	1 / Belt	1 / Belt	–
Max BHP	3.7	3.7	4.9	4.9	–
RPM range	838–1084	838–1084	1022–1240	1022–1240	–
motor frame size	56	56	145TY	145TY	–
Fan Qty / Type	1 / Centrifugal	1 / Centrifugal	1 / Centrifugal	1 / Centrifugal	–
Fan Diameter (in)	15 x 15	15 x 15	15 x 15	15 x 15	–
High Static–High Efficiency 3 phase*					
Motor Qty / Drive type	n/a	n/a	n/a	n/a	1 / Belt
Max BHP	n/a	n/a	n/a	n/a	6.1
RPM range	n/a	n/a	n/a	n/a	776–955
motor frame size	n/a	n/a	n/a	n/a	S184T
Fan Qty / Type	n/a	n/a	n/a	n/a	1 / Centrifugal
Fan Diameter (in)	n/a	n/a	n/a	n/a	18 x 18
Cond. Coil					
Material (Tube/Fin)	Cu / Al	Cu / Al	Cu / Al	Cu / Al	Cu / Al
Coil type	3/8” RTPF	3/8” RTPF	3/8” RTPF	3/8” RTPF	3/8” RTPF
Rows / FPI	2 / 17	2 / 17	3 / 17	3 / 17	2 / 17
Total Face Area (ft^2)	25.1	25.1	25.1	25.1	2 at 23.1
Cond. fan / motor					
Qty / Motor drive type	2 / direct	2 / direct	1 / direct	1 / direct	3 / direct
Motor HP / RPM	1/4 / 1100	1/4 / 1100	1 / 1175	1 / 1175	1/4 / 1100
Fan diameter (in)	22	22	30	30	22
Filters					
RA Filter # / size (in)	4 / 20 x 20 x 2	4 / 20 x 20 x 2	4 / 20 x 20 x 2	4 / 20 x 20 x 2	6 / 18 x 24 x 2 Vert 2 / 24 x 27 x 1
OA inlet screen # / size (in)	1 / 20 x 24 x 1	1 / 20 x 24 x 1	1 / 20 x 24 x 1	1 / 20 x 24 x 1	Horz 1 / 30 x 39 x 1

Table 11 – PHYSICAL DATA (HEATING) 7.5 – 12.5 TONS

RGH	090	102	110 / 120	150
Gas Connection				
# of Gas Valves	1	1	1	1
Nat. gas supply line press (in. w.g.)/(PSIG)	4 –13 / 0.18 – 0.47	4 –13 / 0.18 – 0.47	4 –13 / 0.18 – 0.47	5 –13 / 0.18 – 0.47
Propane supply line press (in. w.g.)/(PSIG)	11 –13 / 0.40 – 0.47	11 –13 / 0.40 – 0.47	11 –13 / 0.40 – 0.47	11 –13 / 0.40 – 0.47
Heat Anticipator Setting (Amps)				
1st stage	0.14	0.14	0.14	0.14
2nd stage	0.14	0.14	0.14	0.14
Natural Gas, Propane Heat				
LOW # of stages / # of burners (total)	2 / 3	2 / 3	2 / 4	2 / 5
LOW Connection size	1/2” NPT	1/2” NPT	3/4” NPT	3/4” NPT
LOW Rollout switch opens / closes	195 / 115	195 / 115	195 / 115	225 / 145
LOW Temperature rise range (F)	20 – 50	20 – 50	25 – 65	15 – 60
MED # of stages / # of burners (total)	2 / 4	2 / 4	2 / 5	2 / 6
MED Connection size	3/4” NPT	3/4” NPT	3/4” NPT	3/4” NPT
MED Rollout switch opens / closes	195 / 115	195 / 115	195 / 115	225 / 145
MED Temperature rise range (F)	35 – 65	30 – 65	30 – 65	20 – 55
HIGH # of stages / # of burners (total)	2 / 5	2 / 5	2 / 5	2 / 8
HIGH Connection size	3/4” NPT	3/4” NPT	3/4” NPT	3/4” NPT
HIGH Rollout switch opens / closes	195 / 115	195 / 115	195 / 115	225 / 145
HIGH Temperature rise range (F)	45 – 75	40 – 75	35 – 70	25 – 60

BASE UNIT DIMENSIONS – RGH036–060

NOTES:

1. DIMENSIONS ARE IN INCHES, DIMENSIONS IN [ ] ARE IN MILLIMETERS.
2. CENTER OF GRAVITY
3. DIRECTION OF AIRFLOW

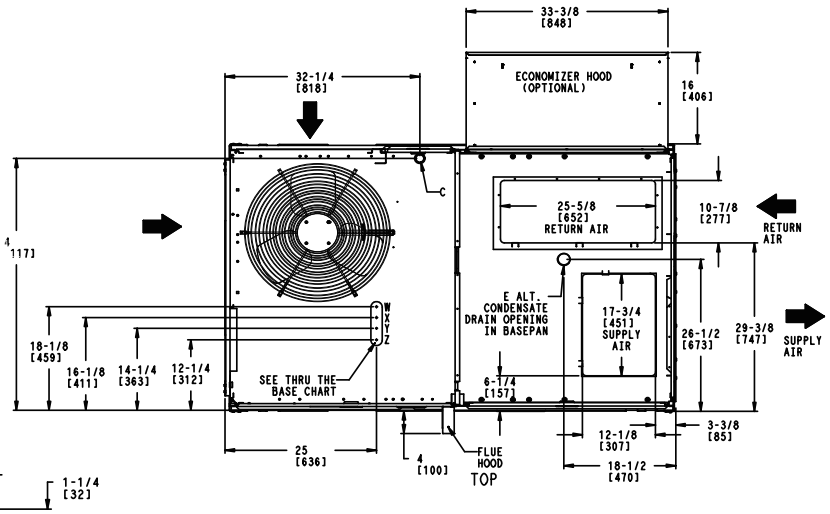

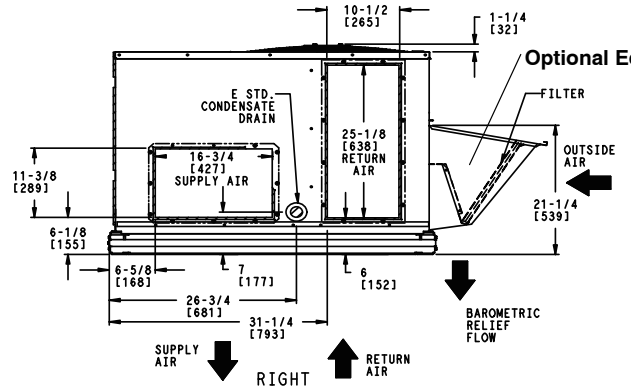

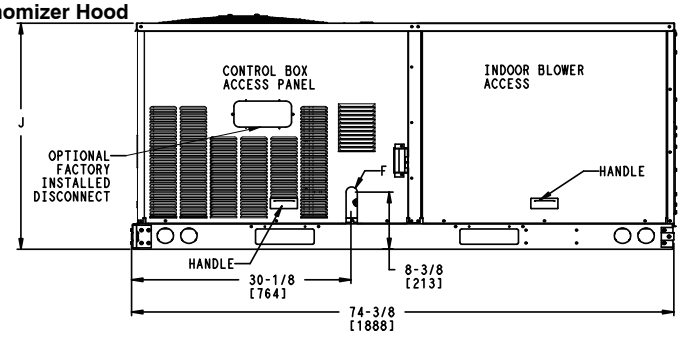

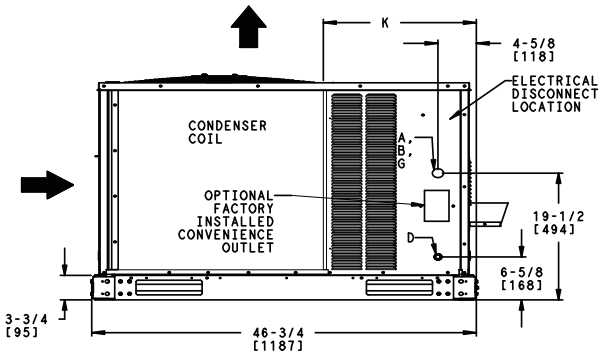

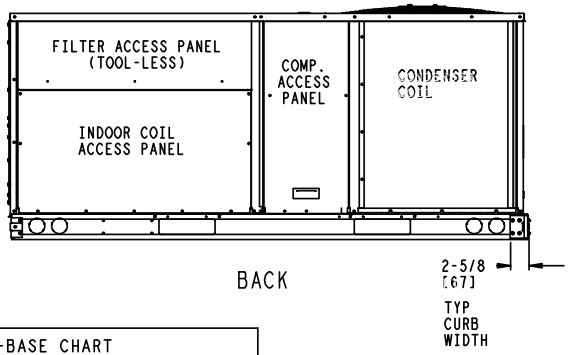

	CONNECTION SIZES
A	1 3/8" [35] DIA FIELD POWER SUPPLY HOLE
B	2" [50] DIA POWER SUPPLY KNOCKOUT
C	1 3/4" [51] DIA GAUGE ACCESS PLUG
D	7/8" [22] DIA FIELD CONTROL WIRING HOLE
E	3/4"-14 NPT CONDENSATE DRAIN
F	1/2"-14 NPT GAS CONNECTION
G	2 1/2 " [64] DIA POWER SUPPLY KNOCK-OUT

THRU-THE-BASE CHART
THESE HOLES REQUIRED FOR USE
CRBTMPWR001A01, 003A01

	THREADED CONDUIT SIZE	WIRE USE	REQ'D HOLE SIZES (MAX.)
W	1/2"	ACC.	7/8" [22.2]
X	1/2"	24V	7/8" [22.2]
Y *	3/4" (001,003)	POWER	1 1/8" [28.4]
Z**	(003) 1/2" FPT	GAS	1 3/16" [30.0]
	FOR "THRU-THE-BASEPAN" FACTORY OPTION, FITTINGS FOR ONLY X,Y, & Z ARE PROVIDED		
*	SELECT EITHER 3/4" OR 1/2" FOR POWER, DEPENDING ON WIRE SIZE		
**	(001) PROVIDES 3/4" FPT THRU CURB FLANGE & FITTING.		

UNIT	J	K
036	33 3/8 [847]	18 5/8 [472]
048	41 3/8 [1051]	14 7/8 [377]
060	41 3/8 [1051]	14 7/8 [377]

WEIGHT & CLEARANCE DIMENSIONS – RGH036–060 (cont.)

UNIT	BASE UNIT WEIGHT		Corner Weight A		Corner Weight B		Corner Weight C		Corner Weight D		Center of Gravity In [mm]		
	LBS	KG	LBS	KG	LBS	KG	LBS	KG	LBS	KG	X	Y	Z
RGH036	505	229	124	56	117	53	128	58	136	62	36–1/8 [918]	24–3/8 [619]	19 [483]
RGH048	590	268	151	69	144	65	144	65	151	69	36–1/4 [921]	23–3/8 [594]	20–1/8 [511]
RGH060	600	271	156	71	145	66	144	65	155	70	35–7/8 [911]	23–1/4 [591]	19–1/2 [495]

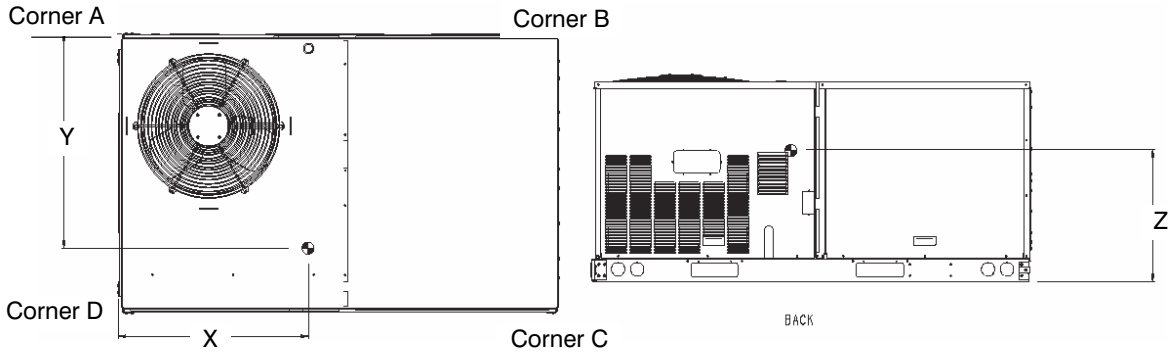

UNIT CLEARANCES

LOC	DIMENSION	CONDITION
A	48” (1219 mm)	Unit disconnect is mounted on panel
	18” (457 mm)	No disconnect, convenience outlet option
	18” (457 mm)	Recommended service clearance
	12” (305 mm)	Minimum clearance
B	42” (1067 mm)	Surface behind servicer is grounded (e.g., metal, masonry wall)
	36” (914 mm)	Surface behind servicer is electrically non–conductive (e.g., wood, fiberglass)
	Special	Check for sources of flue products within 10–ft of unit fresh air intake hood
C	36” (914 mm)	Side condensate drain is used
	18” (457 mm)	Minimum clearance
D	48” (1219 mm)	No flue discharge accessory installed, surface is combustible material
	42” (1067 mm)	Surface behind servicer is grounded (e.g., metal, masonry wall, another unit)
	36” (914 mm)	Surface behind servicer is electrically non–conductive (e.g., wood, fiberglass)
	Special	Check for adjacent units or building fresh air intakes within 10–ft of this unit’s flue outlet

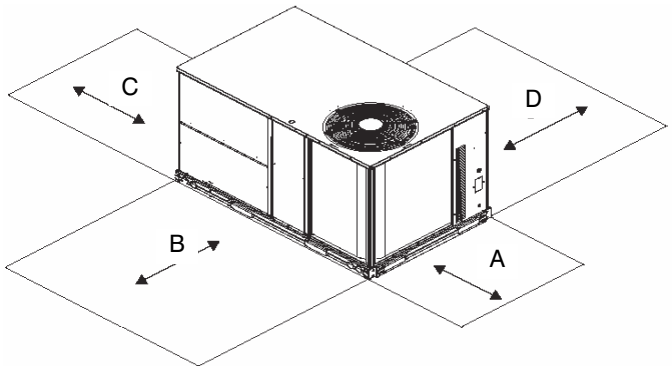

ROOF CURB DETAILS – RGH036–060

RoofCurb Accessory	A	Unit Size
CRRFCURB001A01	1’ 2 “ [356]	RGH036–060
CRRFCURB002A01	2’ 0” [610]	

NOTES:
1. Roofcurb accessory is shipped disassembled.
2. Insulated panels, 1” thick polyurethane foam, 1–3/4# density.
3. Dimensions in. [ ] in millimeters.
4. Roofcurb 16ga steel.
5. Attach ductwork to curb (Flanges of duct rest on curb)
6. Service clearance 4’ on each side.
7. ⇨ Direction of airflow.
8. Connector pkg. CRBTMPWR001A01 is for thru–the–curb connections. Pkg. CRBTMPWR003A01 is for thru–the–bottom connections.

Connector Pkg. Acc.	B	C	D Alt. Drain Hole	Gas	Power	Control	Accessory Power
CRBTMPWR001A01	1’ 9–11/16” [551]	1’ 4” [406]	1l–3/4” [44.5]	3/4” [19] NPT	3/4” [19] NPT	1/2” [12.7] NPT	1/2” [12.7] NPT
CRBTMPWR003A01				1/2” [12.7] NPT			

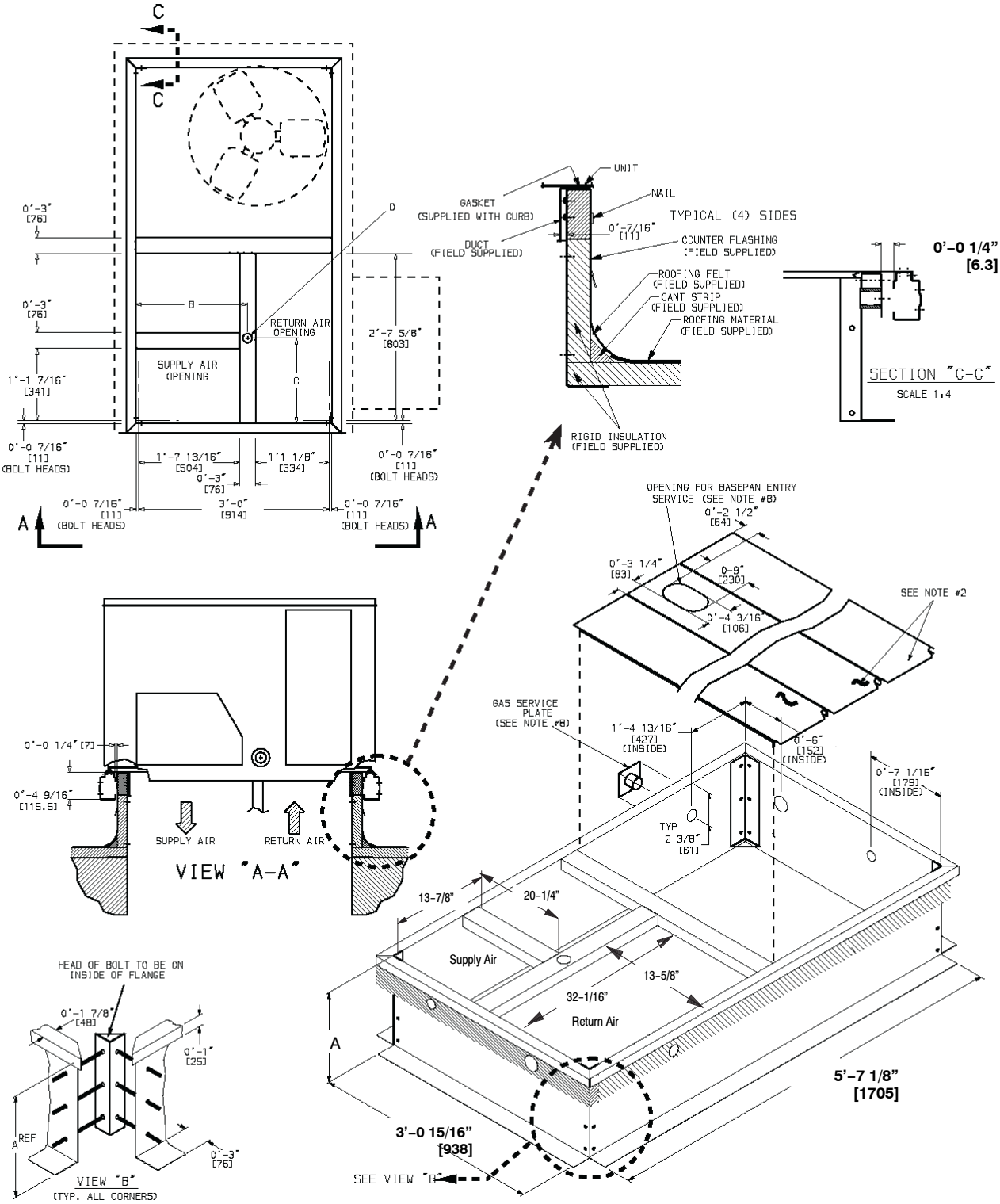

Specifications subject to change without notice.

BASE UNIT DIMENSIONS – RGH072–102

NOTES:

1. DIMENSIONS ARE IN INCHES, DIMENSIONS IN [ ] ARE IN MILLIMETERS.
2. CENTER OF GRAVITY
3. DIRECTION OF AIR FLOW

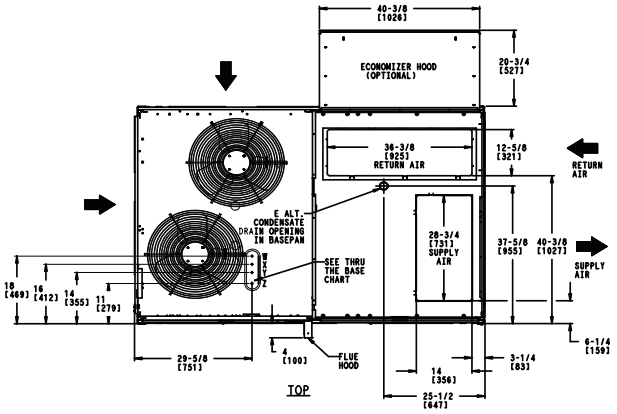

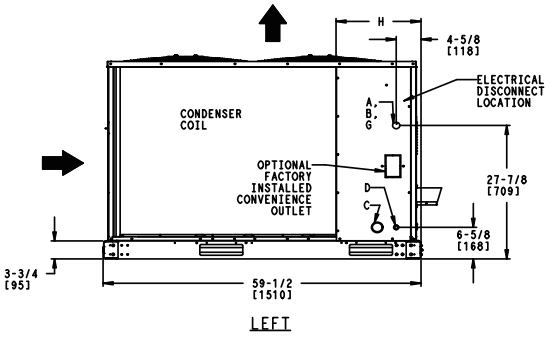

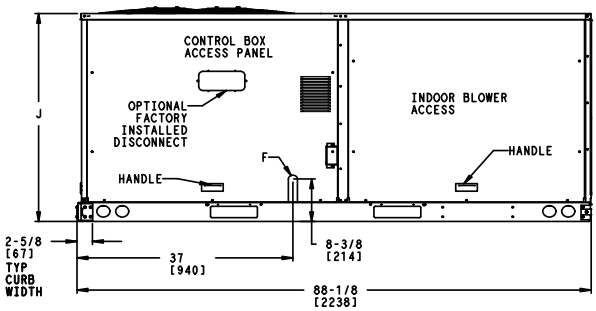

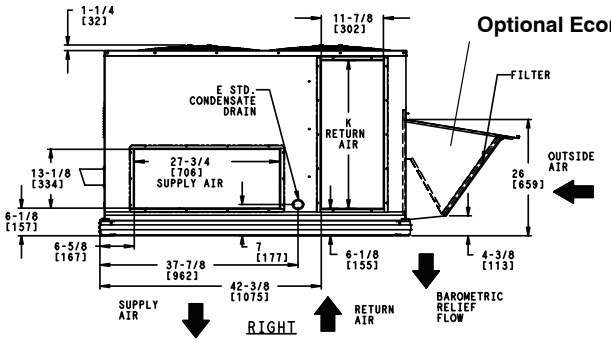

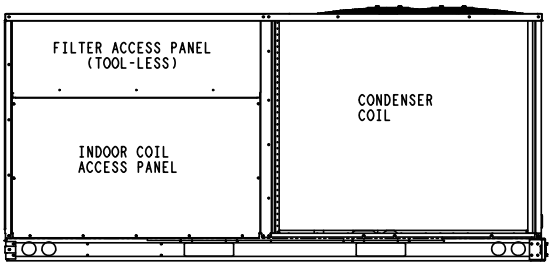

CONNECTION SIZES	
A	1 3/8" [35] DIA FIELD POWER SUPPLY HOLE
B	2 1/2" [64] DIA POWER SUPPLY KNOCKOUT
C	1 3/4" [51] DIA GAUGE ACCESS PLUG
D	7/8" [22] DIA FIELD CONTROL WIRING HOLE
E	3/4"-14 NPT CONDENSATE DRAIN
F	1/2"-14 NPT GAS CONNECTION 3/4"-14 NPT GAS CONNECTION
G	2 " [51] DIA POWER SUPPLY KNOCK-OUT

THRU-THE-BASE CHART (FIELD INST)

THESE HOLES REQUIRED FOR USE WITH ACCY KITS:
CRBTMPWR001A01: 072 - GAS THRU CURB
CRBTMPWR002A01: 090, 102 - GAS THRU CURB
CRBTMPWR003A01: 072 - GAS THRU BASEPAN
CRBTMPWR004A01: 090, 102 - GAS THRU BASEPAN

	THREADED CONDUIT SIZE	WIRE USE	REQ'D HOLE SIZES (MAX.)
W	1/2"	ACC.	7/8" [22.2]
X	1/2"	24V	7/8" [22.2]
Y	3/4" (001,003) 1 1/4" (002,004)	POWER	1 1/8" [28.6] 1 3/4" [44.4]
Z *	(003) 1/2" FPT (004) 3/4" FPT	GAS	1 1/8" [28.6] 1 3/4" [44.4]
*	(001 & 002) PROVIDES 3/4" FPT THRU CURB FLANGE & FITTING. HOLE SIZE: 2" [50.8]		

UNIT	J	K	H
072	41 1/4 [1048]	33 [658]	15 7/8 [403]
090	49 3/8 [1253]	36 3/8 [925]	15 7/8 [403]
102	49 3/8 [1253]	36 3/8 [925]	15 7/8 [403]

THRU-THE-BASE CHART (FIOP)

FOR "THRU-THE-BASEPAN" FACTORY OPTION, FITTINGS FOR ONLY X, Y, & Z ARE PROVIDED. **

**	FOR BELOW LISTED MODELS, A FIELD SUPPLIED 1/2" ADAPTER IS REQUIRED BETWEEN BASE PAN FITTING AND GAS VALVE: RGH072 (low & medium heat models) RGH090, 102 (low heat models)

WEIGHT & CLEARANCE DIMENSIONS – RGH072–102 (cont.)

UNIT	BASE UNIT WEIGHT		Corner Weight A		Corner Weight B		Corner Weight C		Corner Weight D		Center of Gravity In [mm]		
	LBS	KG	LBS	KG	LBS	KG	LBS	KG	LBS	KG	X	Y	Z
RGH072	765	347	165	75	153	69	215	97	232	105	42–3/8 [1076]	34–3/4 [883]	19–7/8 [505]
RGH090	925	420	204	93	191	87	256	116	274	124	42–5/8 [1082]	34–1/8 [867]	22–7/8 [581]
RGH102	925	420	204	93	191	87	256	116	274	124	42–5/8 [1082]	34–1/8 [867]	22–7/8 [581]

STANDARD UNIT WEIGHT IS WITHOUT MAX GAS HEAT & WITHOUT PACKAGING

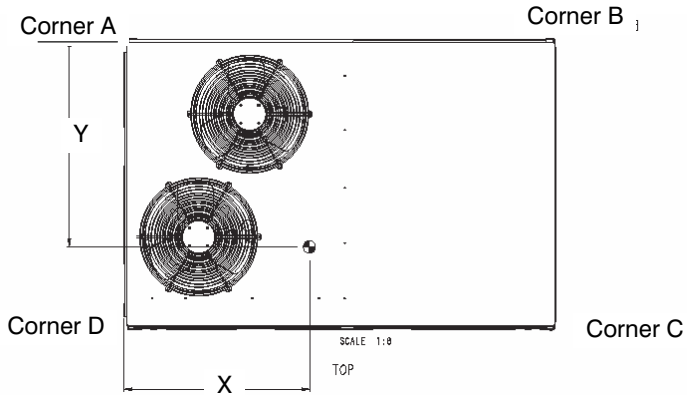

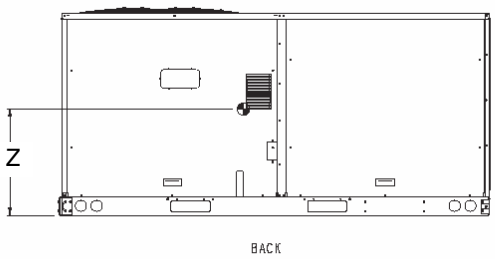

UNIT CLEARANCES

LOC	DIMENSION	CONDITION
A	48” (1219 mm)	Unit disconnect is mounted on panel
	36” (914 mm)	If dimension–B is 12”
	18” (457 mm)	No disconnect, convenience outlet option
	18” (457 mm)	Recommended service clearance (use electric screwdriver)
	12” (305 mm)	Minimum clearance (use manual ratchet screwdriver)
B	36” (914 mm)	Unit has economizer
	12” (305 mm)	If dimension–A is 36”
	Special	Check for sources of flue products within 10–ft of unit fresh air intake hood
C	36” (914 mm)	Side condensate drain is used
	18” (457 mm)	Minimum clearance
D	48” (1219 mm)	No flue discharge accessory installed, surface is combustible material
	42” (1067 mm)	Surface behind servicer is grounded (e.g., metal, masonry wall, another unit)
	36” (914 mm)	Surface behind servicer is electrically non–conductive (e.g., wood, fiberglass)
	Special	Check for adjacent units or building fresh air intakes within 10–ft of this unit’s flue outlet

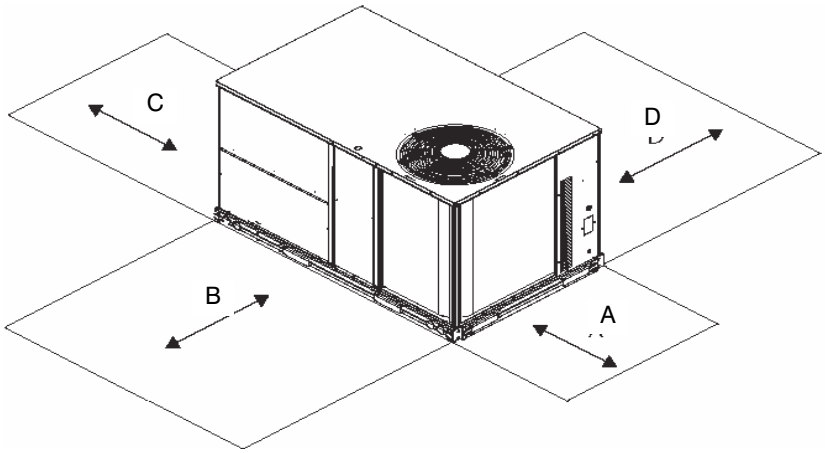

BASE UNIT DIMENSIONS – RGH110/120

NOTES:

1. DIMENSIONS ARE IN INCHES, DIMENSIONS IN [ ] ARE IN MILLIMETERS.
2. CENTER OF GRAVITY
3. DIRECTION OF AIRFLOW

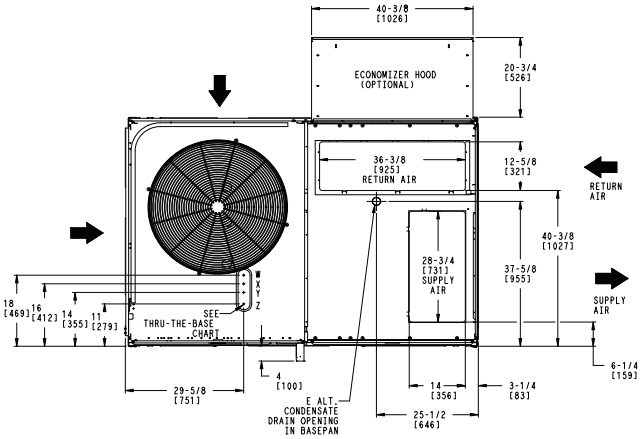

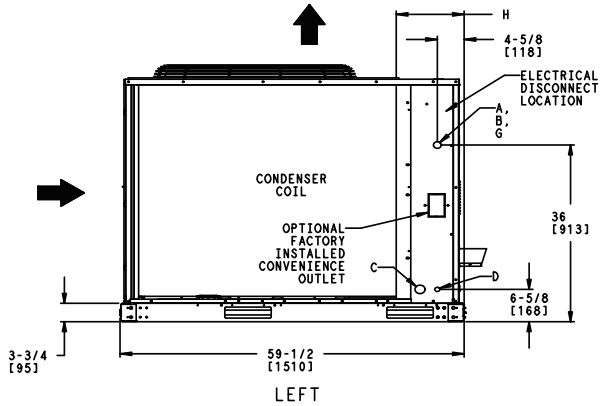

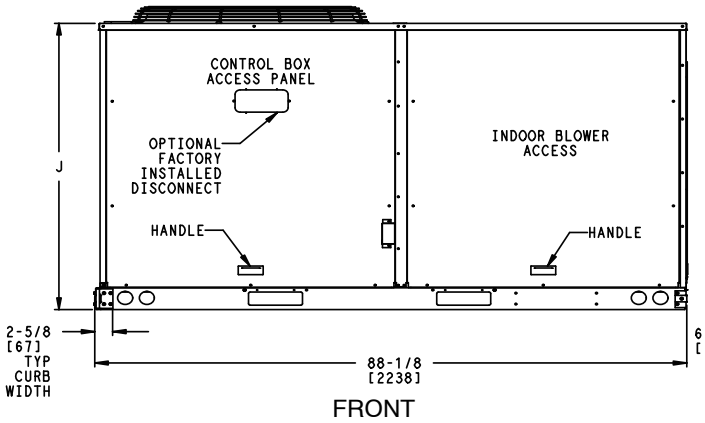

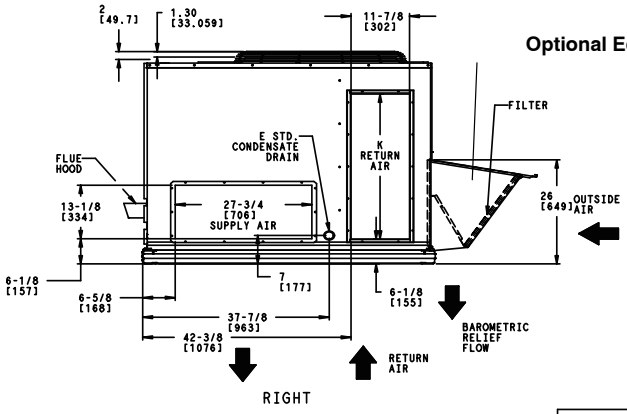

Optional Economizer Hood

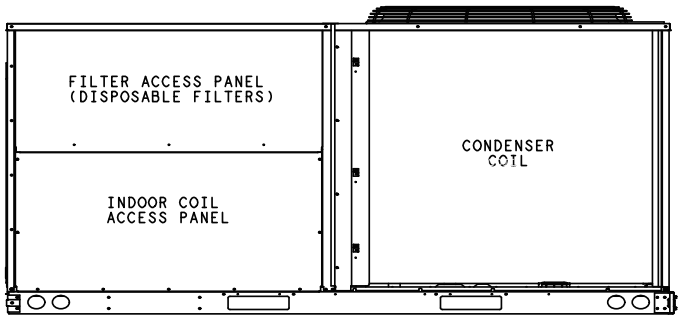

A	1–3/8" [35] DIA FIELD POWER SUPPLY HOLE
B	2–1/2" [64] DIA POWER SUPPLY KNOCKOUT
C	1–3/4" [51] DIA GAUGE ACCESS PLUG
D	7/8" [22] DIA FIELD CONTROL WIRING HOLE
F	3/4" –14 NPT CONDENSATE DRAIN
E	3/4" –14 NPT GAS CONNECTION
G	2" [51] DIA POWER SUPPLY KNOCK–OUT

THRU-THE-BASE CHART
THESE HOLES REQUIRED FOR USE
CRBTMPWR002A01,004A01

	THREADED CONDUIT SIZE	WIRE USE	REQ'D HOLE SIZES (MAX.)
W	1/2"	ACC.	7/8" [22.2]
X	1/2"	24V	7/8" [22.2]
Y	1 1/4" (002,004)	POWER	1 3/4" [44.4]
Z*	(004) 3/4" FPT	GAS	1 5/8" [41.3]
	FOR "THRU-THE-BASEPAN" FACTORY OPTION, FITTINGS FOR ONLY X, Y, & Z ARE PROVIDED		
*	(002) PROVIDES 3/4" FPT THRU CURB FLANGE & FITTING.		

UNIT	H	J	K
RGH110 RGH120	11 3/8 [289]	49 3/8 [1253]	36-3/8 [925]

WEIGHT & CLEARANCE DIMENSIONS – RGH110/120 (cont.)

UNIT	BASE UNIT WEIGHT		Corner Weight A		Corner Weight B		Corner Weight C		Corner Weight D		Center of Gravity In [mm]		
	LBS	KG	LBS	KG	LBS	KG	LBS	KG	LBS	KG	X	Y	Z
RGH110	1099	499	337	153	307	139	217	98	238	108	42 [1076]	24–5/8 [626]	23 [564]
RGH120	1099	499	337	153	307	139	217	98	238	108	42 [1076]	24–5/8 [626]	23 [564]

STANDARD UNIT WEIGHT IS WITHOUT MAX GAS HEAT & WITHOUT PACKAGING

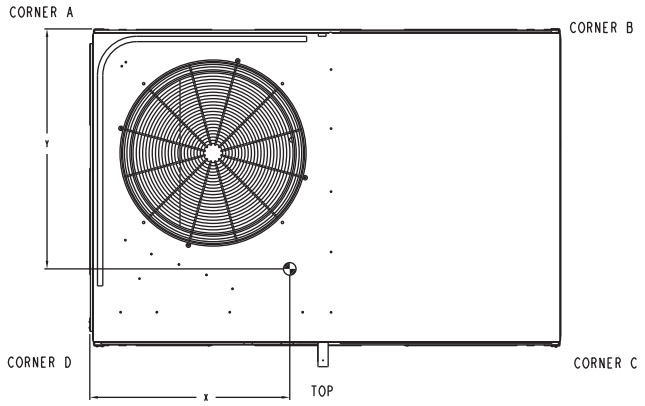

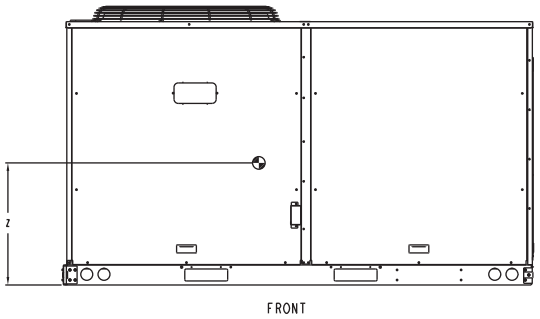

UNIT CLEARANCES

LOC	DIMENSION	CONDITION
A	48” (1219 mm)	Unit disconnect is mounted on panel
	18” (457 mm)	No disconnect, convenience outlet option
	18” (457 mm)	Recommended service clearance
	12” (305 mm)	Minimum clearance
B	42” (1067 mm)	Surface behind servicer is grounded (e.g., metal, masonry wall)
	36” (914 mm)	Surface behind servicer is electrically non–conductive (e.g., wood, fiberglass)
	Special	Check for sources of flue products within 10–ft of unit fresh air intake hood
C	36” (914 mm)	Side condensate drain is used
	18” (457 mm)	Minimum clearance
D	48” (1219 mm)	No flue discharge accessory installed, surface is combustible material
	42” (1067 mm)	Surface behind servicer is grounded (e.g., metal, masonry wall, another unit)
	36” (914 mm)	Surface behind servicer is electrically non–conductive (e.g., wood, fiberglass)
	Special	Check for adjacent units or building fresh air intakes within 10–ft of this unit’s flue outlet

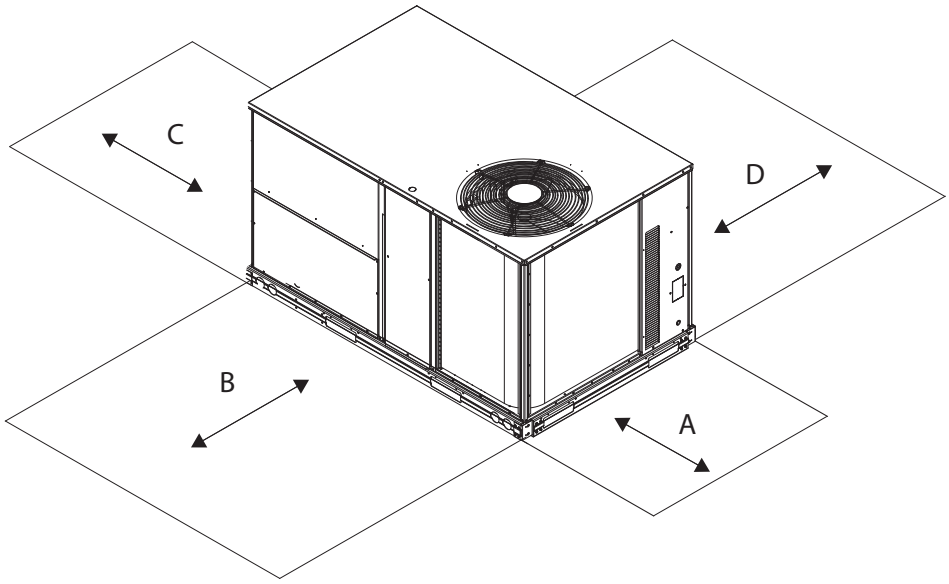

ROOF CURB DETAILS – RGH072–120

RoofCurb Accessory	A	Unit Size
CRRFCURB003A01	14 " [356]	RGH072/120
CRRFCURB004A01	24" [610]	

Connector Pkg. Acc.	Gas	Power	Control	Accessory Power
CRBTMPWR002A01	3/4" [19] NPT	1–1/4" [31.7] NPT	1/2" [12.7] NPT	1/2" [12.7] NPT
CRBTMPWR004A01				

NOTES:
1. **Roofcurb accessory is shipped disassembled.**
2. **Insulated panels, 1" thick polyurethane foam, 1–3/4# density.**
3. **Dimensions in. [ ] in millimeters.**
4. **Roofcurb 16ga steel.**
5. **Attach ductwork to curb (Flanges of duct rest on curb)**
6. **Service clearance 4' on each side.**
7. **⇨ Direction of airflow.**
8. **Connector pkg. CRBTMPWR002A01 is for thru–the–curb connections. Pkg. CRBTMPWR004A01 is for thru–the–bottom connections.**

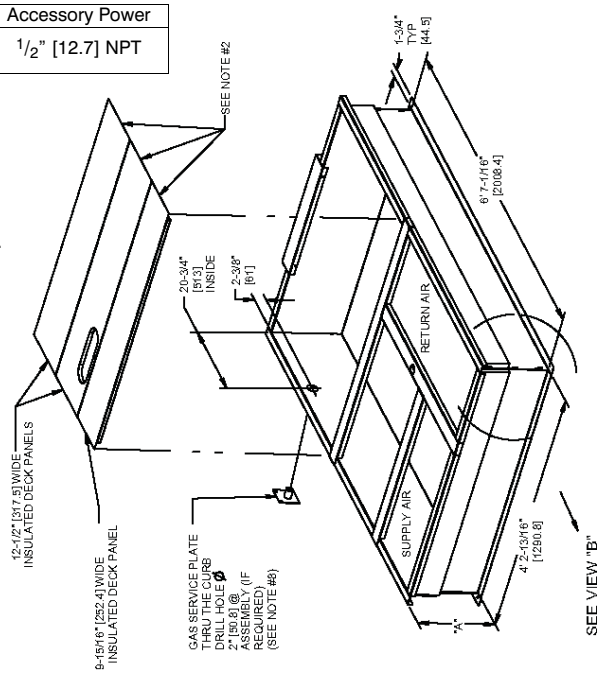

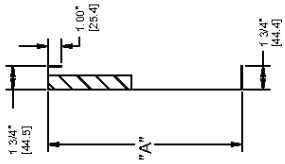

SECTION THRU SIDE

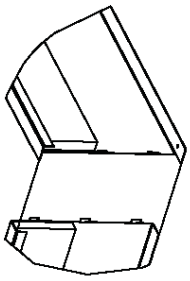

VIEW "B"
CORNER DETAIL

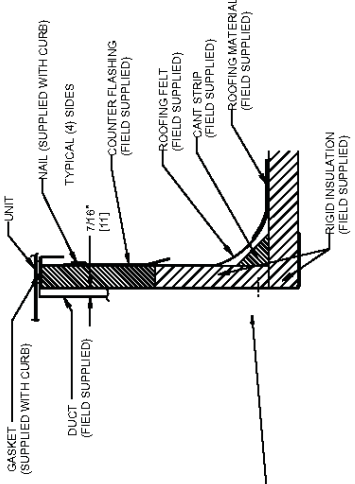

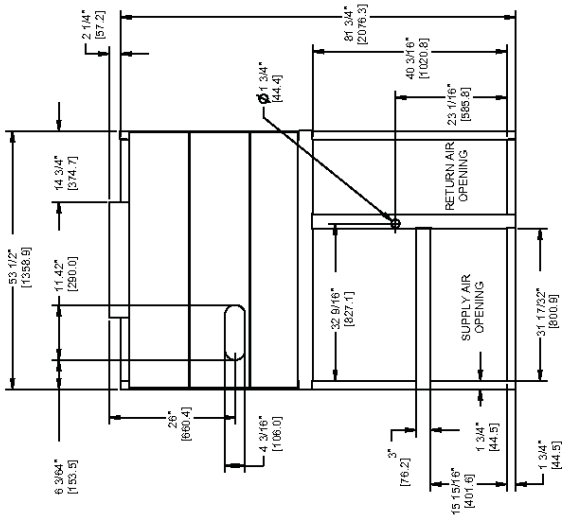

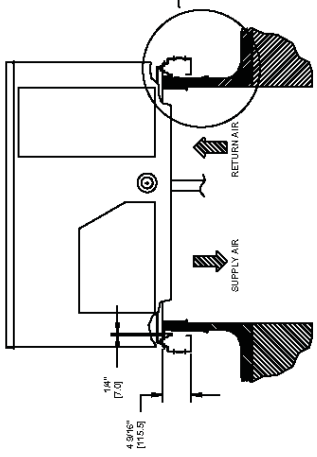

BASE UNIT DIMENSIONS – RGH150

NOTES:

1. DIMENSIONS ARE IN INCHES, DIMENSIONS IN [ ] ARE IN MILLIMETERS.
2. CENTER OF GRAVITY
3. DIRECTION OF AIR FLOW

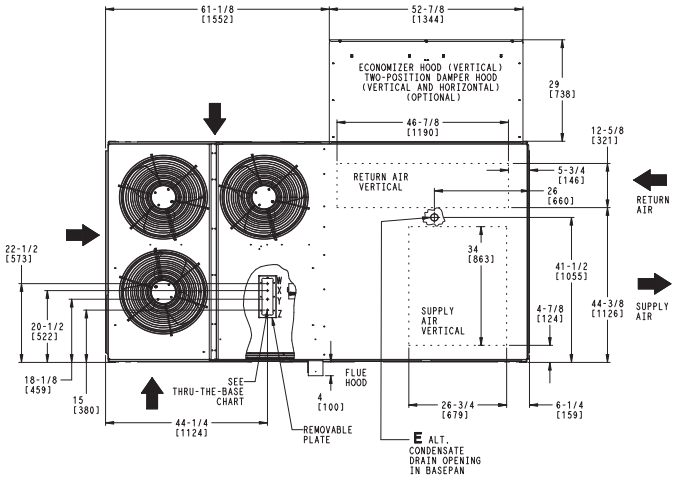

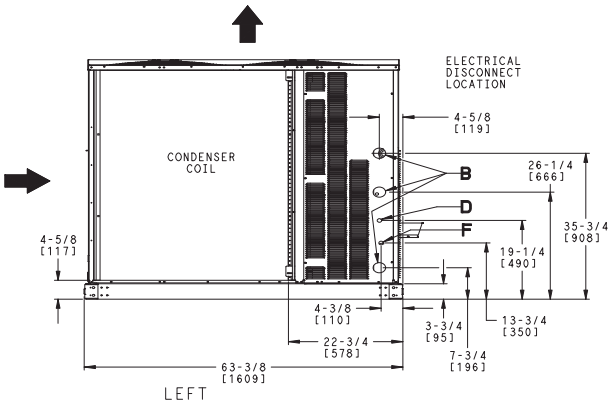

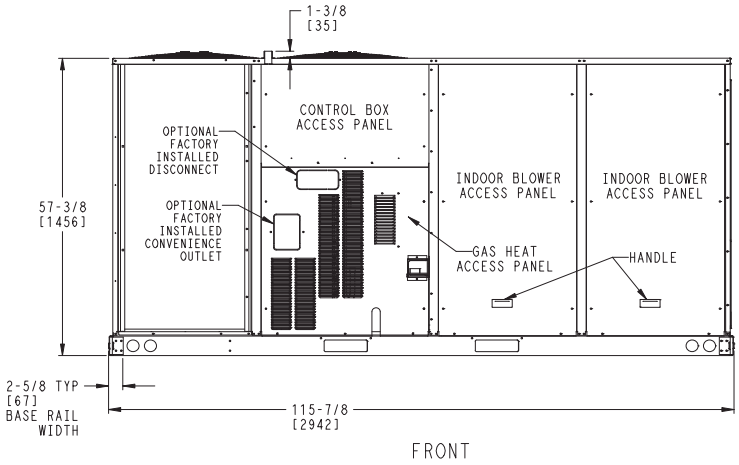

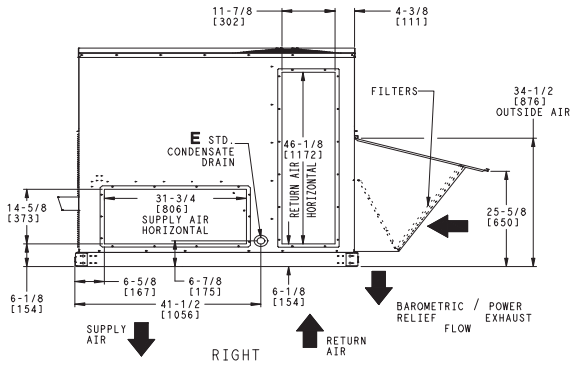

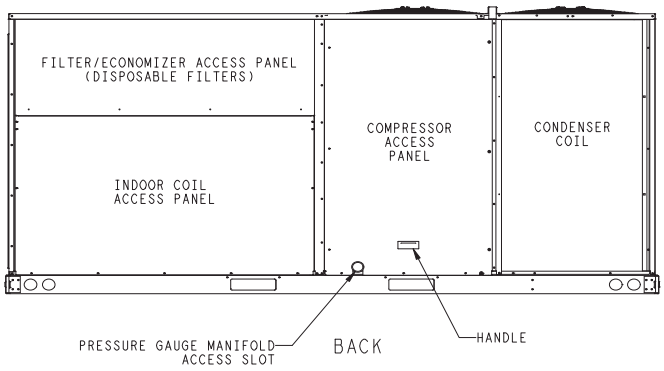

	CONNECTION SIZES
B	2 1/2" [64] DIA POWER SUPPLY HOLE
D	7/8" [22] DIA FIELD CONTROL WIRING HOLE
E	3/4"-14 NPT CONDENSATE DRAIN
F	7/8" [22] DIA FIELD CONVENIENCE OUTLET HOLE

THRU-THE-BASE CHART THESE HOLES REQUIRED FOR USE CRBTMPWR005A00,006A00,007A00				
ACCESSORY NO.		THREADED CONDUIT SIZE	WIRE USE	REQ'D HOLE SIZES (MAX.)
005	W	1/2"	ACC.	7/8" [22.2]
	X	1/2"	24V	7/8" [22.2]
	Y	1 1/4"	POWER	1 1/2" [38.1]
	Z	3/4" PIPE	GAS	1 3/4" [44.5]
006	W	1/2"	ACC.	7/8" [22.2]
	X	1/2"	24V	7/8" [22.2]
	Y	1 1/2"	POWER	2" [50.8]
	Z	3/4" PIPE	GAS	1 3/4" [44.5]
007	W	1/2"	ACC.	7/8" [22.2]
	X	1/2"	24V	7/8" [22.2]
	Y	2"	POWER	2 1/2" [63.5]
	Z	3/4" PIPE	GAS	1 3/4" [44.5]
	FOR "THRU-THE-BASEPAN" FACTORY OPTION, FITTINGS FOR X & Y ARE PROVIDED AS SPECIFIED ON "006".			

WEIGHT & CLEARANCE DIMENSIONS – RGH150 (cont.)

UNIT	BASE UNIT WEIGHT		Corner Weight A		Corner Weight B		Corner Weight C		Corner Weight D		Center of Gravity In [mm]		
	LBS	KG	LBS	KG	LBS	KG	LBS	KG	LBS	KG	X	Y	Z
RGH150	1430	649	342	155	377	171	372	169	338	153	60–3/4 [1543]	31–1/2 [800]	20–5/8 [524]

STANDARD UNTT WETGHT TS WTTHOUT MAX GAS HEAT & WTTHOUT PACKAGTNG

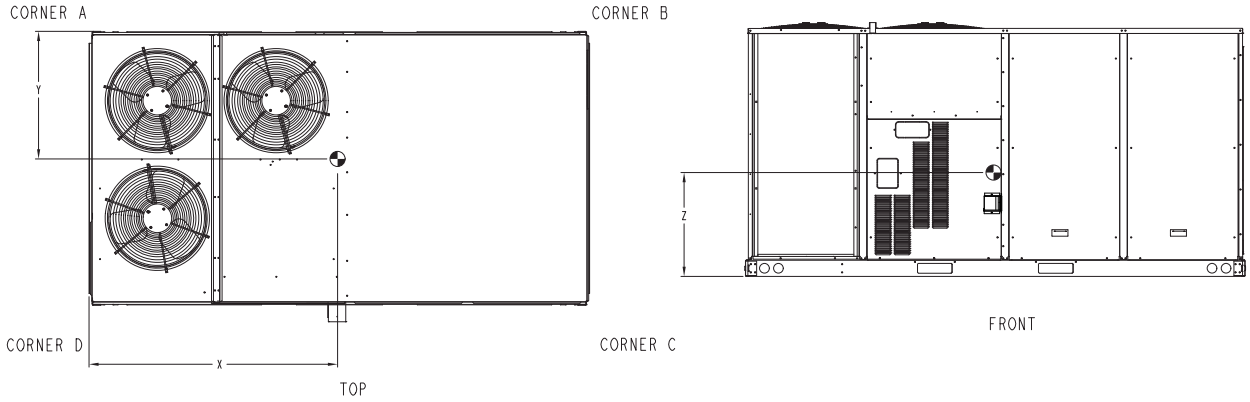

UNIT CLEARANCES

LOC	DIMENSION	CONDITION
A	48” (1219 mm)	Unit disconnect is mounted on panel
	18” (457 mm)	No disconnect, convenience outlet option
	18” (457 mm)	Recommended service clearance
	12” (305 mm)	Minimum clearance
B	42” (1067 mm)	Surface behind servicer is grounded (e.g., metal, masonry wall)
	36” (914 mm)	Surface behind servicer is electrically non–conductive (e.g., wood, fiberglass)
	Special	Check for sources of flue products within 10–ft of unit fresh air intake hood
C	36” (914 mm)	Side condensate drain is used
	18” (457 mm)	Minimum clearance
D	48” (1219 mm)	No flue discharge accessory installed, surface is combustible material
	42” (1067 mm)	Surface behind servicer is grounded (e.g., metal, masonry wall, another unit)
	36” (914 mm)	Surface behind servicer is electrically non–conductive (e.g., wood, fiberglass)
	Special	Check for adjacent units or building fresh air intakes within 10–ft of this unit’s flue outlet

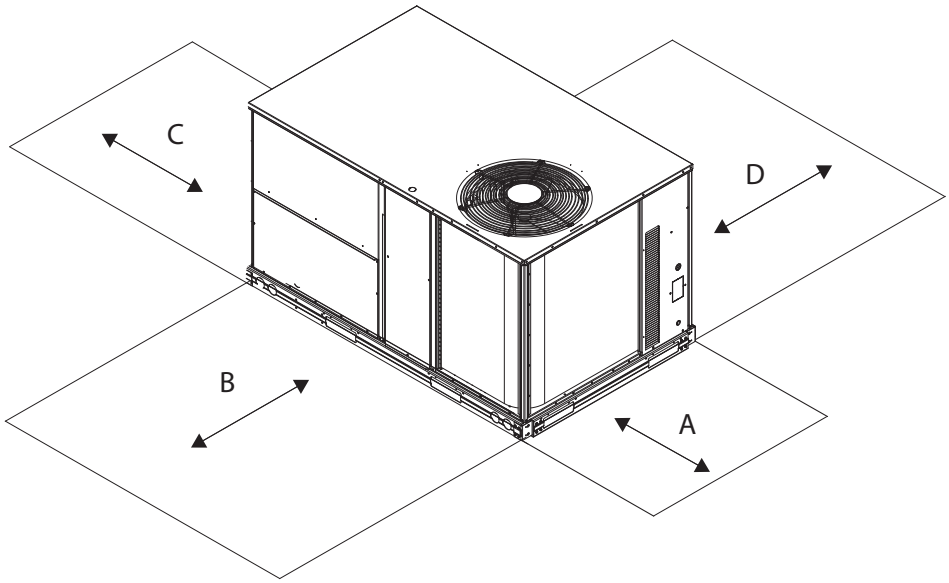

ROOF CURB DETAILS – RGH150

RoofCurb Accessory	A	Unit Size
CRRFCURB074A00	14 “ [356]	RGH150
CRRFCURB075A00	24” [610]	

NOTES:
1. ROOFCURB ACCESSORY IS SHIPPED DISASSEMBLED.
2. INSULATED PANELS: 1/2" THK. NEOPRENE FOAM, 1.0# DENSITY.
3. DIMENSIONS IN [ ] ARE IN MILLIMETERS.
4. ROOFCURB SIDEWALLS: 16 GAGE STEEL.
5. ATTACH DUCTWORK TO CURB. (FLANGES OF DUCT REST ON CURB).
6. SERVICE CLEARANCE 4 FT ON EACH SIDE.
7. ➡ DIRECTION OF AIR FLOW.
8. "L" & "S" DESIGNATIONS DENOTE LOCATION OF COMMON CROSS RAIL. (POSITION "L" FOR LARGE DUCT OPENING CURB).

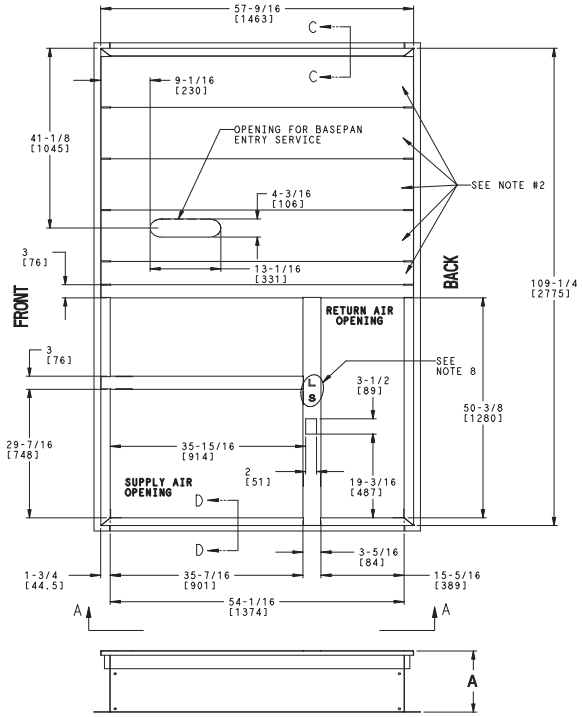

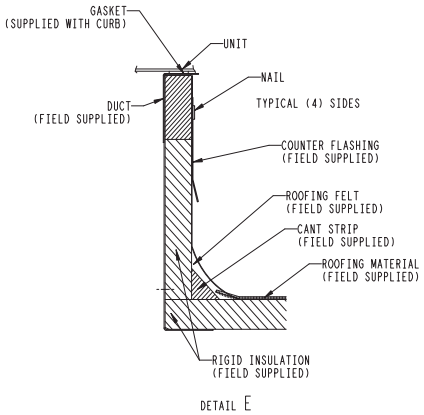

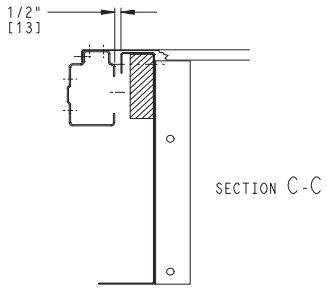

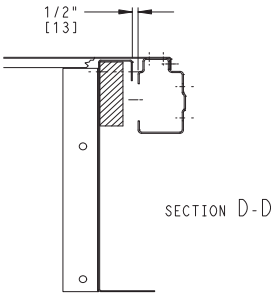

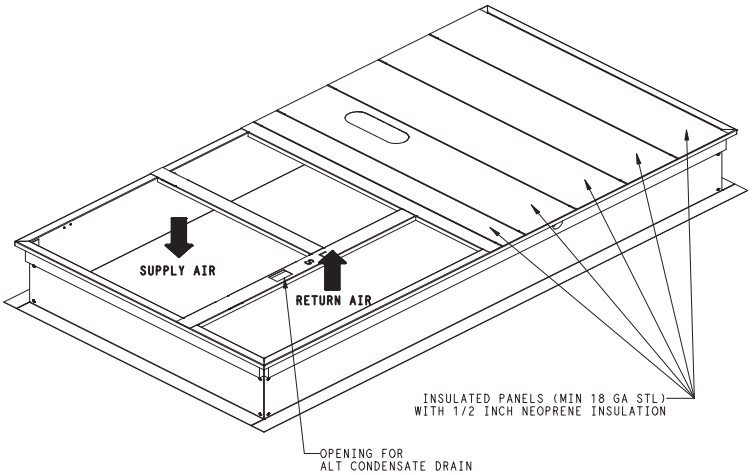

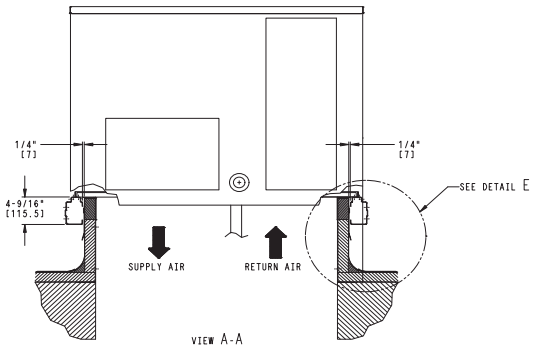

OPTIONS & ACCESSORY WEIGHTS

OPTION / ACCESSORY	OPTION / ACCESSORY WEIGHTS															
	036		048		060		072		090		102		110/120		150	
	lb	kg	lb	kg	lb	kg	lb	kg	lb	kg	lb	kg	lb	kg	lb	kg
Hot Gas Reheat	15	7	23	10	25	11	29	13	38	17	47	21	47	21	57	26
Power Exhaust – vertical	50	23	50	23	50	23	50	23	75	34	75	34	75	34	85	39
Power Exhaust – horizontal	30	14	30	14	30	14	30	14	30	14	30	14	30	14	75	34
Economizer	50	23	50	23	50	23	50	23	75	34	75	34	75	34	115	52
Two Position damper	39	18	39	18	39	18	39	18	58	26	58	26	58	26	65	29
Manual Dampers	12	5	12	5	12	5	18	8	18	8	18	8	18	8	25	11
Medium Gas Heat	12	5	9	4	9	4	9	4	15	7	15	7	18	8	18	8
High Gas Heat	–	–	17	8	17	8	17	8	29	13	29	13	35	16	42	19
Hail Guard (louvered)	16	7	16	7	16	7	16	7	34	15	34	15	34	15	45	20
Cu/Cu Condenser Coil	35	16	35	16	35	16	95	43	95	43	95	43	170	77	190	86
Cu/Cu Condenser and Evaporator Coils	60	27	60	27	90	41	165	75	140	64	195	88	270	122	280	127
Roof Curb (14–in. curb)	115	52	115	52	115	52	115	52	143	65	143	65	143	65	180	82
Roof Curb (24–in. curb)	197	89	197	89	197	89	197	89	245	111	245	111	245	111	255	116
CO_2 sensor	5	2	5	2	5	2	5	2	5	2	5	2	5	2	5	2
Flue Discharge Deflector	7	3	7	3	7	3	7	3	7	3	7	3	7	3	7	3
Optional Indoor Motor/Drive	10	5	10	5	10	5	10	5	15	7	15	7	15	7	45	20
Motor Master Controller	35	16	35	16	35	16	35	16	35	16	35	16	35	16	40	18
Supply Smoke Detector	5	2	5	2	5	2	5	2	5	2	5	2	5	2	5	2
Fan/Filter Status Switch	2	1	2	1	2	1	2	1	2	1	2	1	2	1	2	1
Non–Fused Disconnect	15	7	15	7	15	7	15	7	15	7	15	7	15	7	15	7
Non–Powered Convenience outlet	5	2	5	2	5	2	5	2	5	2	5	2	5	2	5	2
Enthalpy Sensor	2	1	2	1	2	1	2	1	2	1	2	1	2	1	2	1
Differential Enthalpy Sensor	3	1	3	1	3	1	3	1	3	1	3	1	3	1	3	1
2 Speed VFD Drive Motor System	–	–	–	–	–	–	–	–	20	9	20	9	20	9	20	9

APPLICATION DATA

Min operating ambient temp (cooling):

In mechanical cooling mode, this rooftop unit can safely operate down to an outdoor ambient temperature of 35°F (–2°C) and 25°F (–4°C), with an accessory winter start kit. It is possible to provide cooling at lower outdoor ambient temperatures by using less outside air, economizers, and/or accessory low ambient kits.

Max operating ambient temp (cooling):

The maximum operating ambient temperature for cooling mode is 125°F (52°C). While cooling operation above 125°F (52°C) may be possible, it could cause either a reduction in performance, reliability, or a protective action by the unit's internal safety devices.

Min mixed air temp (heating):

Using the factory settings, the minimum temperatures for the mixed air (the combined temperature of the warm return air and the cold outdoor air) entering the dimpled, gas heat exchangers are:

Aluminized	Stainless Steel
50°F (10°C) continuous	40°F (4°C) continuous
45°F (7°C) intermittent	35°F (2°C) intermittent

Operating at lower mixed–air temperatures may be possible, if a field–supplied, outdoor air thermostat initiates both heat stages when the temperature is less than the minimum temperatures listed above.

Min and max airflow (heating and cooling):

To maintain safe and reliable operation of your rooftop, operate within the heating airflow limits during heating mode and cooling airflow limits during cooling mode. Operating above the max may cause blow–off, undesired airflow noise, or airflow related problems with the rooftop unit. Operating below the min may cause problems with coil freeze–up and unsafe heating operation. Heating and cooling limitations differ when evaluating operating CFM, the minimum value is the HIGHER of the cooling and heating minimum CFM values published in Table 7 and the maximum value is the LOWER of the cooling and heating minimum values published in Table 7.

Heating–to–cooling changeover:

Your unit will automatically change from heating to cooling mode when using a thermostat with an auto–change–over feature.

Airflow:

All units are draw–though in cooling mode and blow–through in heating mode.

Outdoor air application strategies:

Economizers reduce operating expenses and compressor run time by providing a free source of cooling and a means of ventilation to match application changing needs. In fact, they should be considered for most applications. Also, consider the various economizer control methods and their benefits, as well as sensors required to accomplish your application goals.

Motor limits, break horsepower (BHP):

Due to internal design of the units, the air path, and specially designed motors, the full horsepower (maximum continuous BHP) band, as listed in Table 8 and 10, can be used with the utmost confidence. There is no need for extra safety factors, as the motors are designed and rigorously tested to use the entire, listed BHP range without either nuisance tripping or premature motor failure.

Propane heating:

Propane has different physical qualities than natural gas. As a result, Propane requires different fuel to air mixture. To optimize the fuel/air mixture for Propane, *FAST* sells different burner orifices in an easy to install accessory kit. To select the correct burner orifices or determine the heat capacity for an Propane application, use either the selection software, or the unit's service manual.

High altitude heating:

High altitudes have less oxygen, which affects the fuel/air mixture in heat exchangers. In order to maintain a proper fuel/air mixture, heat exchangers operating in altitudes above 2000 ft (610 m) require different orifices. To select the correct burner orifices or determine the heat capacity for a high altitude application, use either the selection software, or the unit's service manual.

High altitudes have less oxygen, which means heat exchangers need less fuel. The new gas orifices in this field–installed kit make the necessary adjustment for high altitude applications. They restore the optimal fuel to air mixture and maintain healthy combustion on altitudes above 2000 ft (610 m).

NOTE: Typical natural gas heating value ranges from 975 to 1050 Btu/ft^3 at sea level nationally. The heating value goes down approximately 1.7% per every thousand feet elevation. Standard factory orifices can typically be used up to 2000 ft (610m) elevation without any operational issues.

NOTE: For installations in Canada, the input rating should be derated by 10% for altitudes from 2000 ft (610m)to 4500 ft (1372m) above sea level.

Sizing a rooftop

Bigger isn't necessarily better. While an air conditioner needs to have enough capacity to meet the design loads, it doesn't need excess capacity. In fact, excess capacity typically results in very poor part load performance and humidity control.

Using higher design temperatures than ASHRAE recommends for your location, adding "safety factors" to the calculated load, are all signs of oversizing air conditioners. Oversizing the air conditioner leads to poor humidity control, reduced efficiency, higher utility bills, larger indoor temperature swings, excessive noise, and increased wear and tear on the air conditioner.

Rather than oversizing an air conditioner, engineers should "right–size" or even slightly undersize air conditioners. Correctly sizing an air conditioner controls humidity better; promotes efficiency; reduces utility bills; extends equipment life, and maintains even, comfortable temperatures.

Low ambient applications

The optional economizer can adequately cool your space by bringing in fresh, cool outside air. In fact, when so equipped, accessory low–ambient kit may not be necessary. In low ambient conditions, unless the outdoor air is excessively humid or contaminated, economizer–based "free cooling" is the preferred less costly and energy conscious method.

In low ambient applications where outside air might not be desired (such as contaminated or excessively humid outdoor environments), your rooftop can operate to ambient temperatures down to –20°F (–29°C) using the recommended accessory Motormaster low ambient controller.

SELECTION PROCEDURE (WITH RGH072 EXAMPLE)[1]

I. Determine cooling and heating loads.

Given:

Mixed air dry bulb	80°F (27°C)
Mixed air wet bulb	67°F (19°C)
Ambient dry bulb	95°F (35°C)
TC_{Load}	73.6 MBH
SHC_{Load}	53.3 MBH
Vertical supply air	2100 CFM
Heating load	85.0 MBH
External static pressure	0.67 in. wg
Electrical characteristics	230–3–60

II. Make an initial guess at cooling tons.

Refrig. tons = TC_{Load} / 12 MBH per ton
Refrig. tons = 72.0 / 12 = 6.0 tons
In this case, start by looking at the RGH072.

III. Look up the rooftop's TC and SHC.

Table 15 shows that, at the application's supply air CFM, mixed air and ambient temperatures, the RGH072 supplies:
TC = 73.6 MBH[2]
SHC = 53.3 MBH[2]

IV. Calculate the building latent heat load.

$LC_{Load} = TC_{Load} - SHC_{Load}$
LC_{Load} = 72.0 MBH – 54.0 MBH = 18.0 MBH

V. Calculate RTU latent heat capacity.

LC = TC – SHC
LC = 73.6 MBH – 53.3 MBH = 20.3 MBH

VI. Compare RTU capacities to loads.[3]

Compare the rooftop's SHC and LC to the building's sensible and latent heat loads.

VII. Select factory options (FIOP)

Local code requires an economizer for any unit with TC greater than 65.0 MBH.

VIII. Calculate the total static pressure.

External static pressure	0.67 in. wg
Sum of FIOP / Accessory static	+0.13 in. wg
Total Static Pressure	0.80 in. wg

IX. Look up the indoor fan RPM & BHP.

Table 26 shows, at 2100 CFM & ESP= 0.8,
RPM = 712 & BHP = 1.17

X. Convert BHP (Step VIII) into fan motor heat.

Fan motor heat = 2.546* BHP/Motor Eff.[4]
Fan motor heat = 3.7 MBH

XI. Calculate RTU heating capacity.

Building heating load	85.0 MBH
Fan motor heat	–3.7 MBH
Required heating capacity	81.3 MBH

XII. Select a gas heater.

Table 4 shows the heating capacities of the RGH072 = 103.0 MBH. Select the RGH072

XIII. Determine electrical requirements.

Table 51 shows the MCA and Breaker Size of a RGH072 (without convenience outlet) as:
MCA = 32.0 amps & MOCP = 50.0 amps
Min. disconnect size: FLA = 31.0 & LRA = 148.

LEGEND

BHP — Break horsepower
FLA — Full load amps
LC — Latent capacity
LRA — Lock rotor amp
MBH — (1,000) BTUH
MCA — Min. circuit ampacity
MOCP — Max. over–current protection
RPM — Revolutions per minute
RTU — Rooftop unit
SHC — Sensible heat capacity
TC — Total capacity

NOTES:

1. Selection software saves time by performing many of the steps above.

2. Unit ratings are gross capacities and do not include the effect of evaporator fan motor heat. See Step XI. for determining amount of evaporator fan motor heat to subtract from total and sensible capacities to obtain net cooling and net sensible capacities.

3. Selecting a unit with a SHC slightly lower than the SHC_{Load} is often better than oversizing. Slightly lower SHC's will help control indoor humidity, and prevent temperature swings.

4. Indoor fan motor efficiency is available in Table 46. Use the decimal form in the equation, eg. 80% = .8.

Table 12 – COOLING CAPACITIES 1 STAGE COOLING 3 TONS

RGH036				AMBIENT TEMPERATURE														
				85			95			105			115			125		
				EA (dB)			EA (dB)			EA (dB)			EA (dB)			EA (dB)		
				75	80	85	75	80	85	75	80	85	75	80	85	75	80	85
900 Cfm	EA (wb)	58	TC	32.1	32.1	36.3	30.8	30.8	34.9	29.4	29.4	33.4	28.0	28.0	31.7	26.3	26.3	29.8
			SHC	27.8	32.1	36.3	26.7	30.8	34.9	25.5	29.4	33.4	24.2	28.0	31.7	22.8	26.3	29.8
		62	TC	34.0	34.0	34.3	32.3	32.3	33.5	30.6	30.6	32.6	28.7	28.7	31.7	26.6	26.6	30.6
			SHC	25.0	29.7	34.3	24.2	28.9	33.5	23.4	28.0	32.6	22.5	27.1	31.7	21.5	26.0	30.6
		67	TC	37.3	37.3	37.3	35.5	35.5	35.5	33.6	33.6	33.6	31.5	31.5	31.5	29.2	29.2	29.2
			SHC	20.7	25.4	30.0	20.0	24.6	29.3	19.2	23.8	28.4	18.3	22.9	27.6	17.4	22.0	26.6
		72	TC	40.8	40.8	40.8	38.9	38.9	38.9	36.9	36.9	36.9	34.6	34.6	34.6	32.2	32.2	32.2
			SHC	16.3	21.0	25.7	15.6	20.3	25.0	14.8	19.5	24.1	13.9	18.6	23.3	13.0	17.7	22.3
		76	TC	–	43.9	43.9	–	41.8	41.8	–	39.6	39.6	–	37.2	37.2	–	34.6	34.6
			SHC	–	17.4	22.4	–	16.7	21.7	–	15.9	20.8	–	15.1	19.9	–	14.2	19.0
1050 Cfm	EA (wb)	58	TC	33.8	33.8	38.4	32.5	32.5	36.8	31.0	31.0	35.1	29.4	29.4	33.3	27.6	27.6	31.3
			SHC	29.3	33.8	38.4	28.1	32.5	36.8	26.9	31.0	35.1	25.5	29.4	33.3	23.9	27.6	31.3
		62	TC	35.1	35.1	37.5	33.3	33.3	36.6	31.5	31.5	35.7	29.6	29.6	34.5	27.7	27.7	32.6
			SHC	26.9	32.2	37.5	26.0	31.3	36.6	25.1	30.4	35.7	24.1	29.3	34.5	22.7	27.7	32.6
		67	TC	38.4	38.4	38.4	36.5	36.5	36.5	34.5	34.5	34.5	32.3	32.3	32.3	29.9	29.9	29.9
			SHC	22.0	27.3	32.7	21.2	26.5	31.9	20.3	25.7	31.0	19.4	24.8	30.1	18.5	23.8	29.1
		72	TC	42.0	42.0	42.0	40.0	40.0	40.0	37.8	37.8	37.8	35.5	35.5	35.5	32.9	32.9	32.9
			SHC	16.9	22.3	27.6	16.1	21.5	26.9	15.3	20.7	26.0	14.4	19.8	25.1	13.5	18.8	24.2
		76	TC	–	45.0	45.0	–	42.9	42.9	–	40.6	40.6	–	38.0	38.0	–	35.3	35.3
			SHC	–	18.1	23.8	–	17.4	23.0	–	16.6	22.2	–	15.7	21.3	–	14.8	20.3
1200 Cfm	EA (wb)	58	TC	35.3	35.3	40.0	33.9	33.9	38.4	32.3	32.3	36.6	30.6	30.6	34.7	28.7	28.7	32.5
			SHC	30.6	35.3	40.0	29.4	33.9	38.4	28.0	32.3	36.6	26.5	30.6	34.7	24.9	28.7	32.5
		62	TC	35.9	35.9	40.5	34.2	34.2	39.4	32.4	32.4	38.1	30.6	30.6	36.1	28.7	28.7	33.9
			SHC	28.6	34.5	40.5	27.7	33.6	39.4	26.6	32.4	38.1	25.2	30.6	36.1	23.6	28.7	33.9
		67	TC	39.3	39.3	39.3	37.3	37.3	37.3	35.2	35.2	35.2	32.9	32.9	32.9	30.5	30.5	31.6
			SHC	23.1	29.1	35.2	22.3	28.3	34.4	21.4	27.5	33.5	20.5	26.6	32.6	19.5	25.6	31.6
		72	TC	42.9	42.9	42.9	40.8	40.8	40.8	38.5	38.5	38.5	36.1	36.1	36.1	33.4	33.4	33.4
			SHC	17.3	23.4	29.5	16.6	22.6	28.7	15.7	21.8	27.9	14.8	20.9	27.0	13.9	19.9	26.0
		76	TC	–	45.9	45.9	–	43.7	43.7	–	41.3	41.3	–	38.7	38.7	–	35.9	35.9
			SHC	–	18.8	25.1	–	18.0	24.3	–	17.2	23.4	–	16.3	22.5	–	15.4	21.5
1350 Cfm	EA (wb)	58	TC	36.6	36.6	41.5	35.1	35.1	39.7	33.4	33.4	37.9	31.6	31.6	35.8	29.6	29.6	33.6
			SHC	31.7	36.6	41.5	30.4	35.1	39.7	28.9	33.4	37.9	27.4	31.6	35.8	25.7	29.6	33.6
		62	TC	36.7	36.7	43.2	35.1	35.1	41.3	33.4	33.4	39.4	31.6	31.6	37.3	29.6	29.6	34.9
			SHC	30.2	36.7	43.2	28.8	35.1	41.3	27.5	33.4	39.4	26.0	31.6	37.3	24.4	29.6	34.9
		67	TC	39.9	39.9	39.9	37.9	37.9	37.9	35.8	35.8	35.9	33.4	33.4	34.9	30.9	30.9	33.9
			SHC	24.2	30.9	37.6	23.4	30.1	36.8	22.5	29.2	35.9	21.6	28.3	34.9	20.6	27.2	33.9
		72	TC	43.6	43.6	43.6	41.4	41.4	41.4	39.1	39.1	39.1	36.6	36.6	36.6	33.9	33.9	33.9
			SHC	17.8	24.5	31.3	17.0	23.7	30.5	16.1	22.9	29.6	15.2	22.0	28.7	14.3	21.0	27.7
		76	TC	–	46.7	46.7	–	44.4	44.4	–	41.9	41.9	–	39.2	39.2	–	36.3	36.3
			SHC	–	19.4	26.3	–	18.6	25.5	–	17.8	24.6	–	16.9	23.7	–	15.9	22.7
1500 Cfm	EA (wb)	58	TC	37.7	37.7	42.7	36.1	36.1	40.9	34.3	34.3	38.9	32.5	32.5	36.8	30.4	30.4	34.4
			SHC	32.6	37.7	42.7	31.3	36.1	40.9	29.8	34.3	38.9	28.1	32.5	36.8	26.3	30.4	34.4
		62	TC	37.7	37.7	44.4	36.1	36.1	42.5	34.4	34.4	40.5	32.5	32.5	38.3	30.4	30.4	35.8
			SHC	31.0	37.7	44.4	29.7	36.1	42.5	28.3	34.4	40.5	26.7	32.5	38.3	25.0	30.4	35.8
		67	TC	40.5	40.5	40.5	38.4	38.4	39.1	36.2	36.2	38.2	33.8	33.8	37.2	31.2	31.2	36.1
			SHC	25.2	32.6	40.0	24.4	31.7	39.1	23.5	30.8	38.2	22.5	29.9	37.2	21.5	28.8	36.1
		72	TC	44.2	44.2	44.2	41.9	41.9	41.9	39.6	39.6	39.6	37.0	37.0	37.0	34.2	34.2	34.2
			SHC	18.2	25.6	33.0	17.4	24.8	32.2	16.5	23.9	31.3	15.6	23.0	30.4	14.7	22.0	29.4
		76	TC	–	47.2	47.2	–	44.9	44.9	–	42.3	42.3	–	39.6	39.6	–	36.7	36.7
			SHC	–	19.9	27.5	–	19.1	26.7	–	18.3	25.8	–	17.4	24.9	–	16.4	23.9

LEGEND:

– – Do not operate
Cfm – Cubic feet per minute (supply air)
EAT(db) – Entering air temperature (dry bulb)
EAT(wb) – Entering air temperature (wet bulb)
SHC – Sensible heat capacity
TC – Total capacity

3 TONS — UNIT WITH HOT GAS REHEAT SYSTEM IN SUBCOOLING MODE										
Temp (F) Air Entering Condenser (Edb)		AIR ENTERING EVAPORATOR — CFM								
		900 / 0.01			1200 / 0.02			1500 / 0.04		
		Air Entering Evaporator — Ewb (F)								
		72	67	62	72	67	62	72	67	62
75	TC	44.6	40.3	36.5	47.0	43.0	39.1	48.8	44.3	40.8
	SHC	19.8	24.5	29.3	22.6	29.1	35.3	25.4	33.0	40.4
	kW	2.02	1.97	1.93	1.96	2.00	2.05	2.08	2.02	1.98
85	TC	42.1	38.1	34.4	44.6	40.5	36.9	46.1	41.9	38.6
	SHC	17.5	22.5	27.4	20.4	26.8	33.2	22.9	30.8	38.2
	kW	2.28	2.23	2.19	2.22	2.26	2.31	2.33	2.28	2.24
95	TC	39.6	35.8	32.3	41.9	38.0	34.5	43.2	39.3	36.2
	SHC	15.2	20.3	25.5	17.8	24.5	31.1	20.2	28.4	35.9
	kW	2.56	2.51	2.47	2.50	2.54	2.60	2.62	2.56	2.52
105	TC	36.8	33.2	30.0	38.9	35.3	32.0	40.2	36.5	33.6
	SHC	12.7	18.1	23.4	15.1	22.0	28.8	17.5	25.8	33.6
	kW	2.88	2.83	2.79	2.82	2.86	2.91	2.93	2.88	2.84
115	TC	33.9	30.5	27.5	35.8	32.4	29.4	37.0	33.5	30.9
	SHC	10.1	15.7	21.2	12.3	19.5	26.4	14.5	23.1	30.9
	kW	3.23	3.19	3.15	3.17	3.21	3.26	3.28	3.23	3.19
125	TC	30.8	27.7	24.9	32.5	29.3	26.5	33.5	30.3	27.9
	SHC	7.3	13.1	18.9	9.4	16.7	23.9	11.4	20.3	27.9
	kW	3.62	3.59	3.56	3.57	3.60	3.65	3.66	3.62	3.59

3 TONS — UNIT WITH HOT GAS REHEAT SYSTEM IN HOT GAS REHEAT MODE										
Temp (F) Air Entering Condenser (Edb)		AIR ENTERING EVAPORATOR - Ewb (F)								
		75 Dry Bulb 62.5 Wet Bulb (50% Relative)			75 Dry Bulb 64 Wet Bulb (56% Relative)			75 Dry Bulb 65.3 Wet Bulb (60% Relative)		
		Air Entering Evaporator - Cfm								
		900	1200	1500	900	1200	1500	900	1200	1500
80	TC	16.46	17.15	17.74	16.66	17.23	17.79	16.85	17.74	18.29
	SHC	5.10	6.60	8.15	3.21	4.33	5.61	1.59	2.75	3.83
	kW	1.94	2.01	2.02	2.04	2.13	2.15	2.12	2.14	2.16
75	TC	16.61	17.52	18.09	17.18	18.09	18.67	17.69	18.61	19.19
	SHC	5.24	6.96	8.48	3.71	5.15	6.45	2.40	3.59	4.69
	kW	1.98	2.00	2.01	1.99	2.01	2.02	2.00	2.02	2.03
70	TC	17.00	18.06	18.63	17.56	18.46	19.40	18.41	19.35	20.10
	SHC	5.62	7.47	9.00	4.08	5.50	7.16	3.09	4.31	5.58
	kW	1.96	1.94	1.96	1.97	2.00	1.94	1.91	1.94	1.92
60	TC	17.63	18.49	19.37	18.17	19.38	19.95	18.66	19.52	20.46
	SHC	6.21	7.89	9.71	4.66	6.39	7.68	3.31	4.45	5.90
	kW	1.93	1.96	1.92	1.95	1.92	1.94	1.97	2.00	1.96
50	TC	17.82	18.59	19.72	18.31	19.73	20.26	18.76	20.21	20.73
	SHC	6.40	7.99	10.05	4.79	6.71	7.97	3.40	5.11	6.16
	kW	1.98	2.03	1.94	2.01	1.94	1.97	2.03	1.96	1.99
40	TC	17.70	19.38	19.85	19.10	20.30	20.34	19.53	20.76	21.26
	SHC	6.30	8.74	10.17	5.54	7.26	8.05	4.13	5.64	6.67
	kW	2.07	1.95	1.99	1.93	1.91	2.02	1.96	1.94	1.97

LEGEND

Edb – Entering Dry–Bulb
Ewb – Entering Wet–Bulb
kW – Compressor Motor Power Input
Idb – Leaving Dry–Bulb
Iwb – Leaving Wet–Bulb
SHC – Sensible Heat Capacity (1000 Btuh) Gross
TC – Total Capacity (1000 Btuh) Gross

NOTES:

Direct interpolation is permissible. Do not extrapolate.

The following formulas may be used:

$$t_{ldb} = t_{edb} - \frac{\text{sensible capacity (Btuh)}}{1.10 \times \text{cfm}}$$

t_{lwb} = Wet–bulb temperature corresponding to enthalpy of air leaving evaporator coil (h_{lwb})

$$h_{lwb} = h_{ewb} - \frac{\text{total capacity (Btuh)}}{4.5 \times \text{cfm}}$$

Where: h_{ewb} = Enthalpy of air entering evaporator coil

RGH048				AMBIENT TEMPERATURE														
				85			95			105			115			125		
				EA (dB)			EA (dB)			EA (dB)			EA (dB)			EA (dB)		
				75	80	85	75	80	85	75	80	85	75	80	85	75	80	85
1200 Cfm	EA (wb)	58	TC	43.2	43.2	49.1	41.5	41.5	47.2	39.7	39.7	45.1	37.7	37.7	42.9	35.6	35.6	40.4
			SHC	37.3	43.2	49.1	35.9	41.5	47.2	34.3	39.7	45.1	32.6	37.7	42.9	30.7	35.6	40.4
		62	TC	45.9	45.9	46.0	43.7	43.7	45.0	41.3	41.3	43.8	38.8	38.8	42.6	36.0	36.0	41.2
			SHC	33.5	39.8	46.0	32.5	38.7	45.0	31.3	37.6	43.8	30.1	36.3	42.6	28.8	35.0	41.2
		67	TC	50.5	50.5	50.5	48.0	48.0	48.0	45.4	45.4	45.4	42.6	42.6	42.6	39.6	39.6	39.6
			SHC	27.9	34.1	40.4	26.8	33.1	39.4	25.7	32.0	38.2	24.5	30.8	37.1	23.2	29.5	35.8
		72	TC	55.4	55.4	55.4	52.7	52.7	52.7	49.9	49.9	49.9	46.8	46.8	46.8	43.5	43.5	43.5
			SHC	22.0	28.4	34.7	21.0	27.3	33.7	19.9	26.2	32.5	18.7	25.0	31.3	17.4	23.8	30.1
		76	TC	–	59.7	59.7	–	56.8	56.8	–	53.7	53.7	–	50.4	50.4	–	46.8	46.8
			SHC	–	23.6	30.2	–	22.6	29.2	–	21.5	28.1	–	20.3	26.8	–	19.1	25.5
1400 Cfm	EA (wb)	58	TC	45.6	45.6	51.9	43.8	43.8	49.8	41.9	41.9	47.6	39.7	39.7	45.1	37.3	37.3	42.4
			SHC	39.4	45.6	51.9	37.9	43.8	49.8	36.2	41.9	47.6	34.3	39.7	45.1	32.3	37.3	42.4
		62	TC	47.4	47.4	50.5	45.1	45.1	49.3	42.6	42.6	48.0	40.0	40.0	46.5	37.4	37.4	44.2
			SHC	36.0	43.2	50.5	34.9	42.1	49.3	33.7	40.9	48.0	32.4	39.5	46.5	30.6	37.4	44.2
		67	TC	52.1	52.1	52.1	49.5	49.5	49.5	46.7	46.7	46.7	43.7	43.7	43.7	40.5	40.5	40.5
			SHC	29.5	36.8	44.0	28.4	35.7	42.9	27.3	34.5	41.8	26.0	33.3	40.5	24.7	32.0	39.2
		72	TC	57.1	57.1	57.1	54.3	54.3	54.3	51.2	51.2	51.2	48.0	48.0	48.0	44.5	44.5	44.5
			SHC	22.8	30.1	37.4	21.7	29.0	36.3	20.5	27.8	35.1	19.3	26.6	33.9	18.0	25.3	32.6
		76	TC	–	61.4	61.4	–	58.3	58.3	–	55.1	55.1	–	51.6	51.6	–	47.8	47.8
			SHC	–	24.6	32.2	–	23.5	31.1	–	22.4	29.9	–	21.2	28.7	–	19.9	27.4
1600 Cfm	EA (wb)	58	TC	47.7	47.7	54.2	45.8	45.8	52.0	43.7	43.7	49.6	41.3	41.3	47.0	38.8	38.8	44.1
			SHC	41.2	47.7	54.2	39.5	45.8	52.0	37.7	43.7	49.6	35.7	41.3	47.0	33.5	38.8	44.1
		62	TC	48.7	48.7	54.5	46.3	46.3	53.2	43.7	43.7	51.7	41.4	41.4	48.9	38.8	38.8	45.9
			SHC	38.3	46.4	54.5	37.1	45.2	53.2	35.8	43.7	51.7	33.9	41.4	48.9	31.8	38.8	45.9
		67	TC	53.3	53.3	53.3	50.6	50.6	50.6	47.7	47.7	47.7	44.6	44.6	44.6	41.2	41.2	42.6
			SHC	31.0	39.2	47.5	29.9	38.1	46.3	28.7	37.0	45.2	27.5	35.7	43.9	26.2	34.4	42.6
		72	TC	58.4	58.4	58.4	55.4	55.4	55.4	52.3	52.3	52.3	48.9	48.9	48.9	45.2	45.2	45.2
			SHC	23.4	31.7	39.9	22.3	30.6	38.8	21.1	29.4	37.6	19.9	28.2	36.4	18.6	26.8	35.1
		76	TC	–	62.7	62.7	–	59.5	59.5	–	56.1	56.1	–	52.5	52.5	–	48.6	48.6
			SHC	–	25.5	34.0	–	24.4	32.9	–	23.2	31.7	–	22.0	30.4	–	20.7	29.1
1800 Cfm	EA (wb)	58	TC	49.5	49.5	56.2	47.4	47.4	53.9	45.2	45.2	51.3	42.7	42.7	48.5	40.1	40.1	45.5
			SHC	42.8	49.5	56.2	41.0	47.4	53.9	39.0	45.2	51.3	36.9	42.7	48.5	34.6	40.1	45.5
		62	TC	49.8	49.8	58.1	47.5	47.5	56.1	45.2	45.2	53.4	42.8	42.8	50.5	40.1	40.1	47.4
			SHC	40.4	49.2	58.1	38.8	47.5	56.1	37.0	45.2	53.4	35.0	42.8	50.5	32.8	40.1	47.4
		67	TC	54.3	54.3	54.3	51.5	51.5	51.5	48.5	48.5	48.5	45.3	45.3	47.1	41.8	41.8	45.7
			SHC	32.5	41.7	50.8	31.4	40.5	49.7	30.2	39.3	48.5	28.9	38.0	47.1	27.5	36.6	45.7
		72	TC	59.4	59.4	59.4	56.3	56.3	56.3	53.1	53.1	53.1	49.6	49.6	49.6	45.8	45.8	45.8
			SHC	24.0	33.2	42.4	22.9	32.1	41.3	21.7	30.9	40.1	20.4	29.6	38.8	19.1	28.3	37.5
		76	TC	–	63.8	63.8	–	60.5	60.5	–	57.0	57.0	–	53.2	53.2	–	49.2	49.2
			SHC	–	26.3	35.8	–	25.2	34.6	–	24.0	33.4	–	22.8	32.1	–	21.5	30.8
2000 Cfm	EA (wb)	58	TC	51.0	51.0	58.0	48.8	48.8	55.5	46.5	46.5	52.8	43.9	43.9	49.9	41.1	41.1	46.7
			SHC	44.1	51.0	58.0	42.2	48.8	55.5	40.2	46.5	52.8	37.9	43.9	49.9	35.5	41.1	46.7
		62	TC	51.1	51.1	60.4	48.9	48.9	57.8	46.5	46.5	55.0	44.0	44.0	51.9	41.1	41.1	48.6
			SHC	41.8	51.1	60.4	40.0	48.9	57.8	38.1	46.5	55.0	36.0	44.0	51.9	33.7	41.1	48.6
		67	TC	55.1	55.1	55.1	52.1	52.1	52.9	49.1	49.1	51.6	45.8	45.8	50.2	42.3	42.3	48.7
			SHC	33.9	44.0	54.1	32.7	42.8	52.9	31.5	41.5	51.6	30.2	40.2	50.2	28.8	38.8	48.7
		72	TC	60.3	60.3	60.3	57.1	57.1	57.1	53.7	53.7	53.7	50.1	50.1	50.1	46.3	46.3	46.3
			SHC	24.5	34.7	44.8	23.4	33.5	43.6	22.2	32.3	42.4	21.0	31.1	41.2	19.6	29.7	39.8
		76	TC	–	64.6	64.6	–	61.2	61.2	–	57.6	57.6	–	53.8	53.8	–	49.7	49.7
			SHC	–	27.1	37.5	–	26.0	36.3	–	24.8	35.1	–	23.5	33.8	–	22.2	32.4

LEGEND:

– – Do not operate
Cfm – Cubic feet per minute (supply air)
EAT(db) – Entering air temperature (dry bulb)
EAT(wb) – Entering air temperature (wet bulb)
SHC – Sensible heat capacity
TC – Total capacity

4 TONS — UNIT WITH HOT GAS REHEAT SYSTEM IN SUBCOOLING MODE										
Temp (F) Air Entering Condenser (Edb)		AIR ENTERING EVAPORATOR — CFM								
		1200 / 0.04			1600 / 0.07			2000 / 0.10		
		Air Entering Evaporator — Ewb (F)								
		72	67	62	72	67	62	72	67	62
75	TC	57.8	52.3	47.2	61.5	55.6	50.6	63.7	57.9	0.0
	SHC	24.2	30.5	36.8	27.9	35.9	44.0	31.2	40.9	0.0
	kW	2.50	2.47	2.44	2.46	2.48	2.51	2.53	2.50	0.00
85	TC	54.1	48.9	44.1	57.1	52.0	47.3	59.6	54.0	49.5
	SHC	20.7	27.3	33.9	23.9	32.6	41.0	27.3	37.3	47.1
	kW	2.81	2.78	2.76	2.78	2.80	2.82	2.84	2.81	2.79
95	TC	50.1	45.3	40.8	53.3	48.2	43.7	55.2	50.1	45.8
	SHC	17.0	24.0	30.9	20.4	29.1	37.7	23.3	33.6	43.6
	kW	3.16	3.14	3.12	3.13	3.15	3.18	3.19	3.16	3.14
105	TC	45.7	41.1	37.2	48.6	43.8	39.8	50.5	45.5	41.8
	SHC	12.9	20.1	27.6	16.0	25.0	34.1	19.0	29.4	39.9
	kW	3.56	3.54	3.52	3.54	3.55	3.58	3.59	3.56	3.55
115	TC	41.1	37.0	33.2	43.5	39.2	35.5	45.4	41.1	37.5
	SHC	8.7	16.4	23.9	11.3	20.7	30.1	14.3	25.4	35.8
	kW	4.02	4.01	4.00	4.00	4.01	4.03	4.04	4.03	4.01
125	TC	36.3	32.5	29.0	38.6	34.7	31.2	40.2	36.1	32.9
	SHC	4.3	12.2	20.1	6.8	16.6	26.2	9.4	20.8	31.5
	kW	4.54	4.53	4.53	4.53	4.54	4.54	4.55	4.54	4.54

4 TONS — UNIT WITH HOT GAS REHEAT SYSTEM IN HOT GAS REHEAT MODE										
Temp (F) Air Entering Condenser (Edb)		AIR ENTERING EVAPORATOR — Ewb (F)								
		75 Dry Bulb			75 Dry Bulb			75 Dry Bulb		
		62.5 Wet Bulb			64 Wet Bulb			65.3 Wet Bulb		
		(50% Relative)			(56% Relative)			(60% Relative)		
		Air Entering Evaporator — Cfm								
		1200	1600	2000	1200	1600	2000	1200	1600	2000
80	TC	18.64	19.95	20.78	19.35	20.71	21.51	20.00	21.37	22.33
	SHC	0.78	4.36	8.24	–1.95	1.01	4.29	–4.33	–1.91	0.99
	kW	2.66	2.68	2.69	2.67	2.69	2.69	2.68	2.69	2.68
75	TC	19.37	21.21	22.15	20.47	21.97	22.92	21.15	22.78	23.65
	SHC	1.48	5.52	9.49	–0.91	2.18	5.57	–3.26	–0.61	2.20
	kW	2.62	2.54	2.54	2.56	2.55	2.55	2.56	2.55	2.56
70	TC	19.92	21.63	22.64	20.77	22.52	23.61	21.70	23.39	24.26
	SHC	2.01	5.94	9.98	–0.61	2.70	6.23	–2.72	–0.02	2.78
	kW	2.60	2.56	2.54	2.58	2.54	2.53	2.54	2.52	2.54
60	TC	20.11	21.27	22.23	20.75	23.15	23.43	22.49	23.78	24.55
	SHC	2.24	5.70	9.70	–0.57	3.35	6.15	–1.95	0.40	3.13
	kW	2.69	2.74	2.73	2.72	2.58	2.68	2.56	2.60	2.63
50	TC	21.56	22.70	23.37	22.18	23.33	24.01	22.75	23.90	25.40
	SHC	3.61	7.03	10.76	0.78	3.57	6.73	–1.67	0.57	3.96
	kW	2.57	2.63	2.66	2.60	2.66	2.69	2.63	2.69	2.62
40	TC	21.67	23.23	24.04	22.76	23.82	25.57	23.28	24.34	26.13
	SHC	3.74	7.56	9.89	1.35	4.06	8.17	–1.15	1.01	4.67
	kW	2.64	2.64	2.69	2.61	2.67	2.58	2.64	2.70	2.61

LEGEND

Edb – Entering Dry–Bulb
Ewb – Entering Wet–Bulb
kW – Compressor Motor Power Input
Idb – Leaving Dry–Bulb
Iwb – Leaving Wet–Bulb
SHC – Sensible Heat Capacity (1000 Btuh) Gross
TC – Total Capacity (1000 Btuh) Gross

NOTES:

Direct interpolation is permissible. Do not extrapolate.

The following formulas may be used:

$$t_{ldb} = t_{edb} - \frac{\text{sensible capacity (Btuh)}}{1.10 \times \text{cfm}}$$

t_{lwb} = Wet–bulb temperature corresponding to enthalpy of air leaving evaporator coil (h_{lwb})

$$h_{lwb} = h_{ewb} - \frac{\text{total capacity (Btuh)}}{4.5 \times \text{cfm}}$$

Where: h_{ewb} = Enthalpy of air entering evaporator coil

Table 16 – COOLING CAPACITIES 1 STAGE COOLING 5 TONS

RGH060				AMBIENT TEMPERATURE														
				85			95			105			115			125		
				EA (dB)			EA (dB)			EA (dB)			EA (dB)			EA (dB)		
				75	80	85	75	80	85	75	80	85	75	80	85	75	80	85
1500 Cfm	EA (wb)	58	TC	53.4	53.4	60.6	51.3	51.3	58.2	49.0	49.0	55.6	46.5	46.5	52.7	43.7	43.7	49.5
			SHC	46.3	53.4	60.6	44.5	51.3	58.2	42.5	49.0	55.6	40.3	46.5	52.7	37.9	43.7	49.5
		62	TC	55.6	55.6	58.2	52.9	52.9	56.9	50.0	50.0	55.5	46.9	46.9	53.9	43.8	43.8	51.6
			SHC	42.0	50.1	58.2	40.7	48.8	56.9	39.4	47.4	55.5	37.9	45.9	53.9	36.0	43.8	51.6
		67	TC	60.8	60.8	60.8	57.8	57.8	57.8	54.6	54.6	54.6	51.1	51.1	51.1	47.4	47.4	47.4
			SHC	34.4	42.6	50.7	33.2	41.3	49.4	31.8	39.9	48.1	30.4	38.5	46.6	28.9	37.0	45.1
		72	TC	66.6	66.6	66.6	63.2	63.2	63.2	59.7	59.7	59.7	55.9	55.9	55.9	51.8	51.8	51.8
			SHC	26.7	34.8	43.0	25.4	33.6	41.7	24.1	32.2	40.4	22.6	30.8	38.9	21.1	29.3	37.4
		76	TC	–	71.4	71.4	–	67.9	67.9	–	64.0	64.0	–	59.9	59.9	–	55.5	55.5
			SHC	–	28.5	36.7	–	27.2	35.5	–	25.9	34.2	–	24.5	32.7	–	23.0	31.3
1750 Cfm	EA (wb)	58	TC	56.3	56.3	63.8	54.0	54.0	61.2	51.5	51.5	58.3	48.7	48.7	55.2	45.7	45.7	51.8
			SHC	48.8	56.3	63.8	46.8	54.0	61.2	44.6	51.5	58.3	42.2	48.7	55.2	39.6	45.7	51.8
		62	TC	57.3	57.3	64.0	54.5	54.5	62.5	51.6	51.6	60.7	48.8	48.8	57.5	45.8	45.8	53.9
			SHC	45.3	54.7	64.0	44.0	53.3	62.5	42.4	51.6	60.7	40.1	48.8	57.5	37.6	45.8	53.9
		67	TC	62.5	62.5	62.5	59.3	59.3	59.3	55.9	55.9	55.9	52.3	52.3	52.3	48.3	48.3	49.7
			SHC	36.6	46.0	55.4	35.3	44.7	54.1	33.9	43.3	52.7	32.4	41.8	51.3	30.9	40.3	49.7
		72	TC	68.3	68.3	68.3	64.8	64.8	64.8	61.0	61.0	61.0	57.0	57.0	57.0	52.7	52.7	52.7
			SHC	27.5	37.0	46.5	26.2	35.7	45.2	24.9	34.4	43.8	23.4	32.9	42.4	21.9	31.4	40.8
		76	TC	–	73.2	73.2	–	69.4	69.4	–	65.4	65.4	–	61.1	61.1	–	56.5	56.5
			SHC	–	29.7	39.3	–	28.4	38.0	–	27.1	36.7	–	25.6	35.2	–	24.1	33.7
2000 Cfm	EA (wb)	58	TC	58.7	58.7	66.5	56.2	56.2	63.7	53.5	53.5	60.6	50.6	50.6	57.3	47.3	47.3	53.7
			SHC	50.9	58.7	66.5	48.7	56.2	63.7	46.4	53.5	60.6	43.8	50.6	57.3	41.0	47.3	53.7
		62	TC	58.8	58.8	69.2	56.3	56.3	66.3	53.6	53.6	63.1	50.6	50.6	59.6	47.4	47.4	55.8
			SHC	48.3	58.8	69.2	46.3	56.3	66.3	44.0	53.6	63.1	41.6	50.6	59.6	39.0	47.4	55.8
		67	TC	63.8	63.8	63.8	60.4	60.4	60.4	56.9	56.9	57.3	53.1	53.1	55.8	49.1	49.1	54.1
			SHC	38.6	49.3	60.1	37.3	48.0	58.7	35.9	46.6	57.3	34.4	45.1	55.8	32.8	43.4	54.1
		72	TC	69.6	69.6	69.6	65.9	65.9	65.9	62.1	62.1	62.1	57.9	57.9	57.9	53.5	53.5	53.5
			SHC	28.4	39.1	49.9	27.0	37.8	48.6	25.7	36.4	47.2	24.2	35.0	45.7	22.6	33.4	44.2
		76	TC	–	74.5	74.5	–	70.6	70.6	–	66.5	66.5	–	62.0	62.0	–	–	–
			SHC	–	30.8	41.8	–	29.5	40.4	–	28.2	39.0	–	26.7	37.6	–	–	–
2250 Cfm	EA (wb)	58	TC	60.7	60.7	68.8	58.1	58.1	65.8	55.2	55.2	62.6	52.1	52.1	59.1	48.7	48.7	55.2
			SHC	52.6	60.7	68.8	50.3	58.1	65.8	47.9	55.2	62.6	45.2	52.1	59.1	42.2	48.7	55.2
		62	TC	60.8	60.8	71.6	58.1	58.1	68.5	55.3	55.3	65.1	52.2	52.2	61.4	48.7	48.7	57.4
			SHC	50.0	60.8	71.6	47.8	58.1	68.5	45.4	55.3	65.1	42.9	52.2	61.4	40.1	48.7	57.4
		67	TC	64.7	64.7	64.7	61.3	61.3	63.2	57.7	57.7	61.7	53.8	53.8	60.1	49.7	49.7	58.3
			SHC	40.6	52.6	64.5	39.2	51.2	63.2	37.8	49.7	61.7	36.2	48.2	60.1	34.6	46.5	58.3
		72	TC	70.6	70.6	70.6	66.8	66.8	66.8	62.8	62.8	62.8	58.6	58.6	58.6	54.0	54.0	54.0
			SHC	29.1	41.2	53.3	27.8	39.9	51.9	26.4	38.4	50.5	24.9	37.0	49.0	23.3	35.4	47.4
		76	TC	–	75.6	75.6	–	71.6	71.6	–	67.3	67.3	–	–	–	–	–	–
			SHC	–	31.9	44.1	–	30.6	42.8	–	29.2	41.4	–	–	–	–	–	–
2500 Cfm	EA (wb)	58	TC	62.5	62.5	70.8	59.7	59.7	67.6	56.7	56.7	64.2	53.4	53.4	60.5	49.9	49.9	56.5
			SHC	54.1	62.5	70.8	51.7	59.7	67.6	49.1	56.7	64.2	46.3	53.4	60.5	43.2	49.9	56.5
		62	TC	62.5	62.5	73.6	59.7	59.7	70.3	56.7	56.7	66.8	53.5	53.5	63.0	49.9	49.9	58.8
			SHC	51.4	62.5	73.6	49.1	59.7	70.3	46.6	56.7	66.8	43.9	53.5	63.0	41.0	49.9	58.8
		67	TC	65.5	65.5	68.9	62.0	62.0	67.4	58.3	58.3	65.9	54.4	54.4	64.2	50.2	50.2	62.2
			SHC	42.5	55.7	68.9	41.1	54.3	67.4	39.6	52.7	65.9	38.0	51.1	64.2	36.3	49.2	62.2
		72	TC	71.4	71.4	71.4	67.5	67.5	67.5	63.4	63.4	63.4	59.1	59.1	59.1	54.4	54.4	54.4
			SHC	29.9	43.2	56.5	28.5	41.8	55.2	27.1	40.4	53.7	25.6	38.9	52.2	24.0	37.3	50.6
		76	TC	–	76.4	76.4	–	72.3	72.3	–	–	–	–	–	–	–	–	–
			SHC	–	33.0	46.4	–	31.6	45.1	–	–	–	–	–	–	–	–	–

LEGEND:

– – Do not operate
Cfm – Cubic feet per minute (supply air)
EAT(db) – Entering air temperature (dry bulb)
EAT(wb) – Entering air temperature (wet bulb)
SHC – Sensible heat capacity
TC – Total capacity

5 TONS — UNIT WITH HOT GAS REHEAT SYSTEM IN SUBCOOLING MODE										
Temp (F) Air Entering Condenser (Edb)		AIR ENTERING EVAPORATOR — CFM								
		1500 / 0.01			2000 / 0.02			2500 / 0.03		
		Air Entering Evaporator — Ewb (F)								
		72	67	62	72	67	62	72	67	62
75	TC	66.9	60.3	54.8	71.0	64.4	58.6	73.5	66.9	61.6
	SHC	25.8	34.1	43.0	30.5	41.7	52.6	35.0	48.6	61.2
	kW	3.11	3.06	3.03	3.05	3.09	3.16	3.16	3.11	3.07
85	TC	62.4	56.5	51.2	66.3	60.1	54.7	68.2	62.3	57.5
	SHC	21.5	30.6	39.6	26.1	37.6	49.0	29.9	44.2	57.2
	kW	3.47	3.43	3.39	3.42	3.46	3.51	3.52	3.48	3.44
95	TC	57.8	52.3	47.3	61.3	55.6	50.6	63.5	57.7	53.2
	SHC	17.2	26.6	35.9	21.4	33.3	45.1	25.6	39.9	53.2
	kW	3.89	3.85	3.80	3.83	3.88	3.93	3.95	3.90	3.86
105	TC	52.8	47.5	42.9	55.4	50.0	45.3	58.0	52.2	47.9
	SHC	12.5	22.1	31.7	15.8	28.1	40.1	20.4	34.7	47.9
	kW	4.36	4.31	4.26	4.29	4.33	4.38	4.42	4.36	4.32
115	TC	47.4	42.8	38.6	50.1	45.2	41.1	51.8	47.1	43.4
	SHC	7.4	17.7	27.8	11.0	23.6	36.1	14.7	30.0	43.4
	kW	4.88	4.83	4.78	4.81	4.86	4.91	4.93	4.88	4.84
125	TC	41.6	37.5	33.8	44.0	39.7	35.8	45.8	41.3	38.0
	SHC	2.1	12.8	23.3	5.3	18.6	31.2	9.1	24.7	38.0
	kW	5.44	5.39	5.35	5.37	5.42	5.47	5.49	5.44	5.40

5 TONS — UNIT WITH HOT GAS REHEAT SYSTEM IN HOT GAS REHEAT MODE										
Temp (F) Air Entering Condenser (Edb)		AIR ENTERING EVAPORATOR — Ewb (F)								
		75 Dry Bulb 62.5 Wet Bulb (50% Relative)			75 Dry Bulb 64 Wet Bulb (56% Relative)			75 Dry Bulb 65.3 Wet Bulb (60% Relative)		
		Air Entering Evaporator — Cfm								
		1500	2000	2500	1500	2000	2500	1500	2000	2500
80	TC	25.29	27.61	28.72	26.81	28.62	29.71	27.68	29.53	30.63
	SHC	5.06	10.68	15.86	2.37	6.73	11.22	−0.40	3.30	7.17
	kW	3.23	3.12	3.13	3.12	3.13	3.14	3.12	3.14	3.15
75	TC	26.69	28.45	29.73	27.65	29.64	30.73	28.53	30.55	31.65
	SHC	6.39	11.52	16.85	3.20	7.72	12.20	0.43	4.29	8.16
	kW	3.08	3.11	3.09	3.10	3.09	3.11	3.11	3.10	3.12
70	TC	27.04	29.08	30.15	28.29	30.04	31.09	29.13	30.91	31.97
	SHC	6.76	12.14	17.28	3.82	8.14	12.60	1.02	4.67	8.51
	kW	3.15	3.12	3.15	3.11	3.14	3.17	3.13	3.16	3.18
60	TC	27.99	29.57	31.33	28.86	30.46	32.25	29.63	32.44	33.81
	SHC	7.70	12.66	18.45	4.41	8.60	13.74	1.54	6.16	10.28
	kW	3.17	3.23	3.15	3.21	3.26	3.18	3.23	3.12	3.10
50	TC	30.09	31.66	32.64	30.93	32.57	33.53	31.73	33.38	34.35
	SHC	9.72	14.66	19.72	6.40	10.61	14.99	3.56	7.10	10.85
	kW	3.01	3.07	3.11	3.04	3.10	3.15	3.07	3.14	3.18
40	TC	28.39	30.78	32.67	31.13	32.60	34.40	31.86	33.33	36.07
	SHC	8.17	13.89	19.80	6.63	10.69	15.85	3.72	7.10	12.51
	kW	3.39	3.32	3.24	3.14	3.23	3.15	3.18	3.27	3.08

LEGEND

Edb – Entering Dry–Bulb
Ewb – Entering Wet–Bulb
kW – Compressor Motor Power Input
Idb – Leaving Dry–Bulb
Iwb – Leaving Wet–Bulb
SHC – Sensible Heat Capacity (1000 Btuh) Gross
TC – Total Capacity (1000 Btuh) Gross

NOTES:

Direct interpolation is permissible. Do not extrapolate.

The following formulas may be used:

$$t_{ldb} = t_{edb} - \frac{\text{sensible capacity (Btuh)}}{1.10 \times \text{cfm}}$$

t_{lwb} = Wet–bulb temperature corresponding to enthalpy of air leaving evaporator coil (h_{lwb})

$$h_{lwb} = h_{ewb} - \frac{\text{total capacity (Btuh)}}{4.5 \times \text{cfm}}$$

Where: h_{ewb} = Enthalpy of air entering evaporator coil

Table 18 – COOLING CAPACITIES 1 STAGE COOLING 6 TONS

RGH072				AMBIENT TEMPERATURE														
				85			95			105			115			125		
				EA (dB)			EA (dB)			EA (dB)			EA (dB)			EA (dB)		
				75	80	85	75	80	85	75	80	85	75	80	85	75	80	85
1800 Cfm	EA (wb)	58	THC	64.1	64.1	72.5	61.8	61.8	69.9	59.2	59.2	67	56.3	56.3	63.7	53.2	53.2	60.2
			SHC	55.7	64.1	72.5	53.7	61.8	69.9	51.4	59.2	67	48.9	56.3	63.7	46.2	53.2	60.2
		62	THC	67.9	67.9	68.5	64.9	64.9	67	61.5	61.5	65.3	57.9	57.9	63.5	54	54	61.4
			SHC	50.2	59.4	68.5	48.8	57.9	67	47.1	56.2	65.3	45.4	54.4	63.5	43.4	52.4	61.4
		67	THC	74.8	74.8	74.8	71.5	71.5	71.5	67.8	67.8	67.8	63.8	63.8	63.8	59.5	59.5	59.5
			SHC	41.8	50.9	60.1	40.3	49.5	58.7	38.8	47.9	57.1	37.1	46.2	55.4	35.3	44.4	53.6
		72	THC	82.2	82.2	82.2	78.7	78.7	78.7	74.7	74.7	74.7	70.4	70.4	70.4	65.6	65.6	65.6
			SHC	33	42.3	51.6	31.6	40.9	50.2	30.1	39.3	48.6	28.4	37.7	46.9	26.7	35.9	45.1
		76	THC	–	88.7	88.7	–	84.8	84.8	–	80.6	80.6	–	76	76	–	70.9	70.9
			SHC	–	35.3	45.2	–	33.9	43.7	–	32.4	42	–	30.7	40.3	–	28.9	38.5
2100 Cfm	EA (wb)	58	THC	67.6	67.6	76.5	65.1	65.1	73.7	62.3	62.3	70.5	59.3	59.3	67.1	55.9	55.9	63.2
			SHC	58.7	67.6	76.5	56.6	65.1	73.7	54.1	62.3	70.5	51.5	59.3	67.1	48.5	55.9	63.2
		62	THC	70.1	70.1	74.9	67	67	73.2	63.5	63.5	71.3	59.7	59.7	69.1	56	56	65.8
			SHC	53.9	64.4	74.9	52.4	62.8	73.2	50.6	61	71.3	48.7	58.9	69.1	46.2	56	65.8
		67	THC	77.1	77.1	77.1	73.6	73.6	73.6	69.7	69.7	69.7	65.5	65.5	65.5	60.9	60.9	60.9
			SHC	44.2	54.8	65.3	42.7	53.3	63.9	41.2	51.7	62.3	39.4	50	60.5	37.6	48.1	58.6
		72	THC	84.7	84.7	84.7	80.9	80.9	80.9	76.8	76.8	76.8	72.2	72.2	72.2	67.2	67.2	67.2
			SHC	34.2	44.8	55.5	32.7	43.4	54	31.1	41.8	52.4	29.5	40.1	50.7	27.6	38.2	48.8
		76	THC	–	91.3	91.3	–	87.2	87.2	–	82.7	82.7	–	77.8	77.8	–	72.5	72.5
			SHC	–	36.7	47.8	–	35.3	46.3	–	33.7	44.7	–	32	43	–	30.2	41.1
2400 Cfm	EA (wb)	58	THC	70.6	70.6	79.9	68	68	76.9	65	65	73.5	61.7	61.7	69.8	58.1	58.1	65.8
			SHC	61.3	70.6	79.9	59	68	76.9	56.4	65	73.5	53.6	61.7	69.8	50.5	58.1	65.8
		62	THC	72	72	80.6	68.7	68.7	78.7	65.2	65.2	76.6	61.8	61.8	72.6	58.2	58.2	68.4
			SHC	57.3	69	80.6	55.6	67.2	78.7	53.7	65.2	76.6	50.9	61.8	72.6	48	58.2	68.4
		67	THC	78.9	78.9	78.9	75.2	75.2	75.2	71.2	71.2	71.2	66.8	66.8	66.8	62	62	63.4
			SHC	46.5	58.4	70.3	45	56.9	68.8	43.4	55.3	67.2	41.6	53.5	65.4	39.7	51.6	63.4
		72	THC	86.6	86.6	86.6	82.7	82.7	82.7	78.3	78.3	78.3	73.6	73.6	73.6	68.4	68.4	68.4
			SHC	35.2	47.2	59.2	33.7	45.7	57.7	32.1	44.1	56	30.4	42.3	54.3	28.5	40.5	52.4
		76	THC	–	93.3	93.3	–	89	89	–	84.4	84.4	–	79.3	79.3	–	73.7	73.7
			SHC	–	38	50.4	–	36.6	48.9	–	35	47.3	–	33.3	45.5	–	31.4	43.6
2700 Cfm	EA (wb)	58	THC	73.2	73.2	82.8	70.4	70.4	79.6	67.3	67.3	76.1	63.8	63.8	72.2	60	60	67.9
			SHC	63.6	73.2	82.8	61.1	70.4	79.6	58.4	67.3	76.1	55.4	63.8	72.2	52.1	60	67.9
		62	THC	73.7	73.7	85.5	70.5	70.5	82.8	67.3	67.3	79.1	63.9	63.9	75.1	60.1	60.1	70.6
			SHC	60.2	72.9	85.5	58.1	70.5	82.8	55.5	67.3	79.1	52.7	63.9	75.1	49.5	60.1	70.6
		67	THC	80.3	80.3	80.3	76.5	76.5	76.5	72.4	72.4	72.4	67.8	67.8	70	62.9	62.9	67.9
			SHC	48.7	61.9	75.1	47.1	60.4	73.6	45.5	58.7	71.9	43.7	56.8	70	41.7	54.8	67.9
		72	THC	88.2	88.2	88.2	84	84	84	79.6	79.6	79.6	74.6	74.6	74.6	69.3	69.3	69.3
			SHC	36.1	49.4	62.7	34.6	47.9	61.2	33	46.2	59.5	31.2	44.5	57.7	29.3	42.6	55.8
		76	THC	–	94.9	94.9	–	90.4	90.4	–	85.6	85.6	–	80.4	80.4	–	74.7	74.7
			SHC	–	39.2	52.9	–	37.7	51.4	–	36.1	49.7	–	34.4	47.9	–	32.5	46
3000 Cfm	EA (wb)	58	THC	75.4	75.4	85.3	72.5	72.5	82	69.2	69.2	78.3	65.6	65.6	74.2	61.7	61.7	69.8
			SHC	65.5	75.4	85.3	62.9	72.5	82	60.1	69.2	78.3	57	65.6	74.2	53.5	61.7	69.8
		62	THC	75.5	75.5	88.7	72.5	72.5	85.3	69.3	69.3	81.4	65.7	65.7	77.2	61.7	61.7	72.5
			SHC	62.2	75.5	88.7	59.8	72.5	85.3	57.1	69.3	81.4	54.1	65.7	77.2	50.9	61.7	72.5
		67	THC	81.4	81.4	81.4	77.5	77.5	78.1	73.3	73.3	76.4	68.7	68.7	74.4	63.7	63.7	72.2
			SHC	50.7	65.2	79.7	49.2	63.7	78.1	47.5	61.9	76.4	45.6	60	74.4	43.6	57.9	72.2
		72	THC	89.4	89.4	89.4	85.2	85.2	85.2	80.5	80.5	80.5	75.5	75.5	75.5	70.1	70.1	70.1
			SHC	36.9	51.5	66.1	35.4	50	64.6	33.8	48.3	62.9	32	46.5	61.1	30.1	44.6	59.1
		76	THC	–	96.1	96.1	–	91.6	91.6	–	86.7	86.7	–	81.3	81.3	–	75.5	75.5
			SHC	–	40.4	55.3	–	38.9	53.8	–	37.2	52.1	–	35.5	50.3	–	33.6	48.3

LEGEND:

– – Do not operate
Cfm – Cubic feet per minute (supply air)
EAT(db) – Entering air temperature (dry bulb)
EAT(wb) – Entering air temperature (wet bulb)
SHC – Sensible heat capacity
TC – Total capacity

6 TONS — UNIT WITH HOT GAS REHEAT SYSTEM IN SUBCOOLING MODE										
Temp (F) Air Entering Condenser (Edb)		AIR ENTERING EVAPORATOR — CFM								
		1800 / 0.06			2400 / 0.08			3000 / 0.10		
		Air Entering Evaporator — Ewb (F)								
		72	67	62	72	67	62	72	67	62
75	TC	85.7	77.4	70.0	91.1	82.6	74.9	94.5	85.7	78.4
	SHC	38.2	47.1	56.1	43.9	55.6	67.1	49.0	63.1	76.4
	kW	4.05	4.01	3.97	4.00	4.04	4.08	4.09	4.05	4.02
85	TC	80.9	73.1	66.0	85.9	77.9	70.6	89.2	80.9	73.9
	SHC	33.5	42.9	52.3	38.8	51.1	63.0	43.9	58.6	72.1
	kW	4.46	4.43	4.39	4.42	4.45	4.48	4.51	4.47	4.43
95	TC	75.7	68.4	61.7	80.6	72.9	66.0	83.6	75.7	69.1
	SHC	28.7	38.5	48.3	33.8	46.4	58.7	38.6	53.7	67.6
	kW	4.92	4.89	4.86	4.88	4.91	4.95	4.96	4.92	4.90
105	TC	70.2	63.3	57.0	74.7	67.5	61.1	77.5	70.1	64.0
	SHC	23.6	33.9	44.1	28.4	41.4	54.2	32.9	48.6	62.7
	kW	5.43	5.40	5.37	5.39	5.42	5.45	5.47	5.43	5.41
115	TC	64.3	57.8	52.0	68.4	61.7	55.7	71.0	64.1	58.3
	SHC	18.2	28.9	39.6	22.7	36.2	49.4	27.0	43.1	58.2
	kW	5.99	5.96	5.93	5.95	5.98	6.01	6.02	5.99	5.97
125	TC	57.9	52.0	46.6	61.6	55.4	49.9	64.0	57.5	52.4
	SHC	12.4	23.8	34.9	16.6	30.7	44.3	20.7	37.3	52.4
	kW	6.59	6.57	6.55	6.56	6.59	6.61	6.62	6.60	6.58

6 TONS — UNIT WITH HOT GAS REHEAT SYSTEM IN HOT GAS REHEAT MODE										
Temp (F) Air Entering Condenser (Edb)		AIR ENTERING EVAPORATOR — Ewb (F)								
		75 Dry Bulb			75 Dry Bulb			75 Dry Bulb		
		62.5 Wet Bulb			64 Wet Bulb			65.3 Wet Bulb		
		(50% Relative)			(56% Relative)			(60% Relative)		
		Air Entering Evaporator — Cfm								
		1800	2400	3000	1800	2400	3000	1800	2400	3000
80	TC	24.17	25.88	26.92	25.35	27.08	28.15	26.39	28.18	29.25
	SHC	–1.44	2.99	7.86	–5.08	–1.55	2.50	–8.25	–5.47	–2.14
	kW	4.15	4.16	4.17	4.17	4.18	4.18	4.18	4.19	4.20
75	TC	26.03	27.87	28.95	27.27	29.11	30.21	28.36	30.24	31.35
	SHC	0.43	4.97	9.86	–3.12	0.49	4.56	–6.19	–3.36	–0.03
	kW	3.96	3.97	3.98	3.98	3.99	4.00	4.00	4.01	4.01
70	TC	26.50	28.76	30.07	27.92	29.99	31.34	29.45	31.67	33.23
	SHC	0.87	5.84	10.97	–2.49	1.35	5.68	–5.06	–1.85	1.94
	kW	3.97	3.93	3.91	3.96	3.95	3.93	3.92	3.89	3.87
60	TC	27.59	29.22	30.17	28.70	30.33	31.30	31.50	31.32	32.91
	SHC	1.91	6.25	11.02	–1.79	1.63	5.57	–3.31	–2.39	1.45
	kW	3.95	3.99	4.01	3.99	4.02	4.04	4.09	4.05	4.01
50	TC	27.77	29.18	30.03	28.75	30.18	32.02	29.63	32.07	32.96
	SHC	2.03	6.18	10.85	–1.80	1.43	6.25	–5.14	–1.69	1.45
	kW	4.03	4.08	4.11	4.07	4.12	4.05	4.12	4.06	4.09
40	TC	29.02	30.38	31.46	29.96	31.32	32.09	30.79	33.49	34.34
	SHC	3.26	7.34	10.07	–0.63	2.54	6.29	–4.01	–0.30	2.80
	kW	3.96	4.02	4.08	4.01	4.08	4.11	4.06	4.00	4.03

LEGEND

Edb – Entering Dry–Bulb
Ewb – Entering Wet–Bulb
kW – Compressor Motor Power Input
Idb – Leaving Dry–Bulb
Iwb – Leaving Wet–Bulb
SHC – Sensible Heat Capacity (1000 Btuh) Gross
TC – Total Capacity (1000 Btuh) Gross

NOTES:

Direct interpolation is permissible. Do not extrapolate.

The following formulas may be used:

$$t_{ldb} = t_{edb} - \frac{\text{sensible capacity (Btuh)}}{1.10 \times \text{cfm}}$$

t_{lwb} = Wet–bulb temperature corresponding to enthalpy of air leaving evaporator coil (h_{lwb})

$$h_{lwb} = h_{ewb} - \frac{\text{total capacity (Btuh)}}{4.5 \times \text{cfm}}$$

Where: h_{ewb} = Enthalpy of air entering evaporator coil

Table 20 – COOLING CAPACITIES 2 STAGE COOLING 7.5 TONS

RGH090				AMBIENT TEMPERATURE														
				85			95			105			115			125		
				EA (dB)			EA (dB)			EA (dB)			EA (dB)			EA (dB)		
				75	80	85	75	80	85	75	80	85	75	80	85	75	80	85
2250 Cfm	EA (wb)	58	THC	81	81	91.8	77.9	77.9	88.4	74.7	74.7	84.6	71.1	71.1	80.6	67.3	67.3	76.3
			SHC	70.2	81	91.8	67.5	77.9	88.4	64.7	74.7	84.6	61.6	71.1	80.6	58.3	67.3	76.3
		62	THC	85.1	85.1	87.2	81.1	81.1	85.3	76.9	76.9	83.2	72.5	72.5	81	67.8	67.8	78.5
			SHC	63.3	75.3	87.2	61.4	73.4	85.3	59.5	71.3	83.2	57.3	69.2	81	55	66.7	78.5
		67	THC	93.3	93.3	93.3	89	89	89	84.3	84.3	84.3	79.4	79.4	79.4	74.1	74.1	74.1
			SHC	52.3	64.2	76.2	50.4	62.4	74.4	48.4	60.4	72.4	46.4	58.3	70.3	44.2	56.2	68.1
		72	THC	102.3	102.3	102.3	97.5	97.5	97.5	92.5	92.5	92.5	87.1	87.1	87.1	81.3	81.3	81.3
			SHC	40.9	53	65	39	51.1	63.1	37.1	49.2	61.2	35.1	47.1	59.1	32.9	44.9	57
		76	THC	–	110	110	–	104.8	104.8	–	99.4	99.4	–	93.5	93.5	–	87.3	87.3
			SHC	–	43.7	56.1	–	41.9	54.2	–	39.9	52.2	–	37.9	50.2	–	35.8	48
2625 Cfm	EA (wb)	58	THC	85.4	85.4	96.9	82.1	82.1	93.1	78.6	78.6	89.1	74.7	74.7	84.7	70.5	70.5	80
			SHC	74	85.4	96.9	71.2	82.1	93.1	68.1	78.6	89.1	64.7	74.7	84.7	61.1	70.5	80
		62	THC	87.8	87.8	95.7	83.7	83.7	93.6	79.3	79.3	91.3	75	75	87.8	70.6	70.6	83.2
			SHC	68.2	82	95.7	66.2	79.9	93.6	64.1	77.7	91.3	61.3	74.6	87.8	58	70.6	83.2
		67	THC	96	96	96	91.4	91.4	91.4	86.5	86.5	86.5	81.3	81.3	81.3	75.8	75.8	75.8
			SHC	55.4	69.3	83.2	53.5	67.4	81.2	51.5	65.4	79.2	49.4	63.2	77.1	47.2	61	74.8
		72	THC	105.2	105.2	105.2	100.1	100.1	100.1	94.8	94.8	94.8	89.1	89.1	89.1	83	83	83
			SHC	42.3	56.2	70.2	40.4	54.3	68.2	38.4	52.3	66.2	36.3	50.2	64.1	34.1	48	61.9
		76	THC	–	112.9	112.9	–	107.5	107.5	–	101.7	101.7	–	95.6	95.6	–	89.1	89.1
			SHC	–	45.5	59.8	–	43.6	57.8	–	41.7	55.8	–	39.6	53.7	–	37.4	51.5
3000 Cfm	EA (wb)	58	THC	89.2	89.2	101.1	85.6	85.6	97.1	81.8	81.8	92.8	77.7	77.7	88.1	73.2	73.2	83
			SHC	77.3	89.2	101.1	74.2	85.6	97.1	70.9	81.8	92.8	67.3	77.7	88.1	63.5	73.2	83
		62	THC	90.1	90.1	103.5	86.1	86.1	100.3	81.9	81.9	96.5	77.8	77.8	91.6	73.3	73.3	86.4
			SHC	72.7	88.1	103.5	70.1	85.2	100.3	67.3	81.9	96.5	63.9	77.8	91.6	60.2	73.3	86.4
		67	THC	98.1	98.1	98.1	93.3	93.3	93.3	88.2	88.2	88.2	82.8	82.8	83.6	77	77	81.3
			SHC	58.4	74.1	89.9	56.5	72.2	87.9	54.4	70.1	85.8	52.3	67.9	83.6	50	65.6	81.3
		72	THC	107.3	107.3	107.3	102.1	102.1	102.1	96.5	96.5	96.5	90.6	90.6	90.6	84.3	84.3	84.3
			SHC	43.5	59.3	75.1	41.6	57.3	73.1	39.5	55.3	71.1	37.4	53.2	69	35.2	50.9	66.7
		76	THC	–	115.2	115.2	–	109.5	109.5	–	103.5	103.5	–	97.2	97.2	–	90.4	90.4
			SHC	–	47.2	63.2	–	45.3	61.3	–	43.3	59.3	–	41.2	57.1	–	38.9	54.8
3375 Cfm	EA (wb)	58	THC	92.4	92.4	104.7	88.6	88.6	100.4	84.6	84.6	95.9	80.2	80.2	90.9	75.5	75.5	85.6
			SHC	80	92.4	104.7	76.8	88.6	100.4	73.3	84.6	95.9	69.5	80.2	90.9	65.4	75.5	85.6
		62	THC	92.5	92.5	109	88.7	88.7	104.5	84.6	84.6	99.7	80.3	80.3	94.6	75.6	75.6	89
			SHC	76	92.5	109	72.9	88.7	104.5	69.6	84.6	99.7	66	80.3	94.6	62.1	75.6	89
		67	THC	99.7	99.7	99.7	94.8	94.8	94.8	89.5	89.5	92.2	84	84	89.9	78	78	87.4
			SHC	61.3	78.8	96.4	59.3	76.8	94.3	57.2	74.7	92.2	55	72.4	89.9	52.6	70	87.4
		72	THC	109	109	109	103.6	103.6	103.6	97.8	97.8	97.8	91.8	91.8	91.8	85.3	85.3	85.3
			SHC	44.6	62.2	79.9	42.7	60.3	77.9	40.6	58.2	75.8	38.5	56.1	73.6	36.2	53.8	71.3
		76	THC	–	116.9	116.9	–	111.1	111.1	–	104.9	104.9	–	98.4	98.4	–	91.5	91.5
			SHC	–	48.8	66.6	–	46.8	64.6	–	44.8	62.6	–	42.7	60.4	–	40.4	58.1
3750 Cfm	EA (wb)	58	THC	95.1	95.1	107.8	91.2	91.2	103.3	86.9	86.9	98.5	82.3	82.3	93.3	77.4	77.4	87.8
			SHC	82.4	95.1	107.8	79	91.2	103.3	75.3	86.9	98.5	71.3	82.3	93.3	67.1	77.4	87.8
		62	THC	95.2	95.2	112.2	91.2	91.2	107.5	87	87	102.5	82.4	82.4	97.1	77.5	77.5	91.3
			SHC	78.2	95.2	112.2	75	91.2	107.5	71.5	87	102.5	67.7	82.4	97.1	63.7	77.5	91.3
		67	THC	101.1	101.1	102.6	96	96	100.5	90.6	90.6	98.3	84.9	84.9	95.9	78.9	78.9	93.2
			SHC	64	83.3	102.6	62	81.2	100.5	59.8	79.1	98.3	57.6	76.7	95.9	55.1	74.2	93.2
		72	THC	110.4	110.4	110.4	104.8	104.8	104.8	98.9	98.9	98.9	92.7	92.7	92.7	86.1	86.1	86.1
			SHC	45.7	65.1	84.5	43.7	63.1	82.5	41.7	61	80.4	39.5	58.8	78.2	37.2	56.5	75.9
		76	THC	–	118.3	118.3	–	112.4	112.4	–	106	106	–	99.4	99.4	–	92.3	92.3
			SHC	–	50.3	69.9	–	48.3	67.9	–	46.2	65.8	–	44.1	63.6	–	41.8	61.3

LEGEND:

– – Do not operate
Cfm – Cubic feet per minute (supply air)
EAT(db) – Entering air temperature (dry bulb)
EAT(wb) – Entering air temperature (wet bulb)
SHC – Sensible heat capacity
TC – Total capacity

7.5 TONS — UNIT WITH HOT GAS REHEAT SYSTEM IS SUBCOOLING MODE										
Temp (F) Air Entering Condenser (Edb)		AIR ENTERING EVAPORATOR — CFM								
		2250 / 0.03			3000 / 0.04			3750 / 0.06		
		Air Entering Evaporator — Ewb (F)								
		72	67	62	72	67	62	72	67	62
75	TC	101.9	92.9	84.0	109.6	96.3	89.9	113.6	103.0	94.5
	SHC	43.9	54.6	66.7	50.2	62.7	80.9	56.8	75.8	93.0
	kW	4.60	4.54	4.48	4.65	4.50	4.52	4.68	4.60	4.55
85	TC	96.6	87.3	78.9	102.8	92.9	84.5	106.5	96.7	88.7
	SHC	36.8	49.3	61.9	43.8	59.7	75.9	50.2	69.8	87.4
	kW	5.15	5.09	5.04	5.20	5.13	5.08	5.22	5.16	5.11
95	TC	90.2	81.4	73.5	95.7	86.8	78.8	99.4	90.1	82.7
	SHC	30.8	43.9	56.9	37.2	54.1	70.5	43.6	63.8	81.6
	kW	5.78	5.72	5.67	5.82	5.76	5.71	5.85	5.79	5.74
105	TC	83.5	75.2	67.8	88.8	80.2	72.7	92.0	83.2	76.4
	SHC	24.6	38.2	51.7	30.8	48.0	64.9	36.7	57.4	75.5
	kW	6.50	6.45	6.40	6.54	6.48	6.43	6.57	6.50	6.46
115	TC	76.3	68.7	61.8	81.1	73.2	66.3	84.1	76.0	69.7
	SHC	17.9	32.1	46.2	23.7	41.5	59.0	29.4	50.7	69.0
	kW	7.32	7.28	7.24	7.35	7.31	7.27	7.38	7.32	7.29
125	TC	68.6	61.6	55.4	73.0	65.7	59.3	75.8	68.2	62.6
	SHC	10.9	25.6	40.3	16.2	34.7	52.6	21.7	43.6	62.1
	kW	8.24	8.22	8.20	8.27	8.23	8.21	8.29	8.25	8.22

7.5 TONS — UNIT WITH HOT GAS REHEAT SYSTEM IN HOT GAS REHEAT MODE										
Temp (F) Air Entering Condenser (Edb)		AIR ENTERING EVAPORATOR — Ewb (F)								
		75 Dry Bulb 62.5 Wet Bulb (50% Relative)			75 Dry Bulb 64 Wet Bulb (56% Relative)			75 Dry Bulb 65.3 Wet Bulb (60% Relative)		
		Air Entering Evaporator — Cfm								
		2250	3000	3750	2250	3000	3750	2250	3000	3750
80	TC	24.06	26.14	27.48	25.50	27.56	28.78	26.59	28.71	29.96
	SHC	−5.55	1.16	8.38	−10.20	−4.69	1.40	−14.39	−9.85	−4.68
	kW	4.43	4.42	4.41	4.40	4.41	4.42	4.42	4.43	4.44
75	TC	24.87	27.26	28.47	26.06	28.53	30.02	27.67	29.77	31.02
	SHC	−4.77	2.23	9.32	−9.65	−3.76	2.59	−13.35	−8.83	−3.66
	kW	4.42	4.36	4.38	4.45	4.38	4.36	4.36	4.39	4.40
70	TC	25.16	27.88	28.56	26.72	29.10	30.26	28.17	30.20	31.83
	SHC	−4.48	2.84	9.45	−9.02	−3.19	2.85	−12.88	−8.40	−2.87
	kW	4.49	4.38	4.48	4.44	4.41	4.44	4.40	4.44	4.40
60	TC	26.43	28.14	29.14	27.49	29.24	30.27	28.50	30.24	32.33
	SHC	−3.25	3.14	10.05	−8.26	−2.99	2.94	−12.54	−8.29	−2.32
	kW	4.48	4.55	4.59	4.53	4.60	4.65	4.58	4.65	4.54
50	TC	27.19	29.55	31.26	28.94	30.59	32.36	30.54	31.54	32.52
	SHC	−2.50	4.50	12.05	−6.87	−1.69	4.92	−10.60	−7.02	−2.07
	kW	4.53	4.51	4.46	4.48	4.57	4.52	4.43	4.63	4.70
40	TC	27.92	31.58	32.82	28.81	32.60	33.54	31.82	33.50	34.44
	SHC	−1.79	6.42	10.84	−6.94	0.23	6.05	−9.36	−5.15	−0.25
	kW	4.57	4.37	4.46	4.65	4.45	4.51	4.40	4.51	4.58

LEGEND

Edb – Entering Dry–Bulb
Ewb – Entering Wet–Bulb
kW – Compressor Motor Power Input
Idb – Leaving Dry–Bulb
Iwb – Leaving Wet–Bulb
SHC – Sensible Heat Capacity (1000 Btuh) Gross
TC – Total Capacity (1000 Btuh) Gross

NOTES:

Direct interpolation is permissible. Do not extrapolate.

The following formulas may be used:

$$t_{ldb} = t_{edb} - \frac{\text{sensible capacity (Btuh)}}{1.10 \times \text{cfm}}$$

t_{lwb} = Wet–bulb temperature corresponding to enthalpy of air leaving evaporator coil (h_{lwb})

$$h_{lwb} = h_{ewb} - \frac{\text{total capacity (Btuh)}}{4.5 \times \text{cfm}}$$

Where: h_{ewb} = Enthalpy of air entering evaporator coil

Table 22 – COOLING CAPACITIES 2 STAGE COOLING 8.5 TONS

RGH102				AMBIENT TEMPERATURE														
				85			95			105			115			125		
				EA (dB)			EA (dB)			EA (dB)			EA (dB)			EA (dB)		
				75	80	85	75	80	85	75	80	85	75	80	85	75	80	85
2550 Cfm	EA (wb)	58	THC	90.5	90.5	102.4	87	87	98.5	83.2	83.2	94.2	79.1	79.1	89.6	74.7	74.7	84.6
			SHC	78.6	90.5	102.4	75.5	87	98.5	72.2	83.2	94.2	68.7	79.1	89.6	64.8	74.7	84.6
		62	THC	94.8	94.8	98.1	90.2	90.2	95.8	85.4	85.4	93.4	80.3	80.3	90.8	74.9	74.9	87.8
			SHC	71.2	84.6	98.1	69.1	82.4	95.8	66.8	80.1	93.4	64.3	77.5	90.8	61.6	74.7	87.8
		67	THC	104	104	104	99	99	99	93.7	93.7	93.7	88	88	88	81.9	81.9	81.9
			SHC	58.7	72.2	85.7	56.6	70	83.5	54.3	67.8	81.3	52	65.4	78.9	49.5	62.9	76.4
		72	THC	114	114	114	108.5	108.5	108.5	102.7	102.7	102.7	96.5	96.5	96.5	89.8	89.8	89.8
			SHC	45.8	59.3	72.9	43.7	57.2	70.8	41.4	55	68.5	39.1	52.7	66.2	36.7	50.2	63.7
		76	THC	–	122.4	122.4	–	116.5	116.5	–	110.3	110.3	–	103.7	103.7	–	96.5	96.5
			SHC	–	48.8	62.8	–	46.7	60.6	–	44.5	58.4	–	42.2	56	–	39.8	53.5
2975 Cfm	EA (wb)	58	THC	95.4	95.4	108	91.6	91.6	103.7	87.5	87.5	99	83.1	83.1	94	78.3	78.3	88.6
			SHC	82.8	95.4	108	79.5	91.6	103.7	75.9	87.5	99	72.1	83.1	94	68	78.3	88.6
		62	THC	97.7	97.7	107.4	93	93	104.9	88.1	88.1	102.1	83.2	83.2	97.9	78.4	78.4	92.2
			SHC	76.7	92	107.4	74.3	89.6	104.9	71.8	86.9	102.1	68.6	83.2	97.9	64.6	78.4	92.2
		67	THC	106.9	106.9	106.9	101.6	101.6	101.6	96	96	96	90.1	90.1	90.1	83.7	83.7	83.9
			SHC	62.3	77.8	93.4	60.1	75.6	91.2	57.8	73.3	88.9	55.4	70.9	86.5	52.8	68.3	83.9
		72	THC	117	117	117	111.2	111.2	111.2	105.1	105.1	105.1	98.6	98.6	98.6	91.7	91.7	91.7
			SHC	47.3	62.9	78.6	45.1	60.8	76.4	42.9	58.5	74.1	40.5	56.1	71.7	38	53.6	69.2
		76	THC	–	125.6	125.6	–	119.4	119.4	–	112.8	112.8	–	105.9	105.9	–	98.4	98.4
			SHC	–	50.8	66.8	–	48.7	64.6	–	46.4	62.3	–	44.1	59.9	–	41.6	57.4
3400 Cfm	EA (wb)	58	THC	99.5	99.5	112.7	95.4	95.4	108	91	91	103	86.3	86.3	97.7	81.2	81.2	91.9
			SHC	86.4	99.5	112.7	82.8	95.4	108	79	91	103	74.9	86.3	97.7	70.5	81.2	91.9
		62	THC	100.3	100.3	115.8	95.6	95.6	112.4	91.2	91.2	107.2	86.4	86.4	101.6	81.3	81.3	95.6
			SHC	81.5	98.6	115.8	78.7	95.6	112.4	75.1	91.2	107.2	71.2	86.4	101.6	67	81.3	95.6
		67	THC	109.1	109.1	109.1	103.6	103.6	103.6	97.8	97.8	97.8	91.6	91.6	93.7	85	85	90.9
			SHC	65.6	83.2	100.8	63.4	81	98.6	61	78.6	96.2	58.6	76.1	93.7	55.9	73.4	90.9
		72	THC	119.3	119.3	119.3	113.3	113.3	113.3	107	107	107	100.3	100.3	100.3	93	93	93
			SHC	48.7	66.4	84.1	46.5	64.2	81.8	44.2	61.8	79.5	41.8	59.4	77.1	39.2	56.9	74.5
		76	THC	–	128	128	–	121.5	121.5	–	114.7	114.7	–	107.5	107.5	–	99.8	99.8
			SHC	–	52.6	70.6	–	50.5	68.4	–	48.2	66.1	–	45.8	63.6	–	43.3	61.1
3825 Cfm	EA (wb)	58	THC	103	103	116.6	98.7	98.7	111.7	94	94	106.4	89	89	100.8	83.6	83.6	94.7
			SHC	89.4	103	116.6	85.6	98.7	111.7	81.6	94	106.4	77.3	89	100.8	72.6	83.6	94.7
		62	THC	103.1	103.1	121.3	98.8	98.8	116.1	94.1	94.1	110.7	89.1	89.1	104.8	83.7	83.7	98.4
			SHC	85	103.1	121.3	81.4	98.8	116.1	77.5	94.1	110.7	73.4	89.1	104.8	69	83.7	98.4
		67	THC	110.9	110.9	110.9	105.2	105.2	105.7	99.2	99.2	103.2	92.9	92.9	100.5	86.1	86.1	97.6
			SHC	68.8	88.4	108	66.5	86.1	105.7	64.1	83.7	103.2	61.6	81.1	100.5	58.9	78.3	97.6
		72	THC	121.2	121.2	121.2	114.9	114.9	114.9	108.4	108.4	108.4	101.5	101.5	101.5	94.1	94.1	94.1
			SHC	50	69.7	89.4	47.7	67.4	87.1	45.4	65.1	84.7	43	62.6	82.3	40.4	60	79.6
		76	THC	–	129.8	129.8	–	123.2	123.2	–	116.2	116.2	–	108.8	108.8	–	100.9	100.9
			SHC	–	54.4	74.3	–	52.2	72.1	–	49.9	69.7	–	47.5	67.3	–	44.9	64.7
4250 Cfm	EA (wb)	58	THC	106	106	119.9	101.4	101.4	114.8	96.6	96.6	109.3	91.3	91.3	103.4	85.7	85.7	97
			SHC	92	106	119.9	88	101.4	114.8	83.8	96.6	109.3	79.3	91.3	103.4	74.4	85.7	97
		62	THC	106.1	106.1	124.7	101.5	101.5	119.4	96.6	96.6	113.6	91.4	91.4	107.5	85.7	85.7	100.8
			SHC	87.4	106.1	124.7	83.6	101.5	119.4	79.6	96.6	113.6	75.3	91.4	107.5	70.6	85.7	100.8
		67	THC	112.3	112.3	114.9	106.5	106.5	112.5	100.4	100.4	109.9	93.9	93.9	107	87.1	87.1	103.8
			SHC	71.8	93.4	114.9	69.5	91	112.5	67	88.5	109.9	64.4	85.7	107	61.6	82.7	103.8
		72	THC	122.6	122.6	122.6	116.2	116.2	116.2	109.5	109.5	109.5	102.5	102.5	102.5	94.9	94.9	94.9
			SHC	51.2	72.8	94.5	48.9	70.5	92.2	46.6	68.2	89.8	44.1	65.7	87.3	41.5	63.1	84.6
		76	THC	–	131.3	131.3	–	124.5	124.5	–	117.4	117.4	–	109.8	109.8	–	101.8	101.8
			SHC	–	56	77.9	–	53.8	75.6	–	51.5	73.3	–	49.1	70.8	–	46.5	68.1

LEGEND:

– – Do not operate
Cfm – Cubic feet per minute (supply air)
EAT(db) – Entering air temperature (dry bulb)
EAT(wb) – Entering air temperature (wet bulb)
SHC – Sensible heat capacity
TC – Total capacity

8.5 TONS — UNIT WITH HOT GAS REHEAT SYSTEM IN SUBCOOLING MODE										
Temp (F) Air Entering Condenser (Edb)		AIR ENTERING EVAPORATOR — CFM								
		2550 / 0.04			3400 / 0.06			4250 / 0.08		
		Air Entering Evaporator — Ewb (F)								
		72	67	62	72	67	62	72	67	62
75	TC	114.7	103.9	93.9	104.3	110.6	100.5	122.9	114.6	105.5
	SHC	48.7	62.2	75.7	84.7	74.2	91.4	60.6	85.1	103.9
	kW	5.17	5.09	5.01	5.10	5.14	5.07	5.20	5.18	5.11
85	TC	107.8	97.4	88.0	114.2	102.9	94.2	116.2	107.6	98.7
	SHC	42.3	56.3	70.3	49.7	67.0	85.6	61.1	78.7	97.3
	kW	5.79	5.71	5.63	5.85	5.75	5.69	5.88	5.80	5.72
95	TC	100.5	90.8	82.0	106.6	96.2	87.7	110.2	100.1	92.2
	SHC	35.6	50.2	64.8	42.8	61.0	79.6	49.2	71.9	91.0
	kW	6.50	6.42	6.34	6.56	6.46	6.40	6.59	6.50	6.44
105	TC	92.7	83.8	75.7	98.5	89.0	80.9	102.1	92.4	85.1
	SHC	28.5	43.9	59.1	35.4	54.6	73.4	41.9	64.9	84.2
	kW	7.30	7.23	7.16	7.36	7.28	7.21	7.40	7.31	7.25
115	TC	85.0	76.5	69.0	90.0	81.3	73.8	93.3	84.4	77.7
	SHC	21.5	37.4	53.1	27.7	47.6	66.9	34.0	57.7	77.0
	kW	8.23	8.16	8.10	8.27	8.20	8.14	8.31	8.23	8.18
125	TC	76.5	68.8	61.8	81.1	72.9	66.2	84.1	75.8	69.8
	SHC	13.8	30.4	46.7	19.7	40.0	60.1	25.6	50.0	69.8
	kW	9.25	9.20	9.16	9.28	9.22	9.19	9.31	9.25	9.21

8.5 TONS — UNIT WITH HOT GAS REHEAT SYSTEM IN HOT GAS REHEAT MODE										
Temp (F) Air Entering Condenser (Edb)		AIR ENTERING EVAPORATOR — Ewb (F)								
		75 Dry Bulb 62.5 Wet Bulb (50% Relative)			75 Dry Bulb 64 Wet Bulb (56% Relative)			75 Dry Bulb 65.3 Wet Bulb (60% Relative)		
		Air Entering Evaporator — Cfm								
		2550	3400	4250	2550	3400	4250	2550	3400	4250
80	TC	27.53	29.56	30.72	28.95	31.03	32.22	30.26	32.33	33.58
	SHC	−3.84	3.82	11.92	−9.25	−2.92	4.09	−13.93	−8.77	−2.82
	kW	5.09	5.11	5.13	5.11	5.14	5.15	5.14	5.15	5.17
75	TC	29.09	31.60	32.81	30.77	33.10	34.33	32.30	34.45	35.73
	SHC	−2.34	5.72	13.84	−7.51	−0.98	6.04	−11.95	−6.78	−0.82
	kW	4.97	4.91	4.93	4.95	4.94	4.95	4.94	4.96	4.97
70	TC	29.58	32.45	33.63	31.48	34.12	35.55	33.12	35.65	37.38
	SHC	−1.88	6.54	14.63	−6.83	0.00	7.20	−11.16	−5.63	0.75
	kW	4.99	4.90	4.92	4.96	4.90	4.89	4.93	4.90	4.86
60	TC	30.71	33.44	34.52	32.90	34.79	35.86	34.07	36.02	37.09
	SHC	−0.78	7.52	15.54	−5.47	0.68	7.57	−10.28	−5.24	0.55
	kW	5.03	4.95	5.00	4.94	5.01	5.05	4.99	5.06	5.09
50	TC	32.63	34.31	35.26	33.81	35.53	36.51	34.90	36.66	37.65
	SHC	1.05	8.38	16.29	−4.60	1.42	8.24	−9.49	−4.59	1.14
	kW	4.92	5.01	5.06	4.99	5.07	5.13	5.05	5.14	5.19
40	TC	31.94	33.26	35.77	32.96	35.70	37.86	35.17	38.01	38.92
	SHC	0.45	7.47	13.75	−5.35	1.63	9.52	−9.20	−3.29	2.36
	kW	5.16	5.27	5.20	5.25	5.19	5.10	5.16	5.11	5.17

LEGEND

Edb – Entering Dry–Bulb
Ewb – Entering Wet–Bulb
kW – Compressor Motor Power Input
Idb – Leaving Dry–Bulb
Iwb – Leaving Wet–Bulb
SHC – Sensible Heat Capacity (1000 Btuh) Gross
TC – Total Capacity (1000 Btuh) Gross

NOTES:

Direct interpolation is permissible. Do not extrapolate.

The following formulas may be used:

$$t_{ldb} = t_{edb} - \frac{\text{sensible capacity (Btuh)}}{1.10 \times \text{cfm}}$$

t_{lwb} = Wet–bulb temperature corresponding to enthalpy of air leaving evaporator coil (h_{lwb})

$$h_{lwb} = h_{ewb} - \frac{\text{total capacity (Btuh)}}{4.5 \times \text{cfm}}$$

Where: h_{ewb} = Enthalpy of air entering evaporator coil

Table 24 – COOLING CAPACITIES 2 STAGE COOLING 10 TONS (12.0 EER)

RGH110				AMBIENT TEMPERATURE														
				85			95			105			115			125		
				EA (dB)			EA (dB)			EA (dB)			EA (dB)			EA (dB)		
				75	80	85	75	80	85	75	80	85	75	80	85	75	80	85
3000 Cfm	EA (wB)	58	THC	105.6	105.6	118.0	101.7	101.7	114.1	97.5	97.5	109.9	97.5	97.5	109.9	87.8	87.8	100.2
			SHC	93.3	105.6	118.0	89.4	101.7	114.1	85.1	97.5	109.9	85.1	97.5	109.9	75.4	87.8	100.2
		62	THC	110.6	110.6	110.6	105.5	105.5	108.0	100.1	100.1	105.5	100.1	100.1	105.5	88.5	88.5	98.5
			SHC	85.6	98.0	110.3	83.3	95.7	108.0	80.7	93.1	105.5	80.7	93.1	105.5	73.8	86.1	98.5
		67	THC	120.5	120.5	120.5	115.0	115.0	115.0	109.0	109.0	109.0	109.0	109.0	109.0	95.7	95.7	95.7
			SHC	70.0	82.3	94.7	67.7	80.1	92.5	65.4	77.8	90.1	65.4	77.8	90.1	60.0	72.4	84.8
		72	THC	131.4	131.4	131.4	125.4	125.4	125.4	118.8	118.8	118.8	118.8	118.8	118.8	104.2	104.2	104.2
			SHC	53.9	66.3	78.7	51.8	64.2	76.6	49.5	61.9	74.3	49.5	61.9	74.3	44.3	56.7	69.1
		76	THC	–	140.8	140.8	–	134.2	134.2	–	127.0	127.0	–	127.0	127.0	–	111.5	111.5
			SHC	–	52.5	64.9	–	50.8	63.2	–	48.7	61.1	–	48.7	61.1	–	44.0	56.4
3500 Cfm	EA (wB)	58	THC	110.9	110.9	125.3	106.7	106.7	121.1	102.1	102.1	116.5	102.1	102.1	116.5	91.6	91.6	106.0
			SHC	96.4	110.9	125.3	92.2	106.7	121.1	87.6	102.1	116.5	87.6	102.1	116.5	77.1	91.6	106.0
		62	THC	113.6	113.6	120.7	108.4	108.4	118.1	103.1	103.1	114.5	103.1	103.1	114.5	92.0	92.0	105.3
			SHC	91.9	106.3	120.7	89.3	103.7	118.1	85.7	100.1	114.5	85.7	100.1	114.5	76.4	90.8	105.3
		67	THC	123.5	123.5	123.5	117.8	117.8	117.8	111.5	111.5	111.5	111.5	111.5	111.5	97.6	97.6	97.6
			SHC	74.2	88.6	103.1	72.2	86.6	101.0	69.8	84.3	98.7	69.8	84.3	98.7	64.3	78.8	93.2
		72	THC	134.6	134.6	134.6	128.2	128.2	128.2	121.3	121.3	121.3	121.3	121.3	121.3	106.1	106.1	106.1
			SHC	55.9	70.3	84.8	53.7	68.1	82.6	51.4	65.8	80.2	51.4	65.8	80.2	46.1	60.6	75.0
		76	THC	–	144.0	144.0	–	137.1	137.1	–	129.7	129.7	–	129.7	129.7	–	113.5	113.5
			SHC	–	55.3	69.7	–	53.1	67.6	–	50.9	65.4	–	50.9	65.4	–	46.0	60.5
4000 Cfm	EA (wB)	58	THC	115.3	115.3	131.8	110.7	110.7	127.2	105.8	105.8	122.3	105.8	105.8	122.3	94.6	94.6	111.1
			SHC	98.8	115.3	131.8	94.2	110.7	127.2	89.3	105.8	122.3	89.3	105.8	122.3	78.1	94.6	111.1
		62	THC	116.5	116.5	129.1	112.0	112.0	124.0	106.5	106.5	120.9	106.5	106.5	120.9	94.7	94.7	111.2
			SHC	96.1	112.6	129.1	91.0	107.5	124.0	87.9	104.4	120.9	87.9	104.4	120.9	78.2	94.7	111.2
		67	THC	125.9	125.9	125.9	119.8	119.8	119.8	113.3	113.3	113.3	113.3	113.3	113.3	99.1	99.1	101.1
			SHC	78.2	94.7	111.2	76.0	92.5	109.0	73.5	90.0	106.5	73.5	90.0	106.5	68.1	84.6	101.1
		72	THC	137.0	137.0	137.0	130.3	130.3	130.3	123.2	123.2	123.2	123.2	123.2	123.2	107.5	107.5	107.5
			SHC	57.7	74.2	90.7	55.4	71.9	88.4	53.0	69.5	86.0	53.0	69.5	86.0	47.7	64.2	80.7
		76	THC	–	146.5	146.5	–	139.3	139.3	–	131.6	131.6	–	131.6	131.6	–	115.0	115.0
			SHC	–	57.4	73.9	–	55.3	71.8	–	53.0	69.5	–	53.0	69.5	–	48.0	64.5
4500 Cfm	EA (wB)	58	THC	118.9	118.9	137.5	114.1	114.1	132.7	108.9	108.9	127.5	108.9	108.9	127.5	97.2	97.2	115.8
			SHC	100.3	118.9	137.5	95.5	114.1	132.7	90.3	108.9	127.5	90.3	108.9	127.5	78.6	97.2	115.8
		62	THC	119.9	119.9	135.3	115.0	115.0	130.8	109.2	109.2	126.7	109.2	109.2	126.7	97.2	97.2	115.8
			SHC	98.2	116.8	135.3	93.7	112.3	130.8	89.6	108.2	126.7	89.6	108.2	126.7	78.7	97.2	115.8
		67	THC	127.7	127.7	127.7	121.4	121.4	121.4	114.8	114.8	114.8	114.8	114.8	114.8	100.1	100.1	108.5
			SHC	82.1	100.7	119.3	79.8	98.3	116.9	77.2	95.8	114.4	77.2	95.8	114.4	71.4	89.9	108.5
		72	THC	138.9	138.9	138.9	132.1	132.1	132.1	124.7	124.7	124.7	124.7	124.7	124.7	108.6	108.6	108.6
			SHC	59.3	77.9	96.5	57.2	75.7	94.3	54.8	73.3	91.9	54.8	73.3	91.9	49.3	67.9	86.5
		76	THC	–	148.4	148.4	–	141.1	141.1	–	133.2	133.2	–	133.2	133.2	–	116.1	116.1
			SHC	–	59.4	78.0	–	57.2	75.8	–	54.9	73.5	–	54.9	73.5	–	49.9	68.4
5000 Cfm	EA (wB)	58	THC	122.0	122.0	142.6	117.0	117.0	137.6	111.6	111.6	132.2	111.6	111.6	132.2	99.3	99.3	119.9
			SHC	101.4	122.0	142.6	96.4	117.0	137.6	90.9	111.6	132.2	90.9	111.6	132.2	78.7	99.3	119.9
		62	THC	122.7	122.7	141.4	117.1	117.1	137.7	111.6	111.6	132.2	111.6	111.6	132.2	99.4	99.4	120.0
			SHC	100.2	120.8	141.4	96.4	117.1	137.7	91.0	111.6	132.2	91.0	111.6	132.2	78.8	99.4	120.0
		67	THC	129.2	129.2	129.2	122.8	122.8	124.6	115.9	115.9	121.9	115.9	115.9	121.9	101.1	101.1	115.7
			SHC	85.7	106.4	127.0	83.3	104.0	124.6	80.7	101.3	121.9	80.7	101.3	121.9	74.4	95.1	115.7
		72	THC	140.5	140.5	140.5	133.4	133.4	133.4	125.9	125.9	125.9	125.9	125.9	125.9	109.6	109.6	109.6
			SHC	61.0	81.6	102.3	58.7	79.3	99.9	56.3	76.9	97.5	56.3	76.9	97.5	50.9	71.5	92.1
		76	THC	–	150.1	150.1	–	142.6	142.6	–	134.5	134.5	–	134.5	134.5	–	117.1	117.1
			SHC	–	61.4	82.0	–	59.2	79.8	–	56.8	77.4	–	56.8	77.4	–	51.7	72.3

* See Minimum–Maximum Airflow Ratings in Table 7. Do not operate outside these limits.

LEGEND:

– – Do not operate
Cfm – Cubic feet per minute (supply air)
EAT(db) – Entering air temperature (dry bulb)
EAT(wb) – Entering air temperature (wet bulb)
SHC – Sensible heat capacity
TC – Total capacity

Table 25 – COOLING CAPACITIES 2 STAGE COOLING 10 TONS (11.5 EER)

RGH120				AMBIENT TEMPERATURE													
				85			95			105			115			125	
				EA (dB)			EA (dB)			EA (dB)			EA (dB)			EA (dB)	
				75	80	85	75	80	85	75	80	85	75	80	85	75	80	85
3000 Cfm	EA (wb)	58	THC	104.3	104.3	118.5	99.5	99.5	113	93.4	93.4	106.1	86.7	86.7	98.6	79.7	79.7	90.6
			SHC	90.2	104.3	118.5	86	99.5	113	80.6	93.4	106.1	74.9	86.7	98.6	68.8	79.7	90.6
		62	THC	109.7	109.7	112.4	103.6	103.6	109.5	95.9	95.9	105.9	87.6	87.6	101.2	79.8	79.8	94.4
			SHC	80.8	96.6	112.4	78	93.8	109.5	74.5	90.2	105.9	70.3	85.7	101.2	65.2	79.8	94.4
		67	THC	121.5	121.5	121.5	115.4	115.4	115.4	107.8	107.8	107.8	98.7	98.7	98.7	89.1	89.1	89.1
			SHC	65.2	81	96.9	62.7	78.6	94.5	59.7	75.6	91.5	56.2	72	87.9	52.5	68.3	84.2
		72	THC	133	133	133	127.1	127.1	127.1	120.5	120.5	120.5	112	112	112	102.1	102.1	102.1
			SHC	48.7	64.5	80.4	46.5	62.4	78.3	44.1	60	75.9	41.2	57.1	73	37.8	53.7	69.6
		76	THC	–	140.9	140.9	–	135.1	135.1	–	128.4	128.4	–	121.3	121.3	–	112.5	112.5
			SHC	–	50.6	67.1	–	48.7	65.2	–	46.6	63.1	–	44.3	60.7	–	41.4	57.7
3500 Cfm	EA (wb)	58	THC	109.9	109.9	124.9	104.9	104.9	119.3	98.7	98.7	112.2	91.6	91.6	104.2	84.2	84.2	95.8
			SHC	94.9	109.9	124.9	90.6	104.9	119.3	85.2	98.7	112.2	79	91.6	104.2	72.6	84.2	95.8
		62	THC	112.8	112.8	123.1	106.7	106.7	120	99.5	99.5	115.3	91.7	91.7	108.5	84.3	84.3	99.8
			SHC	86.8	104.9	123.1	83.9	102	120	80	97.6	115.3	74.9	91.7	108.5	68.8	84.3	99.8
		67	THC	124.2	124.2	124.2	118	118	118	110.3	110.3	110.3	101	101	101	91	91	92.5
			SHC	68.4	86.7	104.9	66.1	84.3	102.6	63.2	81.5	99.8	59.6	78	96.3	55.9	74.2	92.5
		72	THC	135.2	135.2	135.2	129.1	129.1	129.1	122.4	122.4	122.4	114.2	114.2	114.2	104.2	104.2	104.2
			SHC	49.2	67.3	85.4	47.1	65.3	83.4	44.8	63	81.2	42	60.4	78.7	38.7	57.1	75.5
		76	THC	–	142.4	142.4	–	136.5	136.5	–	129.6	129.6	–	122.4	122.4	–	114	114
			SHC	–	51.7	70.9	–	49.7	68.7	–	47.5	66.3	–	45.2	63.8	–	42.6	61.2
4000 Cfm	EA (wb)	58	THC	114.3	114.3	130	109.2	109.2	124.2	102.9	102.9	117	95.4	95.4	108.7	87.7	87.7	99.9
			SHC	98.6	114.3	130	94.2	109.2	124.2	88.7	102.9	117	82.2	95.4	108.7	75.5	87.7	99.9
		62	THC	115.3	115.3	132.4	109.6	109.6	128.3	102.9	102.9	121.9	95.5	95.5	113.2	87.8	87.8	104.1
			SHC	91.9	112.2	132.4	88.7	108.5	128.3	84	102.9	121.9	77.9	95.5	113.2	71.5	87.8	104.1
		67	THC	125.8	125.8	125.8	119.5	119.5	119.5	111.9	111.9	111.9	102.4	102.4	104.2	92.2	92.2	100.4
			SHC	71.3	91.8	112.3	69	89.6	110.2	66.2	86.9	107.6	62.8	83.5	104.2	59.1	79.7	100.4
		72	THC	136.3	136.3	136.3	130.2	130.2	130.2	123.4	123.4	123.4	115.4	115.4	115.4	105.3	105.3	105.3
			SHC	49.5	69.7	89.8	47.4	67.7	87.9	45.1	65.5	85.9	42.5	63.1	83.7	39.3	60.1	80.9
		76	THC	–	143.1	143.1	–	137.1	137.1	–	130.1	130.1	–	122.6	122.6	–	114.5	114.5
			SHC	–	52.2	73.2	–	50.2	71.1	–	48	68.7	–	45.7	66.4	–	43.3	64.1
4500 Cfm	EA (wb)	58	THC	117.5	117.5	133.8	112.4	112.4	127.9	106	106	120.7	98.4	98.4	112.1	90.3	90.3	103
			SHC	101.3	117.5	133.8	96.8	112.4	127.9	91.2	106	120.7	84.6	98.4	112.1	77.7	90.3	103
		62	THC	117.6	117.6	139.4	112.5	112.5	133.3	106.1	106.1	125.8	98.5	98.5	116.8	90.4	90.4	107.4
			SHC	95.9	117.6	139.4	91.6	112.5	133.3	86.4	106.1	125.8	80.1	98.5	116.8	73.5	90.4	107.4
		67	THC	126.6	126.6	126.6	120.2	120.2	120.2	112.8	112.8	114.8	103.2	103.2	111.6	93	93	107.6
			SHC	73.7	96.4	119.2	71.5	94.3	117.2	68.9	91.8	114.8	65.6	88.6	111.6	61.8	84.7	107.6
		72	THC	136.7	136.7	136.7	130.5	130.5	130.5	123.6	123.6	123.6	115.7	115.7	115.7	105.7	105.7	105.7
			SHC	49.4	71.6	93.7	47.4	69.7	91.9	45.1	67.5	89.9	42.7	65.4	88.2	39.5	62.6	85.8
		76	THC	–	143.1	143.1	–	137	137	–	129.9	129.9	–	122.4	122.4	–	114.3	114.3
			SHC	–	52.4	75.1	–	50.5	73.1	–	48.2	70.8	–	46	68.5	–	43.7	66.5
5000 Cfm	EA (wb)	58	THC	119.9	119.9	136.7	114.7	114.7	130.7	108.4	108.4	123.6	100.6	100.6	114.8	92.3	92.3	105.4
			SHC	103.2	119.9	136.7	98.6	114.7	130.7	93.2	108.4	123.6	86.4	100.6	114.8	79.2	92.3	105.4
		62	THC	120	120	142.4	114.7	114.7	136.2	108.5	108.5	128.8	100.7	100.7	119.7	92.4	92.4	109.9
			SHC	97.6	120	142.4	93.3	114.7	136.2	88.1	108.5	128.8	81.7	100.7	119.7	74.9	92.4	109.9
		67	THC	126.8	126.8	126.8	120.4	120.4	123.6	113.2	113.2	121.3	103.8	103.8	118.4	93.6	93.6	114
			SHC	75.7	100.6	125.4	73.6	98.6	123.6	71.2	96.2	121.3	68	93.2	118.4	64.2	89.1	114
		72	THC	136.5	136.5	136.5	130.2	130.2	130.2	123.2	123.2	123.2	115.5	115.5	115.5	105.6	105.6	105.6
			SHC	49.1	73.1	97	47.1	71.3	95.4	44.9	69.2	93.5	42.5	67.3	92	39.5	64.9	90.2
		76	THC	–	142.7	142.7	–	136.5	136.5	–	129.4	129.4	–	121.6	121.6	–	113.6	113.6
			SHC	–	52.2	76.7	–	50.4	74.7	–	48.2	72.4	–	45.9	70.1	–	43.7	68.3

LEGEND:

– – Do not operate
Cfm – Cubic feet per minute (supply air)
EAT(db) – Entering air temperature (dry bulb)
EAT(wb) – Entering air temperature (wet bulb)
SHC – Sensible heat capacity
TC – Total capacity

10 TONS — UNIT WITH HOT GAS REHEAT SYSTEM IN SUBCOOLING MODE										
Temp (F) Air Entering Condenser (Edb)		AIR ENTERING EVAPORATOR — CFM								
		3000/0.04			4000/0.06			5000/0.07		
		Air Entering Evaporator — Ewb (F)								
		72	67	62	72	67	62	72	67	62
75	TC	135.8	123.1	111.6	144.0	130.9	119.2	148.7	135.7	122.9
	SHC	56.7	72.8	88.9	66.1	86.9	107.4	74.4	100.1	121.0
	kW	6.42	6.26	6.13	6.54	6.37	6.22	6.61	6.43	6.26
85	TC	127.3	115.4	104.5	134.9	120.1	111.7	139.3	126.9	116.8
	SHC	48.6	65.4	82.1	57.5	76.6	100.2	65.4	91.8	115.0
	kW	7.20	7.04	6.90	7.31	7.11	7.00	7.38	7.21	7.07
95	TC	118.1	106.5	96.9	125.2	113.6	103.6	129.5	117.8	108.4
	SHC	39.9	57.0	74.9	48.3	70.5	92.4	56.2	83.1	106.8
	kW	8.06	7.89	7.76	8.17	8.00	7.86	8.24	8.07	7.93
105	TC	107.3	97.8	87.8	114.5	103.8	94.5	117.6	107.3	99.0
	SHC	29.6	48.7	66.2	38.1	61.3	83.8	44.9	73.1	97.5
	kW	8.99	8.85	8.72	9.11	8.95	8.82	9.16	9.01	8.88
115	TC	95.7	86.3	78.2	102.1	91.3	83.4	105.7	95.8	88.2
	SHC	18.6	37.8	57.1	26.4	49.4	73.2	33.6	62.3	87.0
	kW	10.03	9.89	9.79	10.14	9.97	9.86	10.20	10.05	9.94
125	TC	83.7	75.2	67.7	87.5	80.1	72.5	92.1	83.1	75.2
	SHC	7.3	27.4	47.2	12.5	38.8	62.9	20.6	50.3	74.2
	kW	11.17	11.06	10.98	11.23	11.13	11.03	11.30	11.17	11.07

10 TONS — UNIT WITH HOT GAS REHEAT SYSTEM IN HOT GAS REHEAT MODE										
Temp (F) Air Entering Condenser (Edb)		AIR ENTERING EVAPORATOR — Ewb (F)								
		75 Dry Bulb 62.5 Wet Bulb (50% Relative)			75 Dry Bulb 64 Wet Bulb (56% Relative)			75 Dry Bulb 65.3 Wet Bulb (60% Relative)		
		Air Entering Evaporator — Cfm								
		3000	4000	5000	3000	4000	5000	3000	4000	5000
80	TC	45.83	49.08	50.90	47.62	50.84	52.72	49.16	52.45	54.33
	SHC	4.82	14.45	24.36	−1.60	6.39	14.99	−7.27	−0.59	6.73
	kW	7.33	7.46	7.55	7.40	7.53	7.62	7.46	7.60	7.68
75	TC	48.52	51.89	53.81	50.31	53.74	55.73	51.92	55.47	57.43
	SHC	7.37	17.08	27.08	0.95	9.11	17.81	−4.65	2.25	9.63
	kW	6.93	7.07	7.15	7.00	7.14	7.23	7.06	7.21	7.29
70	TC	51.15	54.66	56.69	52.96	56.60	58.66	54.65	58.34	60.43
	SHC	9.87	19.70	29.80	3.47	11.82	20.57	−2.05	4.98	12.45
	kW	6.56	6.69	6.78	6.62	6.76	6.85	6.68	6.83	6.91
60	TC	52.89	56.41	59.04	55.63	59.10	62.68	58.00	62.31	64.50
	SHC	11.58	21.44	32.07	6.06	14.26	24.41	1.21	8.78	16.36
	kW	6.60	6.80	6.72	6.53	6.71	6.51	6.46	6.48	6.58
50	TC	55.13	59.53	62.75	58.04	62.61	64.69	59.64	64.34	66.41
	SHC	13.77	24.43	35.63	8.41	17.62	26.38	2.80	10.77	18.23
	kW	6.57	6.53	6.44	6.43	6.41	6.54	6.52	6.50	6.64
40	TC	57.08	60.11	64.35	58.75	63.63	65.58	60.16	65.23	69.04
	SHC	15.67	25.05	33.55	9.13	18.64	27.28	3.34	11.67	20.76
	kW	6.51	6.77	6.62	6.64	6.54	6.70	6.75	6.65	6.50

LEGEND

Edb – Entering Dry–Bulb
Ewb – Entering Wet–Bulb
kW – Compressor Motor Power Input
Idb – Leaving Dry–Bulb
Iwb – Leaving Wet–Bulb
SHC – Sensible Heat Capacity (1000 Btuh) Gross
TC – Total Capacity (1000 Btuh) Gross

NOTES:

Direct interpolation is permissible. Do not extrapolate.

The following formulas may be used:

$$t_{ldb} = t_{edb} - \frac{\text{sensible capacity (Btuh)}}{1.10 \times \text{cfm}}$$

t_{lwb} = Wet–bulb temperature corresponding to enthalpy of air leaving evaporator coil (h_{lwb})

$$h_{lwb} = h_{ewb} - \frac{\text{total capacity (Btuh)}}{4.5 \times \text{cfm}}$$

Where: h_{ewb} = Enthalpy of air entering evaporator coil

Table 27 – COOLING CAPACITIES 2 STAGE COOLING 12.5 TONS

RGH150				Ambient Temperature														
				85			95			105			115			125		
				EA (dB)			EA (dB)			EA (dB)			EA (dB)			EA (dB)		
				75	80	85	75	80	85	75	80	85	75	80	85	75	80	85
3750 Cfm	EA (wB)	58	TC	131.9	131.9	149.8	127.0	127.0	144.1	121.5	121.5	137.9	115.4	115.4	131.0	108.7	108.7	123.4
			SHC	114.1	131.9	149.8	109.8	127.0	144.1	105.0	121.5	137.9	99.8	115.4	131.0	94.0	108.7	123.4
		62	TC	138.0	138.0	143.4	131.7	131.7	140.4	124.7	124.7	136.9	117.1	117.1	133.1	109.4	109.4	127.4
			SHC	103.4	123.4	143.4	100.4	120.4	140.4	97.1	117.0	136.9	93.4	113.2	133.1	88.8	108.1	127.4
		67	TC	151.5	151.5	151.5	144.5	144.5	144.5	136.9	136.9	136.9	128.5	128.5	128.5	119.4	119.4	119.4
			SHC	85.1	105.2	125.3	82.1	102.2	122.3	78.9	99.0	119.0	75.4	95.5	115.5	71.7	91.8	111.8
		72	TC	166.1	166.1	166.1	158.5	158.5	158.5	150.2	150.2	150.2	141.1	141.1	141.1	131.3	131.3	131.3
			SHC	66.2	86.5	106.7	63.3	83.6	103.8	60.2	80.4	100.6	56.8	76.9	97.1	53.1	73.3	93.4
		76	TC	–	178.6	178.6	–	170.5	170.5	–	161.6	161.6	–	151.8	151.8	–	141.3	141.3
			SHC	–	71.1	91.8	–	68.3	88.9	–	65.2	85.8	–	61.8	82.5	–	58.2	78.7
4375 Cfm	EA (wB)	58	TC	139.2	139.2	158.0	133.8	133.8	151.9	127.9	127.9	145.2	121.3	121.3	137.7	114.1	114.1	129.5
			SHC	120.4	139.2	158.0	115.7	133.8	151.9	110.6	127.9	145.2	104.9	121.3	137.7	98.7	114.1	129.5
		62	TC	142.4	142.4	157.6	135.8	135.8	154.1	128.9	128.9	149.2	121.7	121.7	142.9	114.2	114.2	134.8
			SHC	111.5	134.5	157.6	108.2	131.2	154.1	104.2	126.7	149.2	99.4	121.1	142.9	93.6	114.2	134.8
		67	TC	155.8	155.8	155.8	148.5	148.5	148.5	140.4	140.4	140.4	131.6	131.6	131.6	122.1	122.1	123.0
			SHC	90.3	113.6	136.8	87.3	110.5	133.8	84.0	107.2	130.5	80.4	103.6	126.8	76.6	99.8	123.0
		72	TC	170.6	170.6	170.6	162.7	162.7	162.7	154.0	154.0	154.0	144.4	144.4	144.4	134.1	134.1	134.1
			SHC	68.5	91.9	115.3	65.5	88.9	112.3	62.3	85.6	109.0	58.8	82.1	105.4	55.1	78.4	101.7
		76	TC	–	183.3	183.3	–	174.8	174.8	–	165.4	165.4	–	155.2	155.2	–	144.3	144.3
			SHC	–	74.3	98.3	–	71.3	95.2	–	68.0	91.9	–	64.6	88.3	–	60.9	84.5
5000 Cfm	EA (wB)	58	TC	145.3	145.3	164.9	139.5	139.5	158.4	133.2	133.2	151.2	126.2	126.2	143.2	118.5	118.5	134.5
			SHC	125.6	145.3	164.9	120.7	139.5	158.4	115.2	133.2	151.2	109.1	126.2	143.2	102.5	118.5	134.5
		62	TC	146.5	146.5	169.3	140.2	140.2	163.9	133.3	133.3	157.4	126.3	126.3	149.1	118.6	118.6	140.0
			SHC	118.3	143.8	169.3	114.1	139.0	163.9	109.3	133.3	157.4	103.5	126.3	149.1	97.2	118.6	140.0
		67	TC	159.1	159.1	159.1	151.5	151.5	151.5	143.1	143.1	143.1	134.0	134.0	137.7	124.2	124.2	133.7
			SHC	95.2	121.6	148.0	92.2	118.5	144.9	88.8	115.1	141.5	85.1	111.4	137.7	81.3	107.5	133.7
		72	TC	174.1	174.1	174.1	165.9	165.9	165.9	156.8	156.8	156.8	146.9	146.9	146.9	136.2	136.2	136.2
			SHC	70.5	97.0	123.5	67.5	94.0	120.5	64.2	90.7	117.1	60.6	87.1	113.5	56.9	83.3	109.6
		76	TC	–	187.0	187.0	–	178.1	178.1	–	168.3	168.3	–	157.7	157.7	–	146.4	146.4
			SHC	–	77.0	104.0	–	74.0	100.9	–	70.7	97.5	–	67.2	93.9	–	63.4	90.0
5625 Cfm	EA (wB)	58	TC	150.4	150.4	170.8	144.4	144.4	163.9	137.7	137.7	156.3	130.3	130.3	147.9	122.2	122.2	138.7
			SHC	130.1	150.4	170.8	124.9	144.4	163.9	119.0	137.7	156.3	112.7	130.3	147.9	105.7	122.2	138.7
		62	TC	150.7	150.7	177.9	144.5	144.5	170.6	137.8	137.8	162.7	130.4	130.4	153.9	122.3	122.3	144.4
			SHC	123.5	150.7	177.9	118.4	144.5	170.6	112.9	137.8	162.7	106.8	130.4	153.9	100.2	122.3	144.4
		67	TC	161.7	161.7	161.7	153.9	153.9	155.6	145.3	145.3	152.1	135.9	135.9	148.2	125.9	125.9	143.9
			SHC	100.0	129.4	158.8	96.8	126.2	155.6	93.4	122.7	152.1	89.7	118.9	148.2	85.6	114.8	143.9
		72	TC	176.9	176.9	176.9	168.3	168.3	168.3	159.0	159.0	159.0	148.8	148.8	148.8	137.9	137.9	137.9
			SHC	72.3	101.9	131.5	69.3	98.8	128.4	66.0	95.5	125.0	62.4	91.8	121.3	58.6	88.0	117.4
		76	TC	–	189.8	189.8	–	180.6	180.6	–	170.6	170.6	–	159.7	159.7	–	148.1	148.1
			SHC	–	79.6	109.7	–	76.5	106.5	–	73.2	103.0	–	69.6	99.2	–	65.7	95.1
6250 Cfm	EA (wB)	58	TC	154.8	154.8	175.8	148.5	148.5	168.6	141.5	141.5	160.6	133.7	133.7	151.8	125.3	125.3	142.3
			SHC	133.9	154.8	175.8	128.4	148.5	168.6	122.3	141.5	160.6	115.6	133.7	151.8	108.4	125.3	142.3
		62	TC	155.0	155.0	183.0	148.6	148.6	175.5	141.6	141.6	167.2	133.9	133.9	158.0	125.4	125.4	148.1
			SHC	127.0	155.0	183.0	121.8	148.6	175.5	116.0	141.6	167.2	109.7	133.9	158.0	102.8	125.4	148.1
		67	TC	163.8	163.8	169.3	155.8	155.8	166.0	147.0	147.0	162.3	137.5	137.5	158.1	127.4	127.4	153.3
			SHC	104.5	136.9	169.3	101.3	133.6	166.0	97.8	130.0	162.3	93.9	126.0	158.1	89.7	121.5	153.3
		72	TC	179.1	179.1	179.1	170.3	170.3	170.3	160.8	160.8	160.8	150.3	150.3	150.3	139.2	139.2	139.2
			SHC	74.1	106.7	139.3	71.0	103.6	136.1	67.7	100.2	132.7	64.1	96.5	128.9	60.2	92.6	124.9
		76	TC	–	192.1	192.1	–	182.7	182.7	–	172.3	172.3	–	161.2	161.2	–	149.4	149.4
			SHC	–	82.1	115.1	–	79.0	111.8	–	75.6	108.2	–	71.9	104.3	–	67.9	100.0

LEGEND:

– – Do not operate
Cfm – Cubic feet per minute (supply air)
EAT(db) – Entering air temperature (dry bulb)
EAT(wb) – Entering air temperature (wet bulb)
SHC – Sensible heat capacity
TC – Total capacity

12.5 TONS — UNIT WITH HOT GAS REHEAT SYSTEM IN SUBCOOLING MODE										
Temp (F) Air Entering Condenser (Edb)		AIR ENTERING EVAPORATOR — CFM								
		3750/0.02			5000/0.04			6250/0.05		
		Air Entering Evaporator — Ewb (F)								
		72	67	62	72	67	62	72	67	62
75	TC	162.0	147.4	132.8	185.6	167.2	148.8	209.5	187.2	164.9
	SHC	85.0	101.4	117.4	96.9	113.0	129.0	106.5	122.4	138.4
	kW	7.70	7.60	7.30	7.90	7.70	7.40	8.10	7.80	7.50
85	TC	154.8	140.9	127.0	171.7	154.4	137.1	188.8	168.0	147.2
	SHC	70.2	90.4	110.6	83.1	103.2	123.2	93.4	113.4	133.3
	kW	8.80	8.70	8.30	8.90	8.70	8.40	9.10	8.80	8.50
95	TC	147.5	134.4	121.2	157.8	141.6	125.4	168.1	148.8	129.6
	SHC	55.5	79.7	103.9	69.3	93.4	117.5	80.4	104.3	128.3
	kW	9.80	9.70	9.30	9.90	9.70	9.50	10.10	9.80	9.60
105	TC	140.3	127.8	115.4	143.8	128.7	113.7	147.4	129.7	111.9
	SHC	40.9	69.0	97.2	55.5	83.6	111.7	67.3	95.3	111.9
	kW	10.80	10.70	10.30	10.90	10.70	10.50	11.10	10.80	10.60
115	TC	133.0	121.3	109.5	129.9	115.9	101.9	126.7	110.5	94.2
	SHC	26.2	58.3	90.4	41.8	73.8	101.9	54.2	86.2	94.2
	kW	11.80	11.70	11.40	11.90	11.70	11.60	12.10	11.80	11.70
125	TC	125.8	114.7	103.7	115.9	103.1	90.2	106.0	91.3	76.6
	SHC	11.5	47.6	83.7	28.0	64.0	90.2	41.2	77.2	76.6
	kW	12.80	12.70	12.40	12.90	12.70	12.60	13.10	12.80	12.70

12.5 TONS — UNIT WITH HOT GAS REHEAT SYSTEM IN HOT GAS REHEAT MODE										
Temp (F) Air Entering Condenser (Edb)		AIR ENTERING EVAPORATOR — Ewb (F)								
		75 Dry Bulb 62.5 Wet Bulb (50% Relative)			75 Dry Bulb 64 Wet Bulb (56% Relative)			75 Dry Bulb 65.3 Wet Bulb (60% Relative)		
		Air Entering Evaporator — Cfm								
		3750	5000	6250	3750	5000	6250	3750	5000	6250
80	TC	57.70	60.00	66.40	60.20	66.80	69.50	64.30	69.10	72.30
	SHC	21.30	27.00	44.00	12.80	22.40	32.50	8.60	16.20	25.50
	kW	8.08	8.15	8.23	8.28	8.34	8.37	8.36	8.43	8.52
75	TC	59.00	61.20	67.90	61.40	68.10	71.00	65.80	70.70	73.70
	SHC	22.40	28.10	44.80	13.50	23.50	33.70	9.30	17.10	26.30
	kW	8.06	8.13	8.21	8.25	8.31	8.34	8.33	8.40	8.49
70	TC	60.40	62.90	69.20	63.10	69.40	72.50	67.00	72.00	75.00
	SHC	23.20	28.90	46.00	14.50	24.30	34.40	10.30	17.90	27.40
	kW	8.04	8.11	8.18	8.23	8.29	8.32	8.31	8.38	8.47
60	TC	63.40	65.70	72.00	65.90	72.30	75.20	70.00	74.80	77.80
	SHC	24.80	30.50	47.80	16.10	25.90	36.00	11.90	19.60	29.00
	kW	8.00	8.07	8.15	8.20	8.25	8.29	8.28	8.35	8.44
50	TC	66.20	68.60	74.30	68.80	74.60	78.20	72.80	77.80	80.70
	SHC	26.60	32.30	49.40	17.70	27.70	37.80	13.50	21.20	30.60
	kW	7.94	8.01	8.08	8.13	8.20	8.23	8.22	8.29	8.38
40	TC	69.10	71.60	77.80	71.80	78.00	81.00	75.70	80.60	83.70
	SHC	28.20	33.90	50.10	19.40	29.30	39.80	15.20	22.90	32.20
	kW	7.90	7.97	8.04	8.09	8.15	8.17	8.16	8.23	8.32

LEGEND

Edb – Entering Dry–Bulb
Ewb – Entering Wet–Bulb
kW – Compressor Motor Power Input
Idb – Leaving Dry–Bulb
Iwb – Leaving Wet–Bulb
SHC – Sensible Heat Capacity (1000 Btuh) Gross
TC – Total Capacity (1000 Btuh) Gross

NOTES:

Direct interpolation is permissible. Do not extrapolate.

The following formulas may be used:

$$t_{ldb} = t_{edb} - \frac{\text{sensible capacity (Btuh)}}{1.10 \times \text{cfm}}$$

t_{lwb} = Wet–bulb temperature corresponding to enthalpy of air leaving evaporator coil (h_{lwb})

$$h_{lwb} = h_{ewb} - \frac{\text{total capacity (Btuh)}}{4.5 \times \text{cfm}}$$

Where: h_{ewb} = Enthalpy of air entering evaporator coil

TABLE 29 – STATIC PRESSURE ADDERS (IN. WG) (FACTORY OPTIONS AND/OR ACCESSORIES)

Hot Gas Reheat

3–6 TONS									
CFM (in. wg)	1000	1250	1500	1750	2000	2250	2500	2750	3000
3 Tons	0.04	0.052	0.07	–	–	–	–	–	–
4 Tons	–	0.106	0.138	0.172	0.21	–	–	–	–
5 Tons	–	–	0.138	0.172	0.21	0.252	0.30	–	–
6 Tons	–	–	–	0.112	0.125	0.161	0.19	0.22	0.25

	7.5–12.5 TONS									
CFM (in. wg)	4000	4250	4500	4750	5000	5250	5500	5750	6000	6250
7.5 Tons	–	–	–	–	–	–	–	–	–	–
8.5 Tons	0.20	0.22	–	–	–	–	–	–	–	–
10 Tons	0.20	0.22	0.24	0.26	0.28	–	–	–	–	–
12.5 Tons	0.06	0.07	0.07	0.08	0.08	0.09	0.10	0.10	0.11	0.12

General fan performance notes:

1. Interpolation is permissible. Do not extrapolate.
2. External static pressure is the static pressure difference between the return duct and the supply duct plus the static pressure caused by any FIOPs or accessories.
3. Tabular data accounts for pressure loss due to clean filters, unit casing, and wet coils. Factory options and accessories may add static pressure losses. Selection software is available, through your salesperson, to help you select the best motor/drive combination for your application.
4. The Fan Performance tables offer motor/drive recommendations. In cases when two motor/drive combinations would work,the lower horsepower options recommended.
5. For information on the electrical properties of motors, please see the Electrical information section of this book.
6. For more information on the performance limits of motors, see the application data section of this book.
7. The EPACT (Energy Policy Act of 1992) regulates energy requirements for specific types of indoor fan motors. Motors regulated by EPACT include any general purpose, T–frame (three–digit, 143 and larger), single–speed, foot mounted, polyphase, squirrel cage induction motors of NEMA (National Electrical Manufacturers Association) design A and B, manufactured for use in the United States. Ranging from 1 to 200 Hp, these continuous–duty motors operate on 230 and 460 volt, 60 Hz power. If a motor does not fit into these specifications, the motor does not have to be replaced by an EPACT compliant energy–efficient motor. Variable–speed motors are exempt from EPACT compliance requirements. Therefore, the indoor fan motors for RGH036–150 units are exempt from these requirements.

FAN PERFORMANCE

Table 30 – RGH036, 3 PHASE, 3 TON HORIZONTAL SUPPLY – NO HOT GAS REHEAT

CFM	Available External Static Pressure (in. wg)									
	0.2		0.4		0.6		0.8		1.0	
	RPM	BHP	RPM	BHP	RPM	BHP	RPM	BHP	RPM	BHP
900	**582**	**0.14**	**715**	**0.24**	825	0.35	921	0.48	1007	0.63
975	**606**	**0.16**	**735**	**0.26**	843	0.38	938	0.51	1023	0.66
1050	**630**	**0.18**	**756**	**0.29**	862	0.41	955	0.55	1040	0.70
1125	**655**	**0.21**	778	0.32	882	0.45	974	0.58	1057	0.74
1200	**681**	**0.24**	800	0.35	902	0.48	992	0.63	1074	0.78
1275	**708**	**0.27**	823	0.39	923	0.53	1012	0.67	1093	0.83
1350	**735**	**0.31**	847	0.43	945	0.57	1032	0.72	1112	0.88
1425	**762**	**0.35**	871	0.48	967	0.62	1053	0.77	1131	0.94
1500	790	0.40	896	0.53	990	0.67	1074	0.83	1151	1.00

CFM	Available External Static Pressure (in. wg)									
	1.2		1.4		1.6		1.8		2.0	
	RPM	BHP	RPM	BHP	RPM	BHP	RPM	BHP	RPM	BHP
900	1086	0.79	1159	0.96	1228	1.14	1293	1.33	1354	1.53
975	1101	0.82	1174	0.99	1242	1.18	1306	1.37	1367	1.57
1050	1117	0.86	1189	1.03	1256	1.22	1320	1.41	1381	1.62
1125	1133	0.90	1204	1.08	1271	1.26	1335	1.46	1395	1.67
1200	1150	0.95	1221	1.13	1287	1.31	1350	1.51	1410	1.72
1275	1168	1.00	1237	1.18	1303	1.37	1365	1.57	1425	1.78
1350	1186	1.05	1255	1.24	1320	1.43	1382	1.63	1441	1.84
1425	1204	1.11	1272	1.30	1337	1.49	1398	1.70	1457	1.91
1500	1223	1.18	1291	1.36	1355	1.56	1415	1.77	**1473**	**1.99**

NOTE: For more information, see General Fan Performance Notes.
Boldface indicates field−supplied drive is required.
Medium static 770−1175 RPM, 1.2 BHP max
High static 1035−1466 RPM, 2.4 BHP max

TABLE 31 – RGH036 3 PHASE WITH HOT GAS REHEAT 3 TON HORIZONTAL SUPPLY

CFM	Available External Static Pressure (in. wg)									
	0.2		0.4		0.6		0.8		1.0	
	RPM	BHP	RPM	BHP	RPM	BHP	RPM	BHP	RPM	BHP
900	582	0.14	715	0.24	825	0.35	921	0.48	1007	0.63
975	606	0.16	735	0.26	843	0.38	938	0.51	1023	0.66
1050	630	0.18	756	0.29	862	0.41	955	0.55	1040	0.70
1125	655	0.21	778	0.32	882	0.45	974	0.58	1057	0.74
1200	681	0.24	800	0.35	902	0.48	992	0.63	1074	0.78
1275	708	0.27	823	0.39	923	0.53	1012	0.67	1093	0.83
1350	735	0.31	847	0.43	945	0.57	1032	0.72	1112	0.88
1425	762	0.35	871	0.48	967	0.62	1053	0.77	1131	0.94
1500	790	0.40	896	0.53	990	0.67	1074	0.83	1151	1.00

CFM	Available External Static Pressure (in. wg)									
	1.2		1.4		1.6		1.8		2.0	
	RPM	BHP	RPM	BHP	RPM	BHP	RPM	BHP	RPM	BHP
900	1086	0.79	1159	0.96	1228	1.14	1293	1.33	1354	1.53
975	1101	0.82	1174	0.99	1242	1.18	1306	1.37	1367	1.57
1050	1117	0.86	1189	1.03	1256	1.22	1320	1.41	1381	1.62
1125	1133	0.90	1204	1.08	1271	1.26	1335	1.46	1395	1.67
1200	1150	0.95	1221	1.13	1287	1.31	1350	1.51	1410	1.72
1275	1168	1.00	1237	1.18	1303	1.37	1365	1.57	1425	1.78
1350	1186	1.05	1255	1.24	1320	1.43	1382	1.63	1441	1.84
1425	1204	1.11	1272	1.30	1337	1.49	1398	1.70	1457	1.91
1500	1223	1.18	1291	1.36	1355	1.56	1415	1.77	**1473**	**1.99**

NOTE: For more information, see General Fan Performance Notes.
Boldface indicates field−supplied drive is required.

Standard static 560−864 RPM, 1.2 BHP max
Medium static 770−1175 RPM, 1.2 BHP max
High static 1035−1466 RPM, 2.4 BHP max

Table 32 – RGH036, 3 PHASE, 3 TON VERTICAL SUPPLY – NO HOT GAS REHEAT

CFM	Available External Static Pressure (in. wg)									
	0.2		0.4		0.6		0.8		1.0	
	RPM	BHP	RPM	BHP	RPM	BHP	RPM	BHP	RPM	BHP
900	**592**	**0.14**	**721**	**0.25**	826	0.38	916	0.53	997	0.69
975	**616**	**0.17**	**744**	**0.28**	847	0.41	936	0.56	1016	0.72
1050	**641**	**0.19**	**766**	**0.30**	868	0.44	957	0.59	1036	0.76
1125	**667**	**0.22**	790	0.33	890	0.47	978	0.63	1056	0.80
1200	**693**	**0.25**	813	0.37	913	0.51	999	0.67	1077	0.84
1275	**720**	**0.29**	837	0.41	935	0.55	1021	0.71	1098	0.88
1350	**747**	**0.33**	862	0.45	958	0.60	1043	0.76	1119	0.94
1425	775	0.37	887	0.50	982	0.65	1066	0.81	1141	0.99
1500	802	0.42	912	0.55	1006	0.70	1088	0.87	1163	1.05

CFM	Available External Static Pressure (in. wg)									
	1.2		1.4		1.6		1.8		2.0	
	RPM	BHP	RPM	BHP	RPM	BHP	RPM	BHP	RPM	BHP
900	1070	0.88	1137	1.07	1201	1.29	1260	1.51	1317	1.75
975	1089	0.91	1156	1.11	1219	1.32	1279	1.54	1335	1.78
1050	1108	0.94	1175	1.14	1238	1.36	1297	1.58	1353	1.82
1125	1128	0.98	1195	1.18	1257	1.40	1316	1.62	1372	1.86
1200	1148	1.03	1214	1.23	1276	1.44	1335	1.67	1391	1.91
1275	1169	1.07	1235	1.28	1296	1.50	1354	1.72	1410	1.97
1350	1190	1.13	1255	1.33	1316	1.55	1374	1.78	1429	2.03
1425	1211	1.19	1276	1.39	1337	1.61	1394	1.85	1449	2.09
1500	1232	1.25	1297	1.46	1357	1.68	1415	1.91	**1469**	**2.16**

NOTE: For more information, see General Fan Performance Notes.
Boldface indicates field−supplied drive is required.
Medium static 770−1175 RPM, 1.2 BHP max
High static 1035−1466 RPM, 2.4 BHP max

TABLE 33 – RGH036 3 PHASE WITH HOT GAS REHEAT 3 TON VERTICAL SUPPLY

CFM	Available External Static Pressure (in. wg)									
	0.2		0.4		0.6		0.8		1.0	
	RPM	BHP	RPM	BHP	RPM	BHP	RPM	BHP	RPM	BHP
900	592	0.14	721	0.25	826	0.38	916	0.53	997	0.69
975	616	0.17	744	0.28	847	0.41	936	0.56	1016	0.72
1050	641	0.19	766	0.30	868	0.44	957	0.59	1036	0.76
1125	667	0.22	790	0.33	890	0.47	978	0.63	1056	0.80
1200	693	0.25	813	0.37	913	0.51	999	0.67	1077	0.84
1275	720	0.29	837	0.41	935	0.55	1021	0.71	1098	0.88
1350	747	0.33	862	0.45	958	0.60	1043	0.76	1119	0.94
1425	775	0.37	887	0.50	982	0.65	1066	0.81	1141	0.99
1500	802	0.42	912	0.55	1006	0.70	1088	0.87	1163	1.05

CFM	Available External Static Pressure (in. wg)									
	1.2		1.4		1.6		1.8		2.0	
	RPM	BHP	RPM	BHP	RPM	BHP	RPM	BHP	RPM	BHP
900	1070	0.88	1137	1.07	1201	1.29	1260	1.51	1317	1.75
975	1089	0.91	1156	1.11	1219	1.32	1279	1.54	1335	1.78
1050	1108	0.94	1175	1.14	1238	1.36	1297	1.58	1353	1.82
1125	1128	0.98	1195	1.18	1257	1.40	1316	1.62	1372	1.86
1200	1148	1.03	1214	1.23	1276	1.44	1335	1.67	1391	1.91
1275	1169	1.07	1235	1.28	1296	1.50	1354	1.72	1410	1.97
1350	1190	1.13	1255	1.33	1316	1.55	1374	1.78	1429	2.03
1425	1211	1.19	1276	1.39	1337	1.61	1394	1.85	1449	2.09
1500	1232	1.25	1297	1.46	1357	1.68	1415	1.91	**1469**	**2.16**

NOTE: For more information, see General Fan Performance Notes.
Boldface indicates field−supplied drive is required.

Standard static 560−854 RPM, 1.2 BHP max
Medium static 770−1175 RPM, 1.2 BHP max
High static 1035−1466 RPM, 2.4 BHP max

FAN PERFORMANCE (cont.)

Table 34 – RGH048, 3 PHASE, 4 TON HORIZONTAL SUPPLY – NO HOT GAS REHEAT

CFM	Available External Static Pressure (in. wg)									
	0.2		0.4		0.6		0.8		1.0	
	RPM	BHP	RPM	BHP	RPM	BHP	RPM	BHP	RPM	BHP
1200	**681**	**0.24**	**800**	**0.35**	**902**	**0.48**	992	0.63	1074	0.78
1300	**717**	**0.29**	**831**	**0.41**	930	0.54	1019	0.69	1099	0.85
1400	**753**	**0.34**	**863**	**0.46**	959	0.60	1046	0.75	1125	0.92
1500	**790**	**0.40**	**896**	**0.53**	990	0.67	1074	0.83	1151	1.00
1600	**828**	**0.46**	930	0.60	1021	0.75	1103	0.91	1179	1.09
1700	**866**	**0.54**	964	0.68	1053	0.84	1133	1.01	1207	1.18
1800	**905**	**0.62**	1000	0.77	1085	0.94	1164	1.11	1236	1.29
1900	944	0.71	1036	0.87	1119	1.04	1195	1.22	1266	1.41
2000	984	0.82	1072	0.98	1153	1.15	1227	1.34	1297	1.53

CFM	Available External Static Pressure (in. wg)									
	1.2		1.4		1.6		1.8		2.0	
	RPM	BHP	RPM	BHP	RPM	BHP	RPM	BHP	RPM	BHP
1200	1150	0.95	1221	1.13	1287	1.31	1350	1.51	1410	1.72
1300	1173	1.02	1243	1.20	1309	1.39	1371	1.59	1430	1.80
1400	1198	1.09	1266	1.28	1331	1.47	1393	1.68	1451	1.89
1500	1223	1.18	1291	1.36	1355	1.56	1415	1.77	1473	1.99
1600	1249	1.27	1316	1.46	1379	1.66	1439	1.87	1496	2.09
1700	1277	1.37	1342	1.57	1404	1.77	1463	1.99	1520	2.21
1800	1305	1.48	1369	1.68	1430	1.89	1489	2.11	1545	2.34
1900	1333	1.60	1397	1.81	1457	2.02	1514	2.25	1570	2.48
2000	1363	1.73	1425	1.94	1484	2.16	1541	2.39	1596	2.63

NOTE: For more information, see General Fan Performance Notes.
Boldface indicates field−supplied drive is required.
Medium static 920−1303 RPM, 1.7 BHP max
High static 1208−1639 RPM, 2.9 BHP max

TABLE 35 – RGH048 3 PHASE WITH HOT GAS REHEAT 4 TON HORIZONTAL SUPPLY

CFM	Available External Static Pressure (in. wg)									
	0.2		0.4		0.6		0.8		1.0	
	RPM	BHP	RPM	BHP	RPM	BHP	RPM	BHP	RPM	BHP
1200	681	0.24	800	0.35	902	0.48	992	0.63	1074	0.78
1300	717	0.29	831	0.41	930	0.54	1019	0.69	1099	0.85
1400	753	0.34	863	0.46	959	0.60	1046	0.75	1125	0.92
1500	790	0.40	896	0.53	990	0.67	1074	0.83	1151	1.00
1600	828	0.46	930	0.60	1021	0.75	1103	0.91	1179	1.09
1700	866	0.54	964	0.68	1053	0.84	1133	1.01	1207	1.18
1800	905	0.62	1000	0.77	1085	0.94	1164	1.11	1236	1.29
1900	944	0.71	1036	0.87	1119	1.04	1195	1.22	1266	1.41
2000	984	0.82	1072	0.98	1153	1.15	1227	1.34	1297	1.53

CFM	Available External Static Pressure (in. wg)									
	1.2		1.4		1.6		1.8		2.0	
	RPM	BHP	RPM	BHP	RPM	BHP	RPM	BHP	RPM	BHP
1200	1150	0.95	1221	1.13	1287	1.31	1350	1.51	1410	1.72
1300	1173	1.02	1243	1.20	1309	1.39	1371	1.59	1430	1.80
1400	1198	1.09	1266	1.28	1331	1.47	1393	1.68	1451	1.89
1500	1223	1.18	1291	1.36	1355	1.56	1415	1.77	1473	1.99
1600	1249	1.27	1316	1.46	1379	1.66	1439	1.87	1496	2.09
1700	1277	1.37	1342	1.57	1404	1.77	1463	1.99	1520	2.21
1800	1305	1.48	1369	1.68	1430	1.89	1489	2.11	1545	2.34
1900	1333	1.60	1397	1.81	1457	2.02	1514	2.25	1570	2.48
2000	1363	1.73	1425	1.94	1484	2.16	1541	2.39	1596	2.63

NOTE: For more information, see General Fan Performance Notes.
Standard static 560−854 RPM, 1.2 BHP max
Medium static 770−1175 RPM, 1.7 BHP max
High static 1208−1639 RPM, 2.9 BHP max

FAN PERFORMANCE (cont.)

Table 36 – RGH048, 3 PHASE, 4 TON VERTICAL SUPPLY – NO HOT GAS REHEAT

CFM	Available External Static Pressure (in. wg)									
	0.2		0.4		0.6		0.8		1.0	
	RPM	BHP	RPM	BHP	RPM	BHP	RPM	BHP	RPM	BHP
1200	**693**	**0.25**	**813**	**0.37**	**913**	**0.51**	999	0.67	1077	0.84
1300	**729**	**0.30**	**846**	**0.42**	943	0.57	1028	0.73	1105	0.90
1400	**765**	**0.35**	**879**	**0.48**	974	0.63	1058	0.79	1134	0.97
1500	**802**	**0.42**	**912**	**0.55**	1006	0.70	1088	0.87	1163	1.05
1600	**840**	**0.49**	947	0.63	1038	0.78	1119	0.95	1193	1.14
1700	**878**	**0.57**	982	0.71	1071	0.87	1151	1.05	1224	1.24
1800	**917**	**0.65**	1017	0.81	1105	0.97	1183	1.15	1255	1.35
1900	956	0.75	1053	0.91	1139	1.08	1216	1.27	1287	1.47
2000	995	0.86	1090	1.02	1173	1.20	1249	1.39	1319	1.59

CFM	Available External Static Pressure (in. wg)									
	1.2		1.4		1.6		1.8		2.0	
	RPM	BHP	RPM	BHP	RPM	BHP	RPM	BHP	RPM	BHP
1200	1148	1.03	1214	1.23	1276	1.44	1335	1.67	1391	1.91
1300	1176	1.09	1241	1.30	1303	1.51	1361	1.74	1416	1.98
1400	1204	1.17	1269	1.37	1330	1.59	1388	1.82	1442	2.07
1500	1232	1.25	1297	1.46	1357	1.68	1415	1.91	1469	2.16
1600	1262	1.34	1325	1.55	1385	1.78	1442	2.01	1496	2.26
1700	1291	1.44	1354	1.66	1414	1.89	1470	2.12	1524	2.37
1800	1322	1.55	1384	1.77	1443	2.00	1499	2.25	1552	2.50
1900	1352	1.68	1414	1.90	1472	2.13	1528	2.38	1580	2.63
2000	1384	1.81	1445	2.04	1502	2.27	1557	2.52	1609	2.78

NOTE: For more information, see General Fan Performance Notes.
Boldface indicates field−supplied drive is required.
Medium static 920−1303 RPM, 1.7 BHP max
High static 1208−1639 RPM, 2.9 BHP max

TABLE 37 – RGH048 3 PHASE WITH HOT GAS REHEAT 4 TON VERTICAL SUPPLY

CFM	Available External Static Pressure (in. wg)									
	0.2		0.4		0.6		0.8		1.0	
	RPM	BHP	RPM	BHP	RPM	BHP	RPM	BHP	RPM	BHP
1200	693	0.25	813	0.37	913	0.51	999	0.67	1077	0.84
1300	729	0.30	846	0.42	943	0.57	1028	0.73	1105	0.90
1400	765	0.35	879	0.48	974	0.63	1058	0.79	1134	0.97
1500	802	0.42	912	0.55	1006	0.70	1088	0.87	1163	1.05
1600	840	0.49	947	0.63	1038	0.78	1119	0.95	1193	1.14
1700	878	0.57	982	0.71	1071	0.87	1151	1.05	1224	1.24
1800	917	0.65	1017	0.81	1105	0.97	1183	1.15	1255	1.35
1900	956	0.75	1053	0.91	1139	1.08	1216	1.27	1287	1.47
2000	995	0.86	1090	1.02	1173	1.20	1249	1.39	1319	1.59

CFM	Available External Static Pressure (in. wg)									
	1.2		1.4		1.6		1.8		2.0	
	RPM	BHP	RPM	BHP	RPM	BHP	RPM	BHP	RPM	BHP
1200	1148	1.03	1214	1.23	1276	1.44	1335	1.67	1391	1.91
1300	1176	1.09	1241	1.30	1303	1.51	1361	1.74	1416	1.98
1400	1204	1.17	1269	1.37	1330	1.59	1388	1.82	1442	2.07
1500	1232	1.25	1297	1.46	1357	1.68	1415	1.91	1469	2.16
1600	1262	1.34	1325	1.55	1385	1.78	1442	2.01	1496	2.26
1700	1291	1.44	1354	1.66	1414	1.89	1470	2.12	1524	2.37
1800	1322	1.55	1384	1.77	1443	2.00	1499	2.25	1552	2.50
1900	1352	1.68	1414	1.90	1472	2.13	1528	2.38	1580	2.63
2000	1384	1.81	1445	2.04	1502	2.27	1557	2.52	1609	2.78

NOTE: For more information, see General Fan Performance Notes.

Standard static 560−854 RPM, 1.2 BHP max
Medium static 770−1175 RPM, 1.7 BHP max
High static 1208−1639 RPM, 2.9 BHP max

FAN PERFORMANCE (cont.)

Table 38 – RGH060, 3 PHASE, 5 TON HORIZONTAL SUPPLY – NO HOT GAS REHEAT

CFM	Available External Static Pressure (in. wg)									
	0.2		0.4		0.6		0.8		1.0	
	RPM	BHP	RPM	BHP	RPM	BHP	RPM	BHP	RPM	BHP
1500	**798**	**0.41**	906	0.55	1002	0.71	1088	0.87	1167	1.05
1625	**845**	**0.50**	949	0.65	1041	0.81	1125	0.98	1202	1.17
1750	**893**	**0.60**	993	0.76	1081	0.93	1163	1.11	1238	1.30
1875	**942**	**0.71**	1037	0.88	1123	1.06	1202	1.25	1275	1.44
2000	**992**	**0.84**	1083	1.02	1166	1.21	1242	1.40	1313	1.61
2125	1043	0.98	1129	1.17	1209	1.37	1283	1.57	1353	1.79
2250	1093	1.14	1177	1.34	1254	1.55	1325	1.76	1393	1.98
2375	1145	1.32	1225	1.53	1299	1.74	1369	1.97	1434	2.20
2500	1196	1.51	1273	1.73	1345	1.96	1413	2.19	1477	2.43

CFM	Available External Static Pressure (in. wg)									
	1.2		1.4		1.6		1.8		2.0	
	RPM	BHP	RPM	BHP	RPM	BHP	RPM	BHP	RPM	BHP
1500	1241	1.23	1310	1.42	1375	1.63	1438	1.84	1497	2.06
1625	1274	1.36	1342	1.56	1406	1.77	1467	1.98	1526	2.21
1750	1308	1.50	1375	1.70	1438	1.92	1498	2.14	1555	2.37
1875	1344	1.65	1409	1.86	1471	2.09	1530	2.32	1586	2.55
2000	1380	1.82	1444	2.04	1505	2.27	1563	2.51	1619	2.75
2125	1418	2.01	1481	2.24	1540	2.47	1597	2.72	**1652**	**2.97**
2250	1457	2.21	1518	2.45	1576	2.69	**1632**	**2.94**	**1686**	**3.20**
2375	1497	2.43	1556	2.68	**1614**	**2.93**	**1669**	**3.19**	–	–
2500	1538	2.68	**1596**	**2.93**	**1652**	**3.19**	–	–	–	–

NOTE: For more information, see General Fan Performance Notes.
Boldface indicates field–supplied drive is required.
Medium static 1035–1466 RPM, 2.4 BHP
High static 1303 – 1687 RPM, 2.9 BHP max

TABLE 39 – RGH060 3 PHASE WITH HOT GAS REHEAT 5 TON HORIZONTAL SUPPLY

CFM	Available External Static Pressure (in. wg)									
	0.2		0.4		0.6		0.8		1.0	
	RPM	BHP	RPM	BHP	RPM	BHP	RPM	BHP	RPM	BHP
1500	798	0.41	906	0.55	1002	0.71	1088	0.87	1167	1.05
1625	845	0.50	949	0.65	1041	0.81	1125	0.98	1202	1.17
1750	893	0.60	993	0.76	1081	0.93	1163	1.11	1238	1.30
1875	942	0.71	1037	0.88	1123	1.06	1202	1.25	1275	1.44
2000	992	0.84	1083	1.02	1166	1.21	1242	1.40	1313	1.61
2125	1043	0.98	1129	1.17	1209	1.37	1283	1.57	1353	1.79
2250	1093	1.14	1177	1.34	1254	1.55	1325	1.76	1393	1.98
2375	1145	1.32	1225	1.53	1299	1.74	1369	1.97	1434	2.20
2500	1196	1.51	1273	1.73	1345	1.96	1413	2.19	1477	2.43

CFM	Available External Static Pressure (in. wg)									
	1.2		1.4		1.6		1.8		2.0	
	RPM	BHP	RPM	BHP	RPM	BHP	RPM	BHP	RPM	BHP
1500	1241	1.23	1310	1.42	1375	1.63	1438	1.84	1497	2.06
1625	1274	1.36	1342	1.56	1406	1.77	1467	1.98	1526	2.21
1750	1308	1.50	1375	1.70	1438	1.92	1498	2.14	1555	2.37
1875	1344	1.65	1409	1.86	1471	2.09	1530	2.32	1586	2.55
2000	1380	1.82	1444	2.04	1505	2.27	1563	2.51	1619	2.75
2125	1418	2.01	1481	2.24	1540	2.47	1597	2.72	1652	2.97
2250	1457	2.21	1518	2.45	1576	2.69	1632	2.94	**1686**	**3.20**
2375	1497	2.43	1556	2.68	1614	2.93	**1669**	**3.19**	–	–
2500	1538	2.68	1596	2.93	**1652**	**3.19**	–	–	–	–

NOTE: For more information, see General Fan Performance Notes.
Boldface indicates field–supplied drive is required.
Standard static 770–1175 RPM, 1.2 BHP max
Medium static 1035–1466 RPM, 2.4 BHP max
High static 1303–1687 RPM, 2.9 BHP max

FAN PERFORMANCE (cont.)

Table 40 – RGH060, 3 PHASE, 5 TON VERTICAL SUPPLY – NO HOT GAS REHEAT

CFM	Available External Static Pressure (in. wg)									
	0.2		0.4		0.6		0.8		1.0	
	RPM	BHP	RPM	BHP	RPM	BHP	RPM	BHP	RPM	BHP
1500	**847**	0.41	966	0.55	1067	0.68	1158	0.81	1240	0.93
1625	**896**	0.50	1010	0.65	1109	0.79	1198	0.93	1278	1.07
1750	**947**	0.59	1056	0.76	1152	0.92	1238	1.07	1318	1.22
1875	**998**	0.70	1103	0.88	1196	1.05	1280	1.22	1358	1.38
2000	1049	0.82	1151	1.02	1241	1.20	1323	1.38	1399	1.56
2125	1102	0.96	1199	1.17	1287	1.37	1367	1.56	1441	1.75
2250	1154	1.11	1248	1.33	1333	1.55	1411	1.75	1484	1.96
2375	1208	1.28	1298	1.52	1381	1.74	1457	1.96	1528	2.18
2500	1261	1.47	1349	1.72	1429	1.96	1503	2.19	1572	2.42

CFM	Available External Static Pressure (in. wg)									
	1.2		1.4		1.6		1.8		2.0	
	RPM	BHP	RPM	BHP	RPM	BHP	RPM	BHP	RPM	BHP
1500	1316	1.05	1387	1.17	1454	1.28	1517	1.39	1578	1.50
1625	1353	1.20	1423	1.33	1489	1.46	1552	1.58	1611	1.70
1750	1391	1.36	1460	1.51	1525	1.65	1587	1.78	1646	1.91
1875	1430	1.54	1498	1.70	1562	1.85	1623	2.00	1681	2.14
2000	1470	1.73	1537	1.90	1600	2.06	1660	2.23	**1718**	**2.38**
2125	1511	1.93	1576	2.12	1639	2.29	**1698**	**2.47**	**1755**	**2.64**
2250	1552	2.15	1617	2.35	1678	2.54	**1737**	**2.73**	1793	2.92
2375	1595	2.39	1658	2.60	**1718**	**2.80**	1776	3.01	–	–
2500	1638	2.64	**1700**	**2.87**	1760	3.08	–	–	–	–

NOTE: For more information, see General Fan Performance Notes.
Boldface indicates field−supplied drive is required.
Medium static 1035−1466 RPM, 2.4 BHP
High static 1303 − 1687 RPM, 2.9 BHP max

TABLE 41 – RGH060 3 PHASE WITH HOT GAS REHEAT 5 TON VERTICAL SUPPLY

CFM	Available External Static Pressure (in. wg)									
	0.2		0.4		0.6		0.8		1.0	
	RPM	BHP	RPM	BHP	RPM	BHP	RPM	BHP	RPM	BHP
1500	847	0.41	966	0.55	1067	0.68	1158	0.81	1240	0.93
1625	896	0.50	1010	0.65	1109	0.79	1198	0.93	1278	1.07
1750	947	0.59	1056	0.76	1152	0.92	1238	1.07	1318	1.22
1875	998	0.70	1103	0.88	1196	1.05	1280	1.22	1358	1.38
2000	1049	0.82	1151	1.02	1241	1.20	1323	1.38	1399	1.56
2125	1102	0.96	1199	1.17	1287	1.37	1367	1.56	1441	1.75
2250	1154	1.11	1248	1.33	1333	1.55	1411	1.75	1484	1.96
2375	1208	1.28	1298	1.52	1381	1.74	1457	1.96	1528	2.18
2500	1261	1.47	1349	1.72	1429	1.96	1503	2.19	1572	2.42

CFM	Available External Static Pressure (in. wg)									
	1.2		1.4		1.6		1.8		2.0	
	RPM	BHP	RPM	BHP	RPM	BHP	RPM	BHP	RPM	BHP
1500	1316	1.05	1387	1.17	1454	1.28	1517	1.39	1578	1.50
1625	1353	1.20	1423	1.33	1489	1.46	1552	1.58	1611	1.70
1750	1391	1.36	1460	1.51	1525	1.65	1587	1.78	1646	1.91
1875	1430	1.54	1498	1.70	1562	1.85	1623	2.00	1681	2.14
2000	1470	1.73	1537	1.90	1600	2.06	1660	2.23	**1718**	**2.38**
2125	1511	1.93	1576	2.12	1639	2.29	**1698**	**2.47**	**1755**	**2.64**
2250	1552	2.15	1617	2.35	1678	2.54	**1737**	**2.73**	**1793**	**2.92**
2375	1595	2.39	1658	2.60	**1718**	**2.80**	**1776**	**3.01**	**–**	**–**
2500	1638	2.64	**1700**	**2.87**	**1760**	**3.08**	**–**	**–**	**–**	**–**

NOTE: For more information, see General Fan Performance Notes.
Boldface indicates field−supplied drive is required.
Standard static 770−1175 RPM, 1.2 BHP max
Medium static 1035−1466 RPM, 2.4 BHP max
High static 1303−1687 RPM, 2.9 BHP max

FAN PERFORMANCE (cont.)

Table 42 – RGH072, 3 PHASE, 6 TON HORIZONTAL SUPPLY

CFM	Available External Static Pressure (in. wg)									
	0.2		0.4		0.6		0.8		1.0	
	RPM	BHP	RPM	BHP	RPM	BHP	RPM	BHP	RPM	BHP
1800	**441**	**0.33**	533	0.51	611	0.72	681	0.96	745	1.23
1950	**462**	**0.38**	550	0.58	626	0.80	694	1.04	757	1.31
2100	**483**	**0.45**	567	0.65	641	0.88	708	1.13	769	1.40
2250	505	0.52	586	0.73	657	0.97	722	1.22	782	1.50
2400	528	0.60	605	0.82	674	1.07	738	1.33	796	1.62
2550	550	0.69	625	0.92	692	1.17	754	1.45	811	1.74
2700	574	0.80	645	1.03	710	1.29	770	1.57	826	1.88
2850	597	0.91	666	1.16	729	1.43	788	1.71	843	2.02
3000	621	1.03	688	1.29	749	1.57	806	1.87	859	2.18

CFM	Available External Static Pressure (in. wg)									
	1.2		1.4		1.6		1.8		2.0	
	RPM	BHP	RPM	BHP	RPM	BHP	RPM	BHP	RPM	BHP
1800	804	1.51	860	1.82	912	2.15	961	2.49	1008	2.85
1950	815	1.60	869	1.91	920	2.24	969	2.59	1016	2.96
2100	826	1.70	880	2.01	930	2.35	978	2.70	1024	3.07
2250	838	1.81	891	2.12	941	2.46	988	2.82	1033	3.19
2400	851	1.92	903	2.25	952	2.59	999	2.95	1043	3.33
2550	865	2.05	916	2.38	964	2.73	1010	3.10	1054	3.48
2700	879	2.19	929	2.53	976	2.88	1022	3.25	1066	3.64
2850	894	2.35	943	2.69	990	3.05	1035	3.43	1078	3.82
3000	910	2.51	958	2.86	1004	3.23	1048	3.61	1090	4.01

NOTE: For more information, see General Fan Performance Notes.
Boldface indicates field−supplied drive is required.

Standard static 489 − 747 RPM, 1.7 BHP max
Medium static 733 − 949 RPM, 2.9 BHP max
High static 909 − 1102 RPM, 4.7 BHP max

Table 43 – RGH072, 3 PHASE, 6 TON VERTICAL SUPPLY

CFM	Available External Static Pressure (in. wg)									
	0.2		0.4		0.6		0.8		1.0	
	RPM	BHP	RPM	BHP	RPM	BHP	RPM	BHP	RPM	BHP
1800	**449**	**0.34**	539	0.53	615	0.75	681	0.99	742	1.26
1950	**470**	**0.40**	557	0.60	631	0.83	696	1.08	756	1.35
2100	491	0.47	576	0.68	648	0.91	712	1.17	771	1.45
2250	513	0.54	595	0.76	665	1.01	728	1.27	786	1.56
2400	536	0.63	615	0.86	684	1.11	745	1.39	802	1.68
2550	558	0.72	635	0.97	702	1.23	763	1.51	818	1.81
2700	582	0.83	656	1.08	721	1.35	781	1.65	835	1.95
2850	605	0.94	677	1.21	741	1.49	799	1.79	853	2.11
3000	629	1.07	699	1.35	761	1.64	818	1.95	871	2.28

CFM	Available External Static Pressure (in. wg)									
	1.2		1.4		1.6		1.8		2.0	
	RPM	BHP	RPM	BHP	RPM	BHP	RPM	BHP	RPM	BHP
1800	797	1.54	848	1.84	896	2.16	942	2.49	985	2.84
1950	810	1.64	861	1.94	909	2.26	954	2.60	997	2.96
2100	824	1.74	875	2.06	922	2.38	967	2.73	1009	3.09
2250	839	1.86	889	2.18	935	2.52	980	2.87	1022	3.23
2400	854	1.99	903	2.32	950	2.66	993	3.02	1035	3.39
2550	870	2.13	918	2.46	964	2.81	1008	3.18	1049	3.55
2700	886	2.28	934	2.62	979	2.98	1022	3.35	1063	3.74
2850	903	2.44	950	2.79	995	3.16	1037	3.54	1078	3.93
3000	920	2.62	966	2.98	1010	3.35	1052	3.74	1093	4.14

NOTE: For more information, see General Fan Performance Notes.
Boldface indicates field−supplied drive is required.

Standard static 489 − 747 RPM, 1.7 BHP max
Medium static 733 − 949 RPM, 2.9 BHP max
High static 909 − 1102 RPM, 4.7 BHP max

FAN PERFORMANCE (cont.)

Table 44 – RGH090, 3 PHASE, 7.5 TON HORIZONTAL SUPPLY

CFM	Available External Static Pressure (in. wg)									
	0.2		0.4		0.6		0.8		1.0	
	RPM	BHP	RPM	BHP	RPM	BHP	RPM	BHP	RPM	BHP
2250	482	0.36	577	0.51	659	0.66	732	0.82	799	0.98
2438	505	0.43	597	0.59	676	0.75	748	0.92	813	1.09
2625	529	0.51	617	0.68	694	0.85	764	1.03	827	1.22
2813	554	0.60	638	0.78	713	0.97	781	1.16	843	1.35
3000	579	0.70	660	0.89	732	1.09	799	1.29	860	1.50
3188	604	0.81	683	1.02	753	1.23	817	1.44	877	1.65
3375	630	0.94	706	1.15	774	1.37	836	1.60	895	1.82
3563	657	1.08	729	1.31	795	1.54	856	1.77	913	2.01
3750	683	1.23	753	1.47	817	1.71	877	1.96	933	2.21

CFM	Available External Static Pressure (in. wg)									
	1.2		1.4		1.6		1.8		2.0	
	RPM	BHP	RPM	BHP	RPM	BHP	RPM	BHP	RPM	BHP
2250	860	1.14	917	1.31	971	1.48	1022	1.66	1071	1.84
2438	873	1.27	929	1.45	983	1.63	1033	1.81	1081	2.00
2625	887	1.40	942	1.59	995	1.78	1045	1.98	1092	2.18
2813	901	1.55	956	1.75	1008	1.95	1057	2.15	1104	2.36
3000	917	1.70	970	1.91	1021	2.13	1070	2.34	1117	2.56
3188	933	1.87	986	2.09	1036	2.32	1084	2.54	1130	2.77
3375	950	2.05	1002	2.29	1051	2.52	1098	2.76	1144	3.00
3563	967	2.25	1018	2.49	1067	2.74	1113	2.99	1158	3.24
3750	985	2.46	1035	2.71	1083	2.97	1129	3.23	1173	3.49

NOTE: For more information, see General Fan Performance Notes.
Boldface indicates field−supplied drive is required.

Standard static 518 – 733 RPM, 1.7 BHP max
Medium static 690 – 936 RPM, 2.4 BHP max
High static 838 – 1084 RPM, 3.7 BHP max

Table 45 – RGH090, 3 PHASE, 7.5 TON VERTICAL SUPPLY

CFM	Available External Static Pressure (in. wg)									
	0.2		0.4		0.6		0.8		1.0	
	RPM	BHP	RPM	BHP	RPM	BHP	RPM	BHP	RPM	BHP
2250	505	0.39	595	0.54	676	0.69	750	0.86	819	1.03
2438	532	0.47	617	0.63	694	0.79	766	0.97	833	1.15
2625	559	0.56	640	0.73	714	0.90	783	1.08	848	1.28
2813	588	0.67	664	0.84	735	1.03	801	1.22	864	1.42
3000	616	0.79	689	0.97	757	1.16	821	1.36	882	1.57
3188	646	0.92	715	1.11	780	1.31	842	1.52	901	1.74
3375	675	1.06	742	1.27	804	1.48	864	1.70	920	1.93
3563	705	1.23	769	1.44	829	1.66	886	1.89	941	2.13
3750	736	1.41	797	1.63	855	1.86	910	2.10	963	2.35

CFM	Available External Static Pressure (in. wg)									
	1.2		1.4		1.6		1.8		2.0	
	RPM	BHP	RPM	BHP	RPM	BHP	RPM	BHP	RPM	BHP
2250	884	1.21	945	1.40	1003	1.60	1059	1.80	1112	2.01
2438	896	1.34	955	1.54	1012	1.74	1066	1.95	1118	2.17
2625	909	1.47	967	1.68	1022	1.89	1075	2.11	1126	2.34
2813	923	1.62	980	1.84	1034	2.06	1086	2.29	1136	2.52
3000	939	1.79	994	2.01	1047	2.24	1098	2.47	1147	2.71
3188	956	1.97	1010	2.20	1061	2.43	1111	2.68	1159	2.93
3375	975	2.16	1027	2.40	1077	2.65	1125	2.90	1172	3.15
3563	994	2.37	1044	2.62	1093	2.87	1141	3.13	1186	3.40
3750	1014	2.60	1063	2.86	1111	3.12	1157	3.39	1202	3.66

NOTE: For more information, see General Fan Performance Notes.
Boldface indicates field−supplied drive is required.

Standard static 518 – 733 RPM, 1.7 BHP max
Medium static 690 – 936 RPM, 2.4 BHP max
High static 838 – 1084 RPM, 3.7 BHP max

FAN PERFORMANCE (cont.)

Table 46 – RGH102, 3 PHASE, 8.5 TON HORIZONTAL SUPPLY

CFM	Available External Static Pressure (in. wg)									
	0.2		0.4		0.6		0.8		1.0	
	RPM	BHP	RPM	BHP	RPM	BHP	RPM	BHP	RPM	BHP
2250	520	0.47	609	0.64	687	0.81	757	0.99	821	1.16
2438	547	0.57	633	0.75	708	0.94	776	1.12	839	1.31
2625	575	0.68	657	0.88	730	1.07	796	1.27	857	1.48
2813	604	0.81	683	1.02	753	1.23	817	1.44	877	1.65
3000	634	0.95	709	1.17	777	1.40	839	1.62	897	1.85
3188	664	1.11	736	1.35	801	1.58	862	1.82	919	2.06
3375	694	1.29	763	1.54	826	1.79	885	2.04	941	2.29
3563	725	1.49	791	1.75	852	2.01	909	2.28	963	2.54
3750	756	1.71	819	1.98	879	2.26	934	2.53	987	2.81

CFM	Available External Static Pressure (in. wg)									
	1.2		1.4		1.6		1.8		2.0	
	RPM	BHP	RPM	BHP	RPM	BHP	RPM	BHP	RPM	BHP
2250	881	1.35	937	1.53	990	1.72	1040	1.91	1088	2.11
2438	897	1.51	952	1.70	1004	1.90	1054	2.11	1101	2.31
2625	915	1.68	968	1.89	1020	2.10	1068	2.32	1115	2.53
2813	933	1.87	986	2.09	1036	2.32	1084	2.54	1130	2.77
3000	952	2.08	1004	2.31	1053	2.55	1100	2.79	1145	3.03
3188	972	2.30	1023	2.55	1071	2.80	1118	3.05	1162	3.30
3375	993	2.55	1043	2.81	1090	3.07	1136	3.33	1179	3.59
3563	1014	2.81	1063	3.08	1110	3.36	1154	3.63	1198	3.91
3750	1037	3.09	1084	3.38	1130	3.66	1174	3.95	1216	4.24

NOTE: For more information, see General Fan Performance Notes.
Boldface indicates field−supplied drive is required.

Standard static 518 – 733 RPM, 1.7 BHP max
Medium static 690 – 936 RPM, 2.4 BHP max
High static 838 – 1084 RPM, 3.7 BHP max

Table 47 – RGH102, 3 PHASE, 8.5 TON VERTICAL SUPPLY

CFM	Available External Static Pressure (in. wg)									
	0.2		0.4		0.6		0.8		1.0	
	RPM	BHP	RPM	BHP	RPM	BHP	RPM	BHP	RPM	BHP
2250	505	0.39	595	0.54	676	0.69	750	0.86	819	1.03
2438	532	0.47	617	0.63	694	0.79	766	0.97	833	1.15
2625	559	0.56	640	0.73	714	0.90	783	1.08	848	1.28
2813	588	0.67	664	0.84	735	1.03	801	1.22	864	1.42
3000	616	0.79	689	0.97	757	1.16	821	1.36	882	1.57
3188	646	0.92	715	1.11	780	1.31	842	1.52	901	1.74
3375	675	1.06	742	1.27	804	1.48	864	1.70	920	1.93
3563	705	1.23	769	1.44	829	1.66	886	1.89	941	2.13
3750	736	1.41	797	1.63	855	1.86	910	2.10	963	2.35

CFM	Available External Static Pressure (in. wg)									
	1.2		1.4		1.6		1.8		2.0	
	RPM	BHP	RPM	BHP	RPM	BHP	RPM	BHP	RPM	BHP
2250	884	1.21	945	1.40	1003	1.60	1059	1.80	1112	2.01
2438	896	1.34	955	1.54	1012	1.74	1066	1.95	1118	2.17
2625	909	1.47	967	1.68	1022	1.89	1075	2.11	1126	2.34
2813	923	1.62	980	1.84	1034	2.06	1086	2.29	1136	2.52
3000	939	1.79	994	2.01	1047	2.24	1098	2.47	1147	2.71
3188	956	1.97	1010	2.20	1061	2.43	1111	2.68	1159	2.93
3375	975	2.16	1027	2.40	1077	2.65	1125	2.90	1172	3.15
3563	994	2.37	1044	2.62	1093	2.87	1141	3.13	1186	3.40
3750	1014	2.60	1063	2.86	1111	3.12	1157	3.39	1202	3.66

NOTE: For more information, see General Fan Performance Notes.
Boldface indicates field−supplied drive is required.

Standard static 518 – 733 RPM, 1.7 BHP max
Medium static 690 – 936 RPM, 2.4 BHP max
High static 838 – 1084 RPM, 3.7 BHP max

FAN PERFORMANCE (cont.)

TABLE 48 – RGH110, 3 PHASE, 10 TON VERTICAL SUPPLY

CFM	Available External Static Pressure (in. wg)									
	0.2		0.4		0.6		0.8		1.0	
	RPM	BHP	RPM	BHP	RPM	BHP	RPM	BHP	RPM	BHP
3000	616	0.79	689	0.97	757	1.16	821	1.36	882	1.57
3250	655	0.96	724	1.16	788	1.37	849	1.58	907	1.80
3500	695	1.17	760	1.38	821	1.60	879	1.83	934	2.06
3750	736	1.41	797	1.63	855	1.86	910	2.10	963	2.35
4000	777	1.68	834	1.91	889	2.16	942	2.41	993	2.67
4250	818	1.98	873	2.23	925	2.49	976	2.75	1025	3.02
4500	860	2.32	912	2.58	962	2.85	1010	3.13	1057	3.41
4750	902	2.69	951	2.97	999	3.26	1046	3.55	1091	3.84
5000	944	3.11	991	3.40	1037	3.70	1082	4.00	1125	4.31

CFM	Available External Static Pressure (in. wg)									
	1.2		1.4		1.6		1.8		2.0	
	RPM	BHP	RPM	BHP	RPM	BHP	RPM	BHP	RPM	BHP
3000	939	1.79	994	2.01	1047	2.24	1098	2.47	1147	2.71
3250	962	2.03	1015	2.26	1066	2.50	1115	2.75	1163	3.00
3500	987	2.30	1038	2.54	1088	2.80	1135	3.05	1181	3.32
3750	1014	2.60	1063	2.86	1111	3.12	1157	3.39	1202	3.66
4000	1042	2.93	1090	3.20	1136	3.48	1180	3.76	1224	4.04
4250	1072	3.30	1118	3.58	1162	3.87	1205	4.16	1247	4.46
4500	1103	3.70	1147	4.00	1190	4.29	1232	4.60	–	–
4750	1135	4.14	1177	4.45	–	–	–	–	–	–
5000	1167	4.63	–	–	–	–	–	–	–	–

NOTE: For more information, see General Fan Performance Notes.

Standard static 591 – 838 RPM, 2.4 BHP max
Medium static 838 – 1084 RPM, 3.7 BHP max
High static 1022 – 1240 RPM, 4.9 BHP max

TABLE 49 – RGH110, 3 PHASE, 10 TON HORIZONTAL SUPPLY

CFM	Available External Static Pressure (in. wg)									
	0.2		0.4		0.6		0.8		1.0	
	RPM	BHP	RPM	BHP	RPM	BHP	RPM	BHP	RPM	BHP
3000	579	0.70	660	0.89	732	1.09	799	1.29	860	1.50
3250	613	0.85	690	1.06	760	1.27	823	1.49	883	1.71
3500	648	1.03	721	1.25	788	1.48	850	1.71	907	1.95
3750	683	1.23	753	1.47	817	1.71	877	1.96	933	2.21
4000	719	1.45	786	1.71	848	1.97	905	2.23	959	2.50
4250	756	1.71	819	1.98	879	2.26	934	2.53	987	2.81
4500	792	1.99	853	2.28	910	2.57	964	2.87	1015	3.16
4750	830	2.31	888	2.62	943	2.92	995	3.23	1044	3.54
5000	867	2.66	923	2.98	976	3.30	1026	3.63	1074	3.95

CFM	Available External Static Pressure (in. wg)									
	1.2		1.4		1.6		1.8		2.0	
	RPM	BHP	RPM	BHP	RPM	BHP	RPM	BHP	RPM	BHP
3000	917	1.70	970	1.91	1021	2.13	1070	2.34	1117	2.56
3250	938	1.93	991	2.16	1041	2.38	1089	2.61	1134	2.85
3500	961	2.18	1013	2.42	1062	2.66	1108	2.91	1153	3.15
3750	985	2.46	1035	2.71	1083	2.97	1129	3.23	1173	3.49
4000	1011	2.76	1059	3.03	1106	3.30	1151	3.58	1194	3.85
4250	1037	3.09	1084	3.38	1130	3.66	1174	3.95	1216	4.24
4500	1064	3.46	1110	3.76	1155	4.06	1198	4.36	1239	4.66
4750	1091	3.85	1137	4.16	1180	4.48	–	–	–	–
5000	1120	4.28	1164	4.61	–	–	–	–	–	–

NOTE: For more information, see General Fan Performance Notes.

Standard static 591 – 838 RPM, 2.4 BHP max
Medium static 838 – 1084 RPM, 3.7 BHP max
High static 1022 – 1240 RPM, 4.9 BHP max

FAN PERFORMANCE (cont.)

Table 50 – RGH120, 3 PHASE, 10 TON HORIZONTAL SUPPLY

CFM	Available External Static Pressure (in. wg)									
	0.2		0.4		0.6		0.8		1.0	
	RPM	BHP	RPM	BHP	RPM	BHP	RPM	BHP	RPM	BHP
3000	579	0.70	660	0.89	732	1.09	799	1.29	860	1.50
3250	613	0.85	690	1.06	760	1.27	823	1.49	883	1.71
3500	648	1.03	721	1.25	788	1.48	850	1.71	907	1.95
3750	683	1.23	753	1.47	817	1.71	877	1.96	933	2.21
4000	719	1.45	786	1.71	848	1.97	905	2.23	959	2.50
4250	756	1.71	819	1.98	879	2.26	934	2.53	987	2.81
4500	792	1.99	853	2.28	910	2.57	964	2.87	1015	3.16
4750	830	2.31	888	2.62	943	2.92	995	3.23	1044	3.54
5000	867	2.66	923	2.98	976	3.30	1026	3.63	1074	3.95

CFM	Available External Static Pressure (in. wg)									
	1.2		1.4		1.6		1.8		2.0	
	RPM	BHP	RPM	BHP	RPM	BHP	RPM	BHP	RPM	BHP
3000	917	1.70	970	1.91	1021	2.13	1070	2.34	1117	2.56
3250	938	1.93	991	2.16	1041	2.38	1089	2.61	1134	2.85
3500	961	2.18	1013	2.42	1062	2.66	1108	2.91	1153	3.15
3750	985	2.46	1035	2.71	1083	2.97	1129	3.23	1173	3.49
4000	1011	2.76	1059	3.03	1106	3.30	1151	3.58	1194	3.85
4250	1037	3.09	1084	3.38	1130	3.66	1174	3.95	1216	4.24
4500	1064	3.46	1110	3.76	1155	4.06	1198	4.36	1239	4.66
4750	1091	3.85	1137	4.16	1180	4.48	–	–	–	–
5000	1120	4.28	1164	4.61	–	–	–	–	–	–

NOTE: For more information, see General Fan Performance Notes.
Boldface indicates field−supplied drive is required.

Standard static 591 – 838 RPM, 2.4 BHP max
Medium static 838 – 1084 RPM, 3.7 BHP max
High static 1022 – 1240 RPM, 5.0 BHP max

Table 51 – RGH120, 3 PHASE, 10 TON VERTICAL SUPPLY

CFM	Available External Static Pressure (in. wg)									
	0.2		0.4		0.6		0.8		1.0	
	RPM	BHP	RPM	BHP	RPM	BHP	RPM	BHP	RPM	BHP
3000	616	0.79	689	0.97	757	1.16	821	1.36	882	1.57
3250	655	0.96	724	1.16	788	1.37	849	1.58	907	1.80
3500	695	1.17	760	1.38	821	1.60	879	1.83	934	2.06
3750	736	1.41	797	1.63	855	1.86	910	2.10	963	2.35
4000	777	1.68	834	1.91	889	2.16	942	2.41	993	2.67
4250	818	1.98	873	2.23	925	2.49	976	2.75	1025	3.02
4500	860	2.32	912	2.58	962	2.85	1010	3.13	1057	3.41
4750	902	2.69	951	2.97	999	3.26	1046	3.55	1091	3.84
5000	944	3.11	991	3.40	1037	3.70	1082	4.00	1125	4.31

CFM	Available External Static Pressure (in. wg)									
	1.2		1.4		1.6		1.8		2.0	
	RPM	BHP	RPM	BHP	RPM	BHP	RPM	BHP	RPM	BHP
3000	939	1.79	994	2.01	1047	2.24	1098	2.47	1147	2.71
3250	962	2.03	1015	2.26	1066	2.50	1115	2.75	1163	3.00
3500	987	2.30	1038	2.54	1088	2.80	1135	3.05	1181	3.32
3750	1014	2.60	1063	2.86	1111	3.12	1157	3.39	1202	3.66
4000	1042	2.93	1090	3.20	1136	3.48	1180	3.76	1224	4.04
4250	1072	3.30	1118	3.58	1162	3.87	1205	4.16	1247	4.46
4500	1103	3.70	1147	4.00	1190	4.29	1232	4.60	–	–
4750	1135	4.14	1177	4.45	–	–	–	–	–	–
5000	1167	4.63	–	–	–	–	–	–	–	–

NOTE: For more information, see General Fan Performance Notes.
Boldface indicates field−supplied drive is required.

Standard static 591 – 838 RPM, 2.4 BHP max
Medium static 838 – 1084 RPM, 3.7 BHP max
High static 1022 – 1240 RPM, 5.0 BHP max

FAN PERFORMANCE (cont.)

Table 52 – RGH150, 3 PHASE, 12.5 TON HORIZONTAL SUPPLY

CFM	Available External Static Pressure (in. wg)									
	0.2		0.4		0.6		0.8		1.0	
	RPM	BHP	RPM	BHP	RPM	BHP	RPM	BHP	RPM	BHP
3438	421	0.57	493	0.78	561	1.02	627	1.30	688	1.62
3750	445	0.69	512	0.91	576	1.17	638	1.45	697	1.77
4063	470	0.84	533	1.07	593	1.33	651	1.62	707	1.94
4375	496	1.00	555	1.25	612	1.52	666	1.82	720	2.14
4688	522	1.19	579	1.46	632	1.74	683	2.04	734	2.37
5000	549	1.41	602	1.68	653	1.98	702	2.29	750	2.62
5313	576	1.64	627	1.94	675	2.24	721	2.57	767	2.91
5625	603	1.91	652	2.22	698	2.54	742	2.87	786	3.23
5938	630	2.20	677	2.53	721	2.87	764	3.21	805	3.57
6250	657	2.53	702	2.87	745	3.22	786	3.58	826	3.96

CFM	Available External Static Pressure (in. wg)									
	1.2		1.4		1.6		1.8		2.0	
	RPM	BHP	RPM	BHP	RPM	BHP	RPM	BHP	RPM	BHP
3438	746	1.96	799	2.32	849	2.70	896	3.09	940	3.50
3750	753	2.12	806	2.48	856	2.88	903	3.28	947	3.70
4063	761	2.29	813	2.67	862	3.07	909	3.48	953	3.92
4375	771	2.50	821	2.88	869	3.28	916	3.70	960	4.15
4688	783	2.73	831	3.11	878	3.52	923	3.95	966	4.40
5000	797	2.99	843	3.37	888	3.78	931	4.22	974	4.67
5313	812	3.28	856	3.67	899	4.08	941	4.52	983	4.98
5625	828	3.60	870	3.99	912	4.41	953	4.85	993	5.31
5938	846	3.95	886	4.36	926	4.78	965	5.22	1004	5.69
6250	865	4.35	904	4.75	942	5.18	979	5.63	–––	–––

NOTE: For more information, see General Fan Performance Notes.

Standard static 440 – 609 RPM, 2.9 BHP max

Medium static 609 – 778 RPM, 3.7 BHP max

High static 776 – 955 RPM, 6.1 BHP max

Table 53 – RGH150, 3 PHASE, 12.5 TON VERTICAL SUPPLY

CFM	Available External Static Pressure (in. wg)									
	0.2		0.4		0.6		0.8		1.0	
	RPM	BHP	RPM	BHP	RPM	BHP	RPM	BHP	RPM	BHP
3438	431	0.59	504	0.81	574	1.08	643	1.40	706	1.74
3750	456	0.71	524	0.95	589	1.22	653	1.54	715	1.90
4063	481	0.86	546	1.11	606	1.39	666	1.71	725	2.07
4375	507	1.03	569	1.30	626	1.59	681	1.91	736	2.27
4688	533	1.22	593	1.51	647	1.81	698	2.13	750	2.49
5000	560	1.44	617	1.74	669	2.05	718	2.39	766	2.75
5313	587	1.68	642	2.00	691	2.33	738	2.67	784	3.04
5625	614	1.95	667	2.29	715	2.63	760	2.99	804	3.36
5938	642	2.25	692	2.60	739	2.97	782	3.34	824	3.72
6250	670	2.58	718	2.95	763	3.33	805	3.72	846	4.11

CFM	Available External Static Pressure (in. wg)									
	1.2		1.4		1.6		1.8		2.0	
	RPM	BHP	RPM	BHP	RPM	BHP	RPM	BHP	RPM	BHP
3438	763	2.10	815	2.46	862	2.82	905	3.18	946	3.55
3750	772	2.28	825	2.66	873	3.05	918	3.45	959	3.84
4063	781	2.46	834	2.87	883	3.29	929	3.71	971	4.14
4375	790	2.66	843	3.09	892	3.53	938	3.98	982	4.43
4688	801	2.89	852	3.32	901	3.78	947	4.25	991	4.73
5000	814	3.15	863	3.58	910	4.04	956	4.53	999	5.03
5313	830	3.44	875	3.87	920	4.33	965	4.83	1008	5.34
5625	847	3.77	890	4.20	933	4.66	975	5.15	1017	5.67
5938	865	4.13	906	4.56	947	5.03	987	5.52	1028	6.04
6250	885	4.53	924	4.97	962	5.43	1001	5.92	––––	––––

NOTE: For more information, see General Fan Performance Notes.

Standard static 440 – 609 RPM, 2.9 BHP max

Medium static 609 – 778 RPM, 3.7 BHP max

High static 776 – 955 RPM, 6.1 BHP max

FAN PERFORMANCE (cont.)
ECM MULTI SPEED/TORQUE MOTOR

Table 54 – RGH036 Horizontal Unit Direct Drive

Speed (Torque) tap	CFM	ESP	BHP
1	900	0.45	0.23
	975	0.33	0.22
	1050	0.22	0.20
	1125	0.12	0.19
	1200	0.05	0.17
	1275	–	–
	1350	–	–
	1425	–	–
	1500	–	–
2	900	0.66	0.30
	975	0.52	0.28
	1050	0.39	0.27
	1125	0.27	0.26
	1200	0.16	0.24
	1275	0.05	0.23
	1350	–	–
	1425	–	–
	1500	–	–
3	900	1.01	0.43
	975	0.88	0.41
	1050	0.73	0.39
	1125	0.59	0.38
	1200	0.46	0.36
	1275	0.33	0.36
	1350	0.21	0.33
	1425	0.09	0.31
	1500	–	–
4	900	1.13	0.46
	975	1.03	0.46
	1050	0.92	0.46
	1125	0.81	0.46
	1200	0.69	0.46
	1275	0.57	0.45
	1350	0.44	0.44
	1425	0.31	0.42
	1500	0.18	0.40
5	900	1.20	0.49
	975	1.14	0.51
	1050	0.92	0.53
	1125	0.81	0.55
	1200	0.95	0.57
	1275	0.90	0.60
	1350	0.84	0.62
	1425	0.78	0.65
	1500	0.72	0.68

Table 55 – RGH036 Vertical Unit Direct Drive

Speed (Torque) tap	CFM	ESP	BHP
1	900	0.30	0.19
	975	0.17	0.17
	1050	0.06	0.16
	1125	–	–
	1200	–	–
	1275	–	–
	1350	–	–
	1425	–	–
	1500	–	–
2	900	0.48	0.25
	975	0.34	0.23
	1050	0.20	0.22
	1125	0.07	0.20
	1200	–	–
	1275	–	–
	1350	–	–
	1425	–	–
	1500	–	–
3	900	0.84	0.38
	975	0.69	0.36
	1050	0.53	0.33
	1125	0.38	0.32
	1200	0.24	0.31
	1275	0.10	0.31
	1350	–	–
	1425	–	–
	1500	–	–
4	900	0.99	0.43
	975	0.88	0.43
	1050	0.75	0.43
	1125	0.61	0.43
	1200	0.47	0.42
	1275	0.33	0.40
	1350	0.19	0.38
	1425	–	–
	1500	–	–
5	900	1.10	0.47
	975	1.02	0.49
	1050	0.75	0.51
	1125	0.61	0.54
	1200	0.81	0.56
	1275	0.74	0.58
	1350	0.67	0.61
	1425	0.60	0.63
	1500	0.52	0.66

FAN PERFORMANCE (cont.)
ECM MULTI SPEED/TORQUE MOTOR

Table 56 – RGH048 Horizontal Unit Direct Drive

Speed (Torque) tap	CFM	ESP	BHP
1	1200	0.49	0.35
	1300	0.34	0.33
	1400	0.20	0.31
	1500	0.06	0.29
	1600	–	–
	1700	–	–
	1800	–	–
	1900	–	–
	2000	–	–
2	1200	0.60	0.40
	1300	0.45	0.38
	1400	0.30	0.36
	1500	0.16	0.34
	1600	0.01	0.32
	1700	–	–
	1800	–	–
	1900	–	–
	2000	–	–
3	1200	0.94	0.59
	1300	0.83	0.61
	1400	0.71	0.63
	1500	0.59	0.61
	1600	0.46	0.59
	1700	0.33	0.56
	1800	0.19	0.53
	1900	0.07	0.49
	2000	–	–
4	1200	0.98	0.59
	1300	0.89	0.62
	1400	0.81	0.65
	1500	0.72	0.66
	1600	0.62	0.67
	1700	0.52	0.68
	1800	0.40	0.68
	1900	0.27	0.66
	2000	0.12	0.61
5	1200	1.02	0.60
	1300	0.95	0.63
	1400	0.81	0.67
	1500	0.72	0.70
	1600	0.74	0.74
	1700	0.67	0.78
	1800	0.59	0.82
	1900	0.51	0.86
	2000	0.42	0.89

Table 57 – RGH048 Vertical Unit Direct Drive

Speed (Torque) tap	CFM	ESP	BHP
1	1200	0.38	0.30
	1300	0.24	0.28
	1400	0.12	0.27
	1500	0.01	0.26
	1600	–	–
	1700	–	–
	1800	–	–
	1900	–	–
	2000	–	–
2	1200	0.49	0.34
	1300	0.34	0.32
	1400	0.20	0.31
	1500	0.05	0.29
	1600	–	–
	1700	–	–
	1800	–	–
	1900	–	–
	2000	–	–
3	1200	0.87	0.56
	1300	0.74	0.57
	1400	0.60	0.59
	1500	0.44	0.56
	1600	0.29	0.50
	1700	0.14	0.47
	1800	0.02	0.46
	1900	–	–
	2000	–	–
4	1200	0.93	0.57
	1300	0.83	0.60
	1400	0.72	0.63
	1500	0.60	0.63
	1600	0.48	0.62
	1700	0.35	0.62
	1800	0.21	0.61
	1900	0.06	0.58
	2000	–	–
5	1200	0.97	0.58
	1300	0.89	0.61
	1400	0.72	0.65
	1500	0.60	0.68
	1600	0.64	0.72
	1700	0.55	0.75
	1800	0.46	0.79
	1900	0.35	0.82
	2000	0.25	0.86

FAN PERFORMANCE (cont.)
ECM MULTI SPEED/TORQUE MOTOR

Table 58 – RGH060 Horizontal Unit Direct Drive

Speed (Torque) tap	CFM	ESP	BHP
1	1500	0.40	0.50
	1625	0.20	0.48
	1750	0.04	0.45
	1875	–	–
	2000	–	–
	2125	–	–
	2250	–	–
	2375	–	–
	2500	–	–
2	1500	0.62	0.62
	1625	0.39	0.60
	1750	0.19	0.57
	1875	0.03	0.53
	2000	–	–
	2125	–	–
	2250	–	–
	2375	–	–
	2500	–	–
3	1500	1.04	0.87
	1625	0.87	0.88
	1750	0.68	0.88
	1875	0.48	0.84
	2000	0.28	0.84
	2125	0.07	0.84
	2250	–	–
	2375	–	–
	2500	–	–
4	1500	1.10	0.90
	1625	0.96	0.94
	1750	0.81	0.98
	1875	0.65	0.95
	2000	0.47	1.00
	2125	0.27	0.94
	2250	0.05	0.96
	2375	–	–
	2500	–	–
5	1500	1.12	0.92
	1625	1.00	0.96
	1750	0.81	1.00
	1875	0.65	1.04
	2000	0.56	1.08
	2125	0.39	0.95
	2250	0.19	1.09
	2375	–	–
	2500	–	–

Table 59 – RGH060 Vertical Unit Direct Drive

Speed (Torque) tap	CFM	ESP	BHP
1	1500	0.27	0.45
	1625	0.08	0.43
	1750	–	–
	1875	–	–
	2000	–	–
	2125	–	–
	2250	–	–
	2375	–	–
	2500	–	–
2	1500	0.48	0.57
	1625	0.26	0.55
	1750	0.08	0.53
	1875	–	–
	2000	–	–
	2125	–	–
	2250	–	–
	2375	–	–
	2500	–	–
3	1500	0.91	0.82
	1625	0.72	0.82
	1750	0.52	0.81
	1875	0.31	0.78
	2000	0.11	0.77
	2125	–	–
	2250	–	–
	2375	–	–
	2500	–	–
4	1500	0.98	0.85
	1625	0.82	0.89
	1750	0.66	0.92
	1875	0.50	0.90
	2000	0.32	0.92
	2125	0.13	0.86
	2250	–	–
	2375	–	–
	2500	–	–
5	1500	1.00	–
	1625	0.86	0.91
	1750	0.66	0.95
	1875	0.50	0.98
	2000	0.41	1.01
	2125	0.25	0.88
	2250	0.06	1.01
	2375	–	–
	2500	–	–

FAN PERFORMANCE (cont.)

Table 60 – PULLEY ADJUSTMENT

UNIT RGH		Motor/Drive Combo	Motor Pulley turns open										
			0	0.5	1	1.5	2	2.5	3	3.5	4	4.5	5
036	3 Phase	Medium Static	1175	1135	1094	1054	1013	973	932	892	851	811	770
		High Static	1466	1423	1380	1337	1294	1251	1207	1164	1121	1078	1035
048	3 Phase	Medium Static	1303	1265	1226	1188	1150	1112	1073	1035	997	958	920
		High Static	1639	1596	1553	1510	1467	1424	1380	1337	1294	1251	1208
060	3 Phase	Medium Static	1466	1423	1380	1337	1294	1251	1207	1164	1121	1078	1035
		High Static	1687	1649	1610	1572	1533	1495	1457	1418	1380	1341	1303
072	3 Phase	Standard Static	747	721	695	670	644	618	592	566	541	515	489
		Medium Static	949	927	906	884	863	841	819	798	776	755	733
		High Static	1102	1083	1063	1044	1025	1006	986	967	948	928	909
090	3 Phase	Standard Static	733	712	690	669	647	626	604	583	561	540	518
		Medium Static	936	911	887	862	838	813	788	764	739	715	690
		High Static	1084	1059	1035	1010	986	961	936	912	887	863	838
102	3 Phase	Standard Static	733	712	690	669	647	626	604	583	561	540	518
		Medium Static	936	911	887	862	838	813	788	764	739	715	690
		High Static	1084	1059	1035	1010	986	961	936	912	887	863	838
110	3 Phase	Standard Static	838	813	789	764	739	715	690	665	640	616	591
		Medium Static	1084	1059	1035	1010	986	961	936	912	887	863	838
		High Static	1240	1218	1196	1175	1153	1131	1109	1087	1066	1044	1022
120	3 Phase	Standard Static	838	813	789	764	739	715	690	665	640	616	591
		Medium Static	1084	1059	1035	1010	986	961	936	912	887	863	838
		High Static	1240	1218	1196	1175	1153	1131	1109	1087	1066	1044	1022
150	3 Phase	Standard Static	609	592	575	558	541	525	508	491	474	457	440
		Medium Static	778	761	744	727	710	694	677	660	643	626	609
		High Static	955	973	951	929	907	886	864	842	820	798	776

– Factory settings

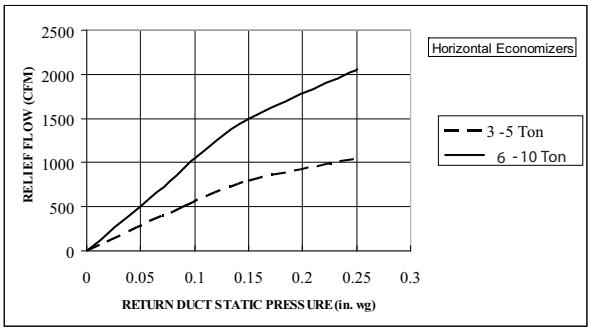

Fig. 1 Barometric Relief Flow – Horizontal 3 – 10 Ton C10472

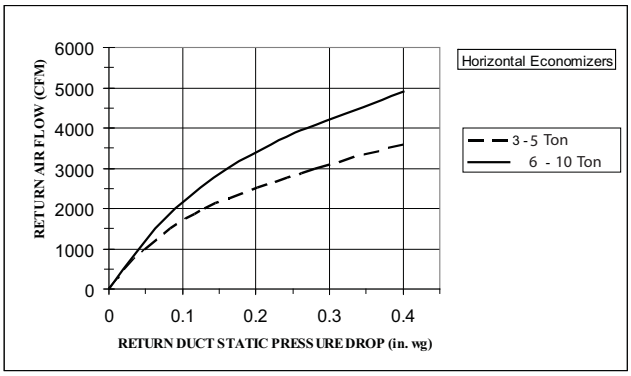

Fig. 2 Return Air Pressure Drop – Horizontal 3 – 10 Ton C10474

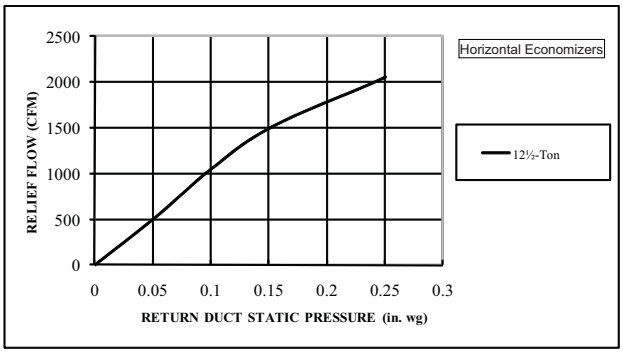

Fig. 3 Barometric Relief Flow – Horizontal 12.5 Ton C101002

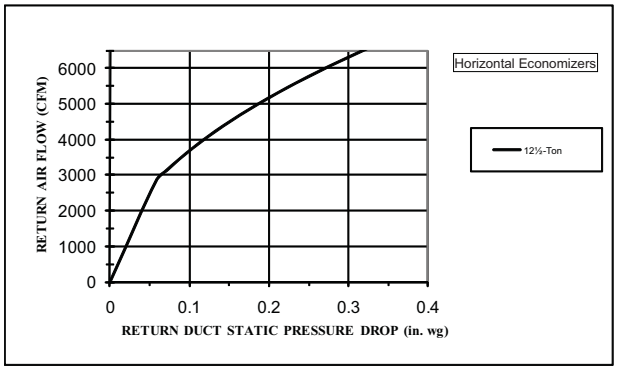

Fig. 4 Return Air Pressure Drop – Horizontal 12.5 Ton C101003

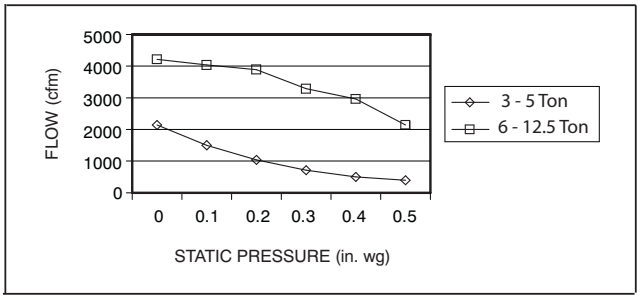

Fig. 5 Vertical Power Exhaust Performance C10996

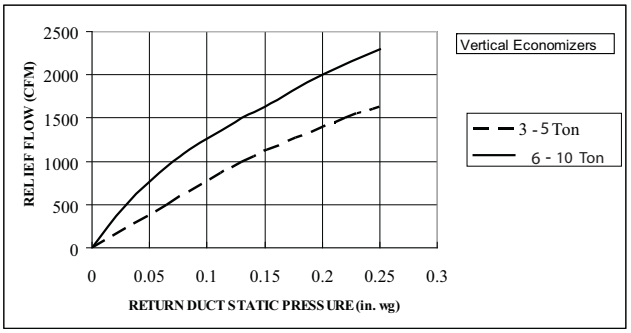

Fig. 6 Barometric Relief Flow – Vertical 3 – 10 Ton C10475

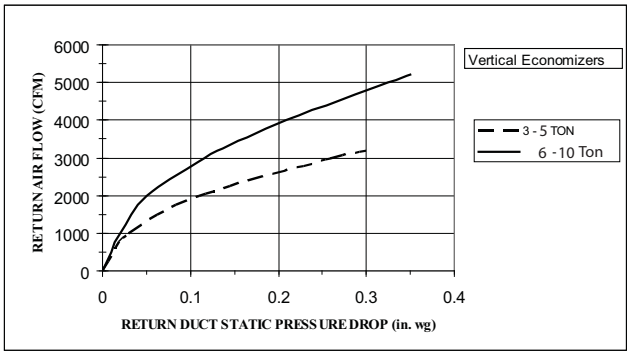

Fig. 7 Return Air Pressure Drop – Vertical 3 – 10 Ton C10477

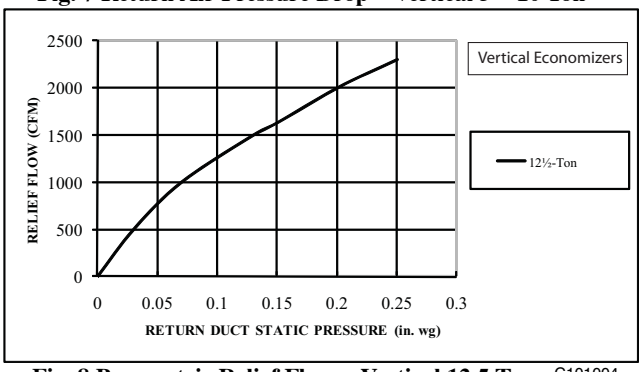

Fig. 8 Barometric Relief Flow – Vertical 12.5 Ton C101004

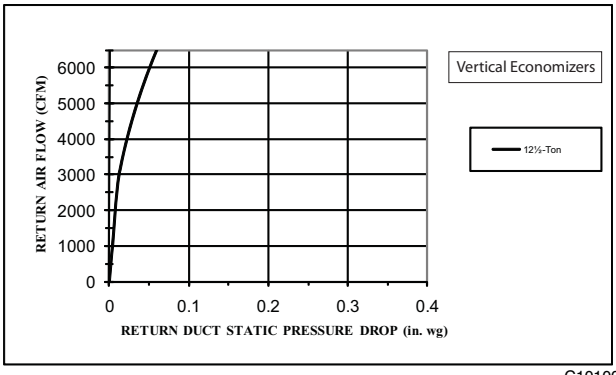

Fig. 9 Return Air Pressure Drop – Vertical 12.5 Ton C101005

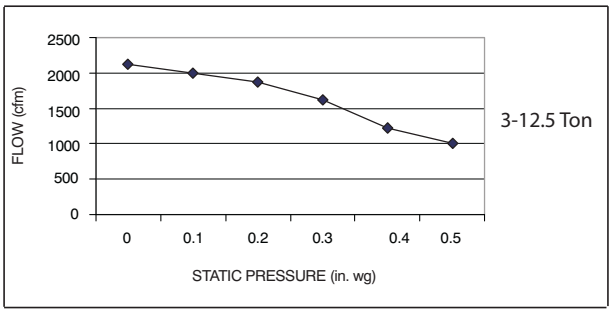

Fig. 10 Horizontal Power Exhaust Performance C10995

ELECTRICAL DATA FOR UNITS PRODUCED ON OR AFTER JULY 30, 2012

NOTE: Check the serial number of unit to verify production date.

To confirm the date of manufacture of a RGH unit, locate the unit nameplate and check the second thru fifth digits of the Serial Number. If the number listed in the first 2nd thru 5th digits of the Serial Number is 1231 or higher the unit was produced after July 30, 2012.

SERIAL NUMBER

1	2	3	4	5	6	7	8	9	10
U	1	2	3	1	1	2	3	4	5

Manufacture Location

Year of Manufacture (12 = 2012)

Week of Manufacture (fiscal calendar)

Sequence Number

ELECTRICAL INFORMATION
(UNITS PRODUCED ON OR AFTER JULY 30, 2012)

TABLE 61 – RGH036 **SINGLE STAGE COOLING WITH SINGLE SPEED INDOOR FAN MOTOR**

	VOLTAGE RANGE		COMP (ea)		OFM (ea)		IFM		
V–Ph–Hz	MIN	MAX	RLA	LRA	WATTS	FLA	TYPE	EFF at Full Load	FLA
208–1–60	187	253	16.6	79	190	1.0	DD–STD	78%	7.4
					190	1.0	STD	67%	4.9
					190	1.0	MED	67%	4.9
230–1–60	187	253	16.6	79	190	1.0	DD–STD	78%	7.4
					190	1.0	STD	67%	4.9
					190	1.0	MED	67%	4.9
208–3–60	187	253	10.4	73	190	1.0	DD–STD	78%	7.4
					190	1.0	STD	75%	5.2
					190	1.0	MED	75%	5.2
					190	1.0	HIGH	87%	6.9
230–3–60	187	253	10.4	73	190	1.0	DD–STD	78%	7.4
					190	1.0	STD	75%	5.2
					190	1.0	MED	75%	5.2
					190	1.0	HIGH	87%	6.7
460–3–60	414	506	5.8	38	190	0.5	DD–STD	78%	4.0
					190	0.5	STD	75%	2.6
					190	0.5	MED	75%	2.6
					190	0.5	HIGH	87%	3.4
575–3–60	518	633	3.8	37	190	0.5	DD–STD	78%	4.0
					190	0.5	STD	73%	1.2
					190	0.5	MED	73%	1.2
					190	0.5	HIGH	78%	2.0

TABLE 62 – RGH048 **SINGLE STAGE COOLING WITH SINGLE SPEED INDOOR FAN MOTOR**

	VOLTAGE RANGE		COMP (ea)		OFM (ea)		IFM		
V–Ph–Hz	MIN	MAX	RLA	LRA	WATTS	FLA	TYPE	EFF at Full Load	FLA
208–1–60	187	253	21.8	117	325	1.4	DD–STD	78%	7.4
					325	1.4	STD	67%	4.9
					325	1.4	MED	67%	4.9
230–1–60	187	253	21.8	117	325	1.4	DD–STD	78%	7.4
					325	1.4	STD	67%	4.9
					325	1.4	MED	67%	4.9
208–3–60	187	253	13.7	83	325	1.4	DD–STD	78%	7.4
					325	1.4	STD	75%	5.2
					325	1.4	MED	87%	5.2
					325	1.4	HIGH	89%	8.4
230–3–60	187	253	13.7	83	325	1.4	DD–STD	78%	7.4
					325	1.4	STD	75%	5.2
					325	1.4	MED	87%	4.9
					325	1.4	HIGH	89%	8.3
460–3–60	414	506	6.2	41	325	0.9	DD–STD	78%	4.0
					325	0.9	STD	75%	2.6
					325	0.9	MED	87%	2.5
					325	0.9	HIGH	89%	4.2
575–3–60	518	633	4.8	33	325	0.9	DD–STD	78%	4.0
					325	0.9	STD	73%	1.2
					325	0.9	MED	72%	1.6
					325	0.9	HIGH	77%	2.8

ELECTRICAL INFORMATION
(UNITS PRODUCED ON OR AFTER JULY 30, 2012)

TABLE 63 – RGH060 **SINGLE STAGE COOLING WITH SINGLE SPEED INDOOR FAN MOTOR**

	VOLTAGE RANGE		COMP (ea)		OFM (ea)		IFM		
V–Ph–Hz	MIN	MAX	RLA	LRA	WATTS	FLA	TYPE	EFF at Full Load	FLA
208–1–60	187	253	25.0	134	325	1.4	DD–STD	78%	7.4
					325	1.4	STD	67%	4.9
					325	1.4	MED	76%	7.0
230–1–60	187	253	25.0	134	325	1.4	DD–STD	78%	7.4
					325	1.4	STD	67%	4.9
					325	1.4	MED	76%	7.0
208–3–60	187	253	15.9	110	325	1.4	DD–STD	78%	7.4
					325	1.4	STD	75%	5.2
					325	1.4	MED	87%	6.9
					325	1.4	HIGH	89%	8.4
230–3–60	187	253	15.9	110	325	1.4	DD–STD	78%	7.4
					325	1.4	STD	75%	5.2
					325	1.4	MED	87%	6.7
					325	1.4	HIGH	89%	8.3
460–3–60	414	506	7.0	52	325	0.9	DD–STD	78%	4.0
					325	0.9	STD	75%	2.6
					325	0.9	MED	87%	3.4
					325	0.9	HIGH	89%	4.2
575–3–60	518	633	5.1	40	325	0.9	DD–STD	78%	4.0
					325	0.9	STD	73%	1.2
					325	0.9	MED	78%	2.0
					325	0.9	HIGH	77%	2.8

TABLE 64 – RGH072 **SINGLE STAGE COOLING WITH SINGLE SPEED INDOOR FAN MOTOR**

	VOLTAGE RANGE		COMP (ea)		OFM (ea)		IFM		
V–Ph–Hz	MIN	MAX	RLA	LRA	WATTS	FLA	TYPE	EFF at Full Load	FLA
208–3–60	187	253	19.0	123	325	1.5	STD	87%	5.2
					325	1.5	MED	89%	8.4
					325	1.5	HIGH	83%	13.6
230–3–60	187	253	19.0	123	325	1.5	STD	87%	4.9
					325	1.5	MED	89%	8.3
					325	1.5	HIGH	83%	12.7
460–3–60	414	506	9.7	62	325	0.8	STD	87%	2.5
					325	0.8	MED	89%	4.2
					325	0.8	HIGH	83%	6.4
575–3–60	518	633	7.4	50	325	0.6	STD	72%	1.6
					325	0.6	MED	77%	2.8
					325	0.6	HIGH	81%	5.6

ELECTRICAL INFORMATION
(UNITS PRODUCED ON OR AFTER JULY 30, 2012)

TABLE 65 – RGH090 **2–STAGE COOLING WITH SINGLE SPEED INDOOR FAN MOTOR**

	VOLTAGE RANGE		COMP (Cir 1)		COMP (Cir 2)		OFM (ea)		IFM		
V–Ph–Hz	MIN	MAX	RLA	LRA	RLA	LRA	WATTS	FLA	TYPE	EFF at Full Load	FLA
208–3–60	187	253	13.6	83	13.6	83	325	1.5	STD	87%	5.2
							325	1.5	MED	87%	6.9
							325	1.5	HIGH	87%	10.6
230–3–60	187	253	13.6	83	13.6	83	325	1.5	STD	87%	4.9
							325	1.5	MED	87%	6.7
							325	1.5	HIGH	87%	10.6
460–3–60	414	506	6.1	41	6.1	41	325	0.8	STD	87%	2.5
							325	0.8	MED	87%	3.4
							325	0.8	HIGH	87%	5.3
575–3–60	518	633	4.2	33	4.2	33	325	0.6	STD	72%	1.6
							325	0.6	MED	78%	2
							325	0.6	HIGH	77%	2.8

TABLE 66 – RGH102 **2–STAGE COOLING WITH SINGLE SPEED INDOOR FAN MOTOR**

	VOLTAGE RANGE		COMP (Cir 1)		COMP (Cir 2)		OFM (ea)		IFM		
V–Ph–Hz	MIN	MAX	RLA	LRA	RLA	LRA	WATTS	FLA	TYPE	EFF at Full Load	FLA
208–3–60	187	253	13.7	83	13.7	83	325	1.5	STD	87%	5.2
							325	1.5	MED	87%	6.9
							325	1.5	HIGH	87%	10.6
230–3–60	187	253	13.7	83	13.7	83	325	1.5	STD	87%	4.9
							325	1.5	MED	87%	6.7
							325	1.5	HIGH	87%	10.6
460–3–60	414	506	6.2	41	6.2	41	325	0.8	STD	87%	2.5
							325	0.8	MED	87%	3.4
							325	0.8	HIGH	87%	5.3
575–3–60	518	633	4.8	33	4.8	33	325	0.6	STD	72%	1.6
							325	0.6	MED	78%	2
							325	0.6	HIGH	77%	2.8

TABLE 67 – RGH110 **2–STAGE COOLING WITH SINGLE SPEED INDOOR FAN MOTOR**

	VOLTAGE RANGE		COMP (Cir 1)		COMP (Cir 2)		OFM (ea)		IFM		
V–Ph–Hz	MIN	MAX	RLA	LRA	RLA	LRA	WATTS	FLA	TYPE	EFF at Full Load	FLA
208–3–60	187	253	15.9	110	15.9	110	610	7.4	STD	87%	6.9
							610	7.4	MED	87%	10.6
							610	7.4	HIGH	83%	13.6
230–3–60	187	253	15.9	110	15.9	110	610	7.4	STD	87%	6.7
							610	7.4	MED	87%	10.6
							610	7.4	HIGH	83%	12.7
460–3–60	414	506	7.0	52	7.0	52	610	3.6	STD	87%	3.4
							610	3.6	MED	87%	5.3
							610	3.6	HIGH	83%	6.4
575–3–60	518	633	5.1	40	5.1	40	610	3.6	STD	78%	2
							610	3.6	MED	77%	2.8
							610	3.6	HIGH	81%	5.6

ELECTRICAL INFORMATION
(UNITS PRODUCED ON OR AFTER JULY 30, 2012)

TABLE 68 – RGH120 **2–STAGE COOLING WITH SINGLE SPEED INDOOR FAN MOTOR**

	VOLTAGE RANGE		COMP (Cir 1)		COMP (Cir 2)		OFM (ea)		IFM		
V–Ph–Hz	MIN	MAX	RLA	LRA	RLA	LRA	WATTS	FLA	TYPE	EFF at Full Load	FLA
208–3–60	187	253	15.9	110	15.9	110	1070	6.2	STD	87%	6.9
							1070	6.2	MED	87%	10.6
							1070	6.2	HIGH	83%	13.6
230–3–60	187	253	15.9	110	15.9	110	1070	6.2	STD	87%	6.7
							1070	6.2	MED	87%	10.6
							1070	6.2	HIGH	83%	12.7
460–3–60	414	506	7.7	52	7.7	52	1070	3.1	STD	87%	3.4
							1070	3.1	MED	87%	5.3
							1070	3.1	HIGH	83%	6.4
575–3–60	518	633	5.7	39	5.7	39	1070	2.5	STD	78%	2
							1070	2.5	MED	77%	2.8
							1070	2.5	HIGH	81%	5.6

TABLE 69 – RGH150 **2–STAGE COOLING WITH SINGLE SPEED INDOOR FAN MOTOR**

	VOLTAGE RANGE		COMP (Cir 1)		COMP (Cir 2)		OFM (ea)		IFM		
V–Ph–Hz	MIN	MAX	RLA	LRA	RLA	LRA	WATTS	FLA	TYPE	EFF at Full Load	FLA
208–3–60	187	253	19.0	123	19.0	123	280	1.5	STD	89%	8.4
							280	1.5	MED	87%	10.6
							280	1.5	HIGH	90%	20.4
230–3–60	187	253	19.0	123	19.0	123	280	1.5	STD	89%	8.3
							280	1.5	MED	87%	10.6
							280	1.5	HIGH	90%	20.4
460–3–60	414	506	9.7	62	9.7	62	280	0.8	STD	89%	4.2
							280	0.8	MED	87%	5.3
							280	0.8	HIGH	90%	10.2
575–3–60	518	633	7.4	50	7.4	50	280	0.7	STD	77%	2.8
							280	0.7	MED	77%	2.8
							280	0.7	HIGH	94%	9

ELECTRICAL INFORMATION
(UNITS PRODUCED ON OR AFTER JULY 30, 2012)

TABLE 70 – RGH090 **2–STAGE COOLING WITH 2–SPEED INDOOR FAN MOTOR**

	VOLTAGE RANGE		COMP (Cir 1)		COMP (Cir 2)		OFM (ea)		IFM		
V–Ph–Hz	MIN	MAX	RLA	LRA	RLA	LRA	WATTS	FLA	TYPE	EFF at Full Load	FLA
208–3–60	187	253	13.6	83	13.6	83	325	1.5	STD	84%	5.8
							325	1.5	MED	77%	7.1
							325	1.5	HIGH	82%	10.8
230–3–60	187	253	13.6	83	13.6	83	325	1.5	STD	84%	5.6
							325	1.5	MED	77%	6.8
							325	1.5	HIGH	82%	9.8
460–3–60	414	506	6.1	41	6.1	41	325	0.8	STD	79%	2.9
							325	0.8	MED	77%	3.8
							325	0.8	HIGH	82%	4.9
575–3–60	518	633	4.2	33	4.2	33	325	0.6	STD	81%	2.8
							325	0.6	MED	80%	3.5
							325	0.6	HIGH	84%	4.5

TABLE 71 – RGH102 **2–STAGE COOLING WITH 2–SPEED INDOOR FAN MOTOR**

	VOLTAGE RANGE		COMP (Cir 1)		COMP (Cir 2)		OFM (ea)		IFM		
V–Ph–Hz	MIN	MAX	RLA	LRA	RLA	LRA	WATTS	FLA	TYPE	EFF at Full Load	FLA
208–3–60	187	253	13.7	83	13.7	83	325	1.5	STD	84%	5.8
							325	1.5	MED	77%	7.1
							325	1.5	HIGH	82%	10.8
230–3–60	187	253	13.7	83	13.7	83	325	1.5	STD	84%	5.6
							325	1.5	MED	77%	6.8
							325	1.5	HIGH	82%	9.8
460–3–60	414	506	6.2	41	6.2	41	325	0.8	STD	79%	2.9
							325	0.8	MED	77%	3.8
							325	0.8	HIGH	82%	4.9
575–3–60	518	633	4.8	33	4.8	33	325	0.6	STD	81%	2.8
							325	0.6	MED	80%	3.5
							325	0.6	HIGH	84%	4.5

TABLE 72 – RGH110 **2–STAGE COOLING WITH 2–SPEED INDOOR FAN MOTOR**

	VOLTAGE RANGE		COMP (Cir 1)		COMP (Cir 2)		OFM (ea)		IFM		
V–Ph–Hz	MIN	MAX	RLA	LRA	RLA	LRA	WATTS	FLA	TYPE	EFF at Full Load	FLA
208–3–60	187	253	15.9	110	15.9	110	610	7.4	STD	77%	7.1
							610	7.4	MED	82%	10.8
							610	7.4	HIGH	84%	13.6
230–3–60	187	253	15.9	110	15.9	110	610	7.4	STD	77%	6.8
							610	7.4	MED	82%	9.8
							610	7.4	HIGH	84%	12.7
460–3–60	414	506	7.0	52	7.0	52	610	3.6	STD	77%	3.8
							610	3.6	MED	82%	4.9
							610	3.6	HIGH	84%	6.4
575–3–60	518	633	5.1	40	5.1	40	610	3.6	STD	80%	3.5
							610	3.6	MED	84%	4.5
							610	3.6	HIGH	83%	6.2

ELECTRICAL INFORMATION
(UNITS PRODUCED ON OR AFTER JULY 30, 2012)

TABLE 73 – RGH120 **2–STAGE COOLING WITH 2–SPEED INDOOR FAN MOTOR**

V–Ph–Hz	VOLTAGE RANGE		COMP (Cir 1)		COMP (Cir 2)		OFM (ea)		IFM		
	MIN	MAX	RLA	LRA	RLA	LRA	WATTS	FLA	TYPE	EFF at Full Load	FLA
208–3–60	187	253	15.9	110	15.9	110	1070	6.2	STD	77%	7.1
							1070	6.2	MED	82%	10.8
							1070	6.2	HIGH	84%	13.6
230–3–60	187	253	15.9	110	15.9	110	1070	6.2	STD	77%	6.8
							1070	6.2	MED	82%	9.8
							1070	6.2	HIGH	84%	12.7
460–3–60	414	506	7.7	52	7.7	52	1070	3.1	STD	77%	3.8
							1070	3.1	MED	82%	4.9
							1070	3.1	HIGH	84%	6.4
575–3–60	518	633	5.7	39	5.7	39	1070	2.5	STD	80%	3.5
							1070	2.5	MED	84%	4.5
							1070	2.5	HIGH	83%	6.2

TABLE 74 – RGH150 **2–STAGE COOLING WITH 2–SPEED INDOOR FAN MOTOR**

V–Ph–Hz	VOLTAGE RANGE		COMP (Cir 1)		COMP (Cir 2)		OFM (ea)		IFM		
	MIN	MAX	RLA	LRA	RLA	LRA	WATTS	FLA	TYPE	EFF at Full Load	FLA
208–3–60	187	253	19.0	123	19.0	123	280	1.5	STD	85%	8.6
							280	1.5	MED	82%	10.8
							280	1.5	HIGH	90%	20.4
230–3–60	187	253	19.0	123	19.0	123	280	1.5	STD	85%	7.8
							280	1.5	MED	82%	9.8
							280	1.5	HIGH	90%	20.4
460–3–60	414	506	9.7	62	9.7	62	280	0.8	STD	85%	3.8
							280	0.8	MED	82%	4.9
							280	0.8	HIGH	90%	10.2
575–3–60	518	633	7.4	50	7.4	50	280	0.7	STD	84%	4.5
							280	0.7	MED	84%	4.5
							280	0.7	HIGH	94%	9

ELECTRICAL INFORMATION
(UNITS PRODUCED ON OR AFTER JULY 30, 2012)

TABLE 75 – UNIT WIRE/FUSE OR HACR BREAKER SIZING DATA WITH 1 SPEED INDOOR FAN MOTOR

UNIT	NOM. V–Ph–Hz	IFM TYPE	NO C.O. or UNPWR C.O.							
			NO P.E.				w/ P.E. (pwrd fr/ unit)			
			MCA	MAX FUSE or HACR BRKR	DISC. SIZE		MCA	MAX FUSE or HACR BRKR	DISC. SIZE	
					FLA	LRA			FLA	LRA
RGH036	208/230–1–60	DD–STD	30	45	29	88	32	45	31	90
		STD	27	40	26	93	29	45	28	95
		MED	27	40	26	93	29	45	28	95
	208/230–3–60	DD–STD	22	30	22	82	24	30	24	84
		STD	20	25	19	94	22	30	21	96
		MED	20	25	19	94	22	30	21	96
		HIGH	21/21	30/30	21/21	132	23/23	30/30	23/23	134
	460–3–60	DD–STD	12	15	12	43	13	15	13	44
		STD	11	15	10	48	12	15	11	49
		MED	11	15	10	48	12	15	11	49
		HIGH	12	15	11	67	13	15	12	68
	575–3–60	DD–STD	10	15	10	42	12	15	12	44
		STD	7	15	6	45	9	15	9	47
		MED	7	15	6	45	9	15	9	47
		HIGH	8	15	7	49	10	15	9	51
RGH048	208/230–1–60	DD–STD	37	50	35	127	38	50	37	129
		STD	34	50	32	132	36	50	35	134
		MED	34	50	32	132	36	50	35	134
	208/230–3–60	DD–STD	26	30	26	93	28	40	28	95
		STD	24	30	23	105	26	30	26	107
		MED	24/24	30/30	23/23	122	26/26	30/30	26/25	124
		HIGH	27/27	40/40	27/27	158	29/29	40/40	29/29	160
	460–3–60	DD–STD	13	15	13	47	14	20	14	48
		STD	12	15	11	52	13	15	12	53
		MED	12	15	11	61	13	15	12	62
		HIGH	13	15	13	79	14	20	14	80
	575–3–60	DD–STD	11	15	11	39	13	15	13	41
		STD	9	15	8	42	10	15	10	44
		MED	9	15	8	42	11	15	11	44
		HIGH	10	15	10	57	12	15	12	59

ELECTRICAL INFORMATION
(UNITS PRODUCED ON OR AFTER JULY 30, 2012) cont.

Table 75 – UNIT WIRE/FUSE OR HACR BREAKER SIZING DATA WITH 1 SPEED INDOOR FAN MOTOR (cont)

UNIT	NOM. V–Ph–Hz	IFM TYPE	NO C.O. or UNPWR C.O.							
			NO P.E.				w/ P.E. (pwrd fr/ unit)			
			MCA	MAX FUSE or HACR BRKR	DISC. SIZE		MCA	MAX FUSE or HACR BRKR	DISC. SIZE	
					FLA	LRA			FLA	LRA
RGH060	208/230–1–60	DD–STD	41	60	39	144	42	60	41	146
		STD	38	60	36	149	40	60	38	151
		MED	40	60	38	174	42	60	41	176
	208/230–3–60	DD–STD	29	40	28	120	31	45	31	122
		STD	27	40	26	132	29	40	28	134
		MED	29/28	40/40	28/28	170	31/30	45/45	30/30	172
		HIGH	30/30	45/45	30/29	185	32/32	45/45	32/32	187
	460–3–60	DD–STD	14	20	14	58	15	20	15	59
		STD	13	15	12	63	14	20	13	64
		MED	14	20	13	82	15	20	14	83
		HIGH	14	20	14	90	15	20	15	91
	575–3–60	DD–STD	12	15	12	46	14	15	14	48
		STD	9	15	8	49	11	15	10	51
		MED	10	15	9	53	12	15	11	55
		HIGH	11	15	10	64	12	15	12	66
RGH072	208/230–3–60	STD	32/32	50/50	31/31	165	36/36	50/50	36/35	169
		MED	36/36	50/50	35/35	201	39/39	50/50	39/39	205
		HIGH	41/40	50/50	41/40	217	45/44	60/60	45/44	221
	460–3–60	STD	17	25	16	84	18	25	18	86
		MED	18	25	18	102	20	25	20	104
		HIGH	21	25	20	110	22	30	22	112
	575–3–60	STD	13	15	12	61	16	20	16	65
		MED	14	20	13	76	18	20	17	80
		HIGH	17	20	16	90	20	25	21	94
RGH090	208/230–3–60	STD	39/39	50/50	41/40	208	43/43	50/50	45/45	212
		MED	41/41	50/50	43/42	229	45/45	50/50	47/47	233
		HIGH	45	50	47	258	48	60	51	262
	460–3–60	STD	18	20	19	104	20	25	21	106
		MED	19	25	20	114	21	25	22	116
		HIGH	21	25	22	129	23	25	24	131
	575–3–60	STD	13	15	13	77	17	20	17	81
		MED	13	15	13	81	17	20	18	85
		HIGH	14	15	14	92	18	20	19	96

ELECTRICAL INFORMATION
(UNITS PRODUCED ON OR AFTER JULY 30, 2012) cont.

Table 75 – UNIT WIRE/FUSE OR HACR BREAKER SIZING DATA WITH 1 SPEED INDOOR FAN MOTOR (cont)

UNIT	NOM. V–Ph–Hz	IFM TYPE	NO C.O. or UNPWR C.O.							
			NO P.E.				w/ P.E. (pwrd fr/ unit)			
			MCA	MAX FUSE or HACR BRKR	DISC. SIZE		MCA	MAX FUSE or HACR BRKR	DISC. SIZE	
					FLA	LRA			FLA	LRA
RGH102	208/230–3–60	STD	39/39	50/50	41/41	208	43/43	50/50	45/45	212
		MED	41/41	50/50	43/43	229	45/45	50/50	47/47	233
		HIGH	45	50	47	258	49	60	52	262
	460–3–60	STD	19	20	19	104	20	25	21	106
		MED	19	25	20	114	21	25	22	116
		HIGH	21	25	22	129	23	25	24	131
	575–3–60	STD	14	15	14	77	18	20	19	81
		MED	14	20	15	81	18	20	19	85
		HIGH	15	20	16	92	19	20	20	96
RGH110	208/230–3–60	STD	51/50	60/60	53/53	284	54/54	60/60	57/57	288
		MED	54	60	57	313	58	70	62	317
		HIGH	57/56	70/60	61/60	315	61/60	70/70	65/64	319
	460–3–60	STD	23	25	24	136	25	30	26	138
		MED	25	30	26	151	27	30	28	153
		HIGH	26	30	28	152	28	30	30	154
	575–3–60	STD	18	20	18	95	21	25	23	99
		MED	18	20	19	106	22	25	23	110
		HIGH	21	25	22	120	25	30	27	124
RGH120	208/230–3–60	STD	49/49	60/60	52/51	309	53/53	60/60	56/56	313
		MED	53	60	56	338	57	70	60	342
		HIGH	56/55	60/60	59/58	340	60/59	70/70	64/63	344
	460–3–60	STD	24	30	25	148	26	30	27	150
		MED	26	30	27	163	28	30	29	165
		HIGH	27	30	29	164	29	35	31	166
	575–3–60	STD	18	20	18	105	22	25	23	109
		MED	19	20	19	116	22	25	24	120
		HIGH	21	25	22	130	25	30	27	134
RGH150	208/230–3–60	STD	56/56	70/70	59/58	330	60/60	70/70	63/63	334
		MED	58	70	61	344	62	80	65	348
		HIGH	68	80	72	350	72	80	77	354
	460–3–60	STD	29	35	30	166	31	35	32	168
		MED	30	35	31	173	32	40	33	175
		HIGH	35	40	37	176	37	45	39	178
	575–3–60	STD	22	25	23	128	26	30	27	132
		MED	22	25	23	128	26	30	27	132
		HIGH	29	35	30	140	32	40	34	144

ELECTRICAL INFORMATION
(UNITS PRODUCED ON OR AFTER JULY 30, 2012)

TABLE 76 – UNIT WIRE/FUSE OR HACR BREAKER SIZING DATA WITH 2 SPEED INDOOR FAN MOTOR

UNIT	NOM. V–Ph–Hz	IFM TYPE	NO C.O. or UNPWR C.O.							
			NO P.E.				w/ P.E. (pwrd fr/ unit)			
			MCA	MAX FUSE or HACR BRKR	DISC. SIZE FLA	DISC. SIZE LRA	MCA	MAX FUSE or HACR BRKR	DISC. SIZE FLA	DISC. SIZE LRA
RGH090	208/230–3–60	STD	40/40	50/50	41/41	195	44/43	50/50	46/46	199
		MED	41/41	50/50	43/43	199	45/45	50/50	47/47	203
		HIGH	45/44	50/50	47/46	249	49/48	60/60	52/50	253
	460–3–60	STD	19	20	19	97	20	25	21	99
		MED	20	25	20	100	21	25	22	102
		HIGH	21	25	22	125	22	25	24	127
	575–3–60	STD	14	15	14	79	18	20	19	83
		MED	15	20	15	83	18	20	19	87
		HIGH	16	20	16	92	19	25	21	96
RGH102	208/230–3–60	STD	40/40	50/50	42/41	195	44/44	50/50	46/46	199
		MED	41/41	50/50	43/43	199	45/45	50/50	47/47	203
		HIGH	45/44	50/50	47/46	249	49/48	60/60	52/51	253
	460–3–60	STD	19	25	19	97	21	25	22	99
		MED	20	25	20	100	22	25	23	102
		HIGH	21	25	22	125	23	25	24	127
	575–3–60	STD	15	20	16	79	19	20	20	83
		MED	16	20	16	83	20	25	21	87
		HIGH	17	20	18	92	21	25	22	96
RGH110	208/230–3–60	STD	51/50	60/60	53/53	254	55/54	60/60	58/57	258
		MED	54/53	60/60	58/56	304	58/57	70/70	62/61	308
		HIGH	57/56	70/60	61/60	315	61/60	70/70	65/64	319
	460–3–60	STD	24	30	25	122	25	30	27	124
		MED	25	30	26	147	27	30	28	149
		HIGH	26	30	28	152	28	30	30	154
	575–3–60	STD	19	20	20	97	23	25	24	101
		MED	20	25	21	106	24	25	25	110
		HIGH	22	25	23	120	26	30	27	124
RGH120	208/230–3–60	STD	50/49	60/60	52/52	279	53/53	60/60	56/56	283
		MED	53/52	60/60	56/55	329	57/56	70/60	60/59	333
		HIGH	56/55	60/60	59/58	340	60/59	70/70	64/63	344
	460–3–60	STD	25	30	26	134	26	30	28	136
		MED	26	30	27	159	28	30	29	161
		HIGH	27	30	29	164	29	35	31	166
	575–3–60	STD	19	25	20	107	23	25	24	111
		MED	20	25	21	116	24	30	26	120
		HIGH	22	25	23	130	26	30	27	134
RGH150	208/230–3–60	STD	56/56	70/60	59/58	311	60/59	70/70	63/62	315
		MED	59/58	70/70	61/60	335	62/61	80/70	66/65	339
		HIGH	68	80	72	350	72	80	77	354
	460–3–60	STD	28	35	29	157	30	35	32	159
		MED	30	35	31	169	31	40	33	171
		HIGH	35	40	37	176	37	45	39	178
	575–3–60	STD	24	30	25	128	28	30	29	132
		MED	24	30	25	128	28	30	29	132
		HIGH	29	35	30	140	32	40	34	144

LEGEND:

BRKR	–	Circuit breaker
CO	–	Convenience outlet
DISC	–	Disconnect
FLA	–	Full load amps
IFM	–	Indoor fan motor
LRA	–	Locked rotor amps
MCA	–	Minimum circuit amps
MOCP	–	MAX FUSE or HACR Breaker
PE	–	Power exhaust
UNPWR CO	–	Unpowered convenient outlet

NOTES:

1. In compliance with NEC requirements for multimotor and combination load equipment (refer to NEC Articles 430 and 440), the overcurrent protective device for the unit shall be fuse or HACR breaker. Canadian units may be fuse or circuit breaker.
2. **Unbalanced 3-Phase Supply Voltage**
   Never operate a motor where a phase imbalance in supply voltage is greater than 2%. Use the following formula to determine the percentage of voltage imbalance.

$$\text{\% Voltage Imbalance} = 100 \times \frac{\text{max voltage deviation from average voltage}}{\text{average voltage}}$$

Example: Supply voltage is 230-3-60

AB = 224 v
BC = 231 v
AC = 226 v

$$\text{Average Voltage} = \frac{(224 + 231 + 226)}{3} = \frac{681}{3} = 227$$

Determine maximum deviation from average voltage.
(AB) 227 – 224 = 3 v
(BC) 231 – 227 = 4 v
(AC) 227 – 226 = 1 v
Maximum deviation is 4 v.
Determine percent of voltage imbalance.

$$\text{\% Voltage Imbalance} = 100 \times \frac{4}{227} = 1.76\%$$

This amount of phase imbalance is satisfactory as it is below the maximum allowable 2%.

IMPORTANT: If the supply voltage phase imbalance is more than 2%, contact your local electric utility company immediately.

ELECTRICAL INFORMATION
(UNITS PRODUCED PRIOR TO JULY 30, 2012)

NOTE: Check the serial number of unit to verify production date.

To confirm the date of manufacture of a RGH unit, locate the unit nameplate and check the second thru fifth digits of the Serial Number. If the number listed in the first 2nd thru 5th digits of the Serial Number is 1230 or lower the unit was produced prior to July 30, 2012.

SERIAL NUMBER

1	2	3	4	5	6	7	8	9	10
U	1	2	3	1	1	2	3	4	5

Manufacture Location

Year of Manufacture
(12 = 2012)

Week of Manufacture
(fiscal calendar)

Sequence Number

ELECTRICAL INFORMATION
(UNITS PRODUCED PRIOR TO JULY 30, 2012)

Table 77 – RGH036 1–STAGE COOLING WITH 1 SPEED INDOOR FAN MOTOR 3 TONS

V–Ph–Hz	VOLTAGE RANGE		COMP (ea)		OFM (ea)		IFM		
	MIN	MAX	RLA	LRA	WATTS	FLA	TYPE	EFF at Full Load	FLA
208–1–60	187	253	16.6	79	190	1.0	DD–STD	84%	7.4
							BD–STD	70%	4.9
							MED	70%	4.9
230–1–60	187	253	16.6	79	190	1.0	DD–STD	84%	7.4
							BD–STD	70%	4.9
							MED	70%	4.9
208–3–60	187	253	10.4	73	190	1.0	DD–STD	84%	7.4
							BD–STD	70%	4.9
							MED	70%	4.9
							HIGH	80%	5.2
230–3–60	187	253	10.4	73	190	1.0	DD–STD	84%	7.4
							BD–STD	70%	4.9
							MED	70%	4.9
							HIGH	80%	5.2
460–3–60	414	506	5.8	38	190	0.5	DD–STD	84%	4.0
							BD–STD	70%	2.1
							MED	70%	2.1
							HIGH	80%	2.6
575–3–60	518	633	3.8	37	190	0.5	DD–STD	84%	4.0
							BD–STD	71%	1.9
							MED	71%	1.9
							HIGH	80%	2.0

Table 78 – RGH048 1–STAGE COOLING WITH 1 SPEED INDOOR FAN MOTOR 4 TONS

V–Ph–Hz	VOLTAGE RANGE		COMP (ea)		OFM (ea)		IFM		
	MIN	MAX	RLA	LRA	WATTS	FLA	TYPE	EFF at Full Load	FLA
208–1–60	187	253	21.8	117	325	1.4	DD–STD	84%	7.4
							BD–STD	70%	4.9
							MED	70%	4.9
230–1–60	187	253	21.8	117	325	1.4	DD–STD	84%	7.4
							BD–STD	70%	4.9
							MED	70%	4.9
208–3–60	187	253	13.7	83	325	1.4	DD–STD	84%	7.4
							BD–STD	70%	4.9
							MED	70%	4.9
							HIGH	80%	5.2
230–3–60	187	253	13.7	83	325	1.4	DD–STD	84%	7.4
							BD–STD	70%	4.9
							MED	70%	4.9
							HIGH	80%	5.2
460–3–60	414	506	6.2	41	325	0.9	DD–STD	84%	4.0
							BD–STD	70%	2.1
							MED	70%	2.1
							HIGH	80%	2.6
575–3–60	518	633	4.8	37	325	0.9	DD–STD	84%	4.0
							BD–STD	71%	1.9
							MED	71%	1.9
							HIGH	80%	2.0

ELECTRICAL INFORMATION
(UNITS PRODUCED PRIOR TO JULY 30, 2012) (CONT.)

Table 79 – RGH060 1–STAGE COOLING WITH 1 SPEED INDOOR FAN MOTOR 5 TONS

V–Ph–Hz	VOLTAGE RANGE		COMP (ea)		OFM (ea)		IFM		
	MIN	MAX	RLA	LRA	WATTS	FLA	TYPE	EFF at Full Load	FLA
208–1–60	187	253	25.0	134	325	1.4	DD–STD	84%	7.4
							BD–STD	70%	4.9
							MED	70%	7.0
230–1–60	187	253	25.0	134	325	1.4	DD–STD	84%	7.4
							BD–STD	70%	7.0
							MED	70%	4.9
208–3–60	187	253	15.9	110	325	1.4	DD–STD	84%	7.4
							BD–STD	70%	4.9
							MED	80%	5.2
							HIGH	81%	7.5
230–3–60	187	253	15.9	110	325	1.4	DD–STD	84%	7.4
							BD–STD	70%	4.9
							MED	80%	5.2
							HIGH	81%	7.5
460–3–60	414	506	7.0	52	325	0.9	DD–STD	84%	4.0
							BD–STD	70%	2.1
							MED	80%	2.6
							HIGH	81%	3.4
575–3–60	518	633	5.1	40	325	0.9	DD–STD	84%	4.0
							BD–STD	71%	1.9
							MED	81%	2.0
							HIGH	81%	2.8

Table 80 – RGH072 1–STAGE COOLING WITH 1 SPEED INDOOR FAN MOTOR 6 TONS

V–Ph–Hz	VOLTAGE RANGE		COMP (ea)		OFM (ea)		IFM		
	MIN	MAX	RLA	LRA	WATTS	FLA	TYPE	EFF at Full Load	FLA
208–3–60	187	253	19.0	123	325	1.5	STD	80%	5.2
							MED	81%	7.5
							HIGH	81%	15.0
230–3–60	187	253	19.0	123	325	1.5	STD	80%	5.2
							MED	81%	7.5
							HIGH	81%	15.0
460–3–60	414	506	9.7	62	325	0.8	STD	80%	2.6
							MED	81%	3.4
							HIGH	81%	7.4
575–3–60	518	633	7.4	50	325	0.6	STD	80%	2.4
							MED	81%	2.8
							HIGH	81%	5.6

Table 81 – RGH090 2–STAGE COOLING WITH 1 SPEED INDOOR FAN MOTOR 7.5 TONS

V–Ph–Hz	VOLTAGE RANGE		COMP (Cir 1)		COMP (Cir 2)		OFM (ea)		IFM		
	MIN	MAX	RLA	LRA	RLA	LRA	WATTS	FLA	TYPE	EFF at Full Load	FLA
208–3–60	187	253	13.6	83	13.6	83	325	1.5	STD	80%	5.2
									MED	80%	5.2
									HIGH	80%	10.0
230–3–60	187	253	13.6	83	13.6	83	325	1.5	STD	80%	5.2
									MED	80%	5.2
									HIGH	80%	10.0
460–3–60	414	506	6.1	41	6.1	41	325	0.8	STD	80%	2.6
									MED	80%	2.6
									HIGH	80%	4.4
575–3–60	518	633	4.2	33	4.2	33	325	0.6	STD	80%	1.2
									MED	80%	2.0
									HIGH	81%	2.8

ELECTRICAL INFORMATION
(UNITS PRODUCED PRIOR TO JULY 30, 2012) (CONT.)

Table 82 – RGH102 2–STAGE COOLING WITH 1 SPEED INDOOR FAN MOTOR 8.5 TONS

V–Ph–Hz	VOLTAGE RANGE		COMP (Cir 1)		COMP (Cir 2)		OFM (ea)		IFM		
	MIN	MAX	RLA	LRA	RLA	LRA	WATTS	FLA	TYPE	EFF at Full Load	FLA
208–3–60	187	253	13.7	83	13.7	83	325	1.5	STD	80%	5.2
									MED	80%	5.2
									HIGH	80%	10.0
230–3–60	187	253	13.7	83	13.7	83	325	1.5	STD	80%	5.2
									MED	80%	5.2
									HIGH	80%	10.0
460–3–60	414	506	6.2	41	6.2	41	325	0.8	STD	80%	2.6
									MED	80%	2.6
									HIGH	80%	4.4
575–3–60	518	633	4.8	33	4.8	33	325	0.6	STD	80%	1.2
									MED	80%	2.0
									HIGH	81%	2.8

Table 83 – RGH110 2–STAGE COOLING WITH 1 SPEED INDOOR FAN MOTOR 10 TONS

V–Ph–Hz	VOLTAGE RANGE		COMP (Cir 1)		COMP (Cir 2)		OFM (ea)		IFM		
	MIN	MAX	RLA	LRA	RLA	LRA	WATTS	FLA	TYPE	EFF at Full Load	FLA
208–3–60	187	253	15.9	110.0	15.9	110.0	610	7.4	STD	80%	5.2
									MED	81%	10.0
									HIGH	81%	15.0
230–3–60	187	253	15.9	110.0	15.9	110.0	610	7.4	STD	80%	5.2
									MED	81%	10.0
									HIGH	81%	15.0
460–3–60	414	506	7.1	52.0	7.1	52.0	610	3.6	STD	80%	2.6
									MED	81%	4.4
									HIGH	81%	7.4
575–3–60	518	633	5.1	39.5	5.1	39.5	610	3.6	STD	80%	2.0
									MED	81%	2.8
									HIGH	81%	5.6

Table 84 – RGH120 2–STAGE COOLING WITH 1 SPEED INDOOR FAN MOTOR 10 TONS

V–Ph–Hz	VOLTAGE RANGE		COMP (Cir 1)		COMP (Cir 2)		OFM (ea)		IFM		
	MIN	MAX	RLA	LRA	RLA	LRA	WATTS	FLA	TYPE	EFF at Full Load	FLA
208–3–60	187	253	15.9	110	15.9	110	1070	6.2	STD	80%	5.2
									MED	81%	10.0
									HIGH	81%	15.0
230–3–60	187	253	15.9	110	15.9	110	1070	6.2	STD	80%	5.2
									MED	81%	10.0
									HIGH	81%	15.0
460–3–60	414	506	7.7	52	7.7	52	1070	3.1	STD	80%	2.6
									MED	81%	4.4
									HIGH	81%	7.4
575–3–60	518	633	5.7	39	5.7	39	1070	2.5	STD	80%	2.0
									MED	81%	2.8
									HIGH	81%	5.6

ELECTRICAL INFORMATION
(UNITS PRODUCED PRIOR TO JULY 30, 2012) (CONT.)

Table 85 – RGH150, 2–STAGE COOLING WITH 1 SPEED INDOOR FAN MOTOR 12.5 TONS

V–Ph–Hz	VOLTAGE RANGE		COMP (Cir 1)		COMP (Cir 2)		OFM (ea)		IFM		
	MIN	MAX	RLA	LRA	RLA	LRA	WATTS	FLA	TYPE	EFF at Full Load	FLA
208–3–60	187	253	19.0	123	19.0	123	1288	1.5	STD	81%	7.5
									MED	81%	10.0
									HIGH–High eff	89.5%	20.4
230–3–60	187	253	19.0	123	19.0	123	1288	1.5	STD	81%	7.5
									MED	81%	10.0
									HIGH–High eff	89.5%	20.4
460–3–60	414	506	9.7	62	9.7	62	1288	0.8	STD	81%	3.4
									MED	81%	4.4
									HIGH–High eff	89.5%	10.2
575–3–60	518	633	7.4	50	7.4	50	1288	0.7	STD	81%	2.8
									MED	81%	2.8
									HIGH–High eff	89.5%	9.0

ELECTRICAL INFORMATION
(UNITS PRODUCED PRIOR TO JULY 30, 2012)

TABLE 86 – RGH090 **2–STAGE COOLING WITH 2–SPEED INDOOR FAN MOTOR**

V–Ph–Hz	VOLTAGE RANGE		COMP 1		COMP 2		OFM (ea)		IFM		
	MIN	MAX	RLA	LRA	RLA	LRA	WATTS	FLA	TYPE	EFF at Full Load	FLA
208–3–60	187	253	13.6	83	13.6	83	325	1.5	STD	84%	5.8
							325	1.5	MED	77%	7.1
							325	1.5	HIGH	82%	10.8
230–3–60	187	253	13.6	83	13.6	83	325	1.5	STD	84%	5.6
							325	1.5	MED	77%	6.8
							325	1.5	HIGH	82%	9.8
460–3–60	414	506	6.1	41	6.1	41	325	0.8	STD	79%	2.9
							325	0.8	MED	77%	3.8
							325	0.8	HIGH	82%	4.9
575–3–60	518	633	4.2	33	4.2	33	325	0.6	STD	81%	2.8
							325	0.6	MED	80%	3.5
							325	0.6	HIGH	84%	4.5

TABLE 87 – RGH102 **2–STAGE COOLING WITH 2–SPEED INDOOR FAN MOTOR**

V–Ph–Hz	VOLTAGE RANGE		COMP 1		COMP 2		OFM (ea)		IFM		
	MIN	MAX	RLA	LRA	RLA	LRA	WATTS	FLA	TYPE	EFF at Full Load	FLA
208–3–60	187	253	13.7	83	13.7	83	325	1.5	STD	84%	5.8
							325	1.5	MED	77%	7.1
							325	1.5	HIGH	82%	10.8
230–3–60	187	253	13.7	83	13.7	83	325	1.5	STD	84%	5.6
							325	1.5	MED	77%	6.8
							325	1.5	HIGH	82%	9.8
460–3–60	414	506	6.2	41	6.2	41	325	0.8	STD	79%	2.9
							325	0.8	MED	77%	3.8
							325	0.8	HIGH	82%	4.9
575–3–60	518	633	4.8	33	4.8	33	325	0.6	STD	81%	2.8
							325	0.6	MED	80%	3.5
							325	0.6	HIGH	84%	4.5

TABLE 88 – RGH110 **2–STAGE COOLING WITH 2–SPEED INDOOR FAN MOTOR**

V–Ph–Hz	VOLTAGE RANGE		COMP 1		COMP 2		OFM (ea)		IFM		
	MIN	MAX	RLA	LRA	RLA	LRA	WATTS	FLA	TYPE	EFF at Full Load	FLA
208-3-60	187	253	15.9	110	15.9	110	610	7.4	STD	77%	7.1
							610	7.4	MED	82%	10.8
							610	7.4	HIGH	84%	13.6
230-3-60	187	253	15.9	110	15.9	110	610	7.4	STD	77%	6.8
							610	7.4	MED	82%	9.8
							610	7.4	HIGH	84%	12.7
460-3-60	414	506	7.0	52	7.0	52	610	3.6	STD	77%	3.8
							610	3.6	MED	82%	4.9
							610	3.6	HIGH	84%	6.4
575-3-60	518	633	5.1	40	5.1	40	610	3.6	STD	80%	3.5
							610	3.6	MED	84%	4.5
							610	3.6	HIGH	83%	6.2

ELECTRICAL INFORMATION
(UNITS PRODUCED PRIOR TO JULY 30, 2012)

TABLE 89 – RGH120 **2–STAGE COOLING WITH 2–SPEED INDOOR FAN MOTOR**

V–Ph–Hz	VOLTAGE RANGE		COMP 1		COMP 2		OFM (ea)		IFM		
	MIN	MAX	RLA	LRA	RLA	LRA	WATTS	FLA	TYPE	EFF at Full Load	FLA
208–3–60	187	253	15.9	110	15.9	110	1070	6.2	STD	77%	7.1
							1070	6.2	MED	82%	10.8
							1070	6.2	HIGH	84%	13.6
230–3–60	187	253	15.9	110	15.9	110	1070	6.2	STD	77%	6.8
							1070	6.2	MED	82%	9.8
							1070	6.2	HIGH	84%	12.7
460–3–60	414	506	7.7	52	7.7	52	1070	3.1	STD	77%	3.8
							1070	3.1	MED	82%	4.9
							1070	3.1	HIGH	84%	6.4
575–3–60	518	633	5.7	39	5.7	39	1070	2.5	STD	80%	3.5
							1070	2.5	MED	84%	4.5
							1070	2.5	HIGH	83%	6.2

TABLE 90 – RGH150 **2–STAGE COOLING WITH 2–SPEED INDOOR FAN MOTOR**

V–Ph–Hz	VOLTAGE RANGE		COMP 1		COMP 2		OFM (ea)		IFM		
	MIN	MAX	RLA	LRA	RLA	LRA	WATTS	FLA	TYPE	EFF at Full Load	FLA
208–3–60	187	253	19.0	123	19.0	123	280	1.5	STD	85%	8.6
							280	1.5	MED	82%	10.8
							280	1.5	HIGH	90%	20.4
230–3–60	187	253	19.0	123	19.0	123	280	1.5	STD	85%	7.8
							280	1.5	MED	82%	9.8
							280	1.5	HIGH	90%	20.4
460–3–60	414	506	9.7	62	9.7	62	280	0.8	STD	85%	3.8
							280	0.8	MED	82%	4.9
							280	0.8	HIGH	90%	10.2
575–3–60	518	633	7.4	50	7.4	50	280	0.7	STD	84%	4.5
							280	0.7	MED	84%	4.5
							280	0.7	HIGH	94%	9.0

ELECTRICAL INFORMATION
(UNITS PRODUCED PRIOR TO JULY 30, 2012)

TABLE 91 – UNIT WIRE/FUSE OR HACR BREAKER SIZING DATA

UNIT	NOM. V–Ph–Hz	IFM TYPE	NO C.O. or UNPWR C.O.							
			NO P.E.				w/ P.E. (pwrd fr/ unit)			
			MCA	MAX FUSE or HACR BRKR	DISC. SIZE		MCA	MAX FUSE or HACR BRKR	DISC. SIZE	
					FLA	LRA			FLA	LRA
RGH036	208/230–1–60	DD–STD	30	45	29	88	32	45	31	90
		BD–STD†	27	40	26	93	29	45	28	95
		MED†	27	40	26	93	29	45	28	95
	208/230–3–60	DD–STD	22	30	22	82	24	30	24	84
		BD–STD†	19	25	19	87	21	30	21	89
		MED	19	25	19	87	21	30	21	89
		HIGH	20	25	19	105	22	30	21	107
	460–3–60	DD–STD	12	15	12	43	13	15	13	44
		BD–STD†	10	15	10	45	11	15	11	46
		MED	10	15	10	45	11	15	11	46
		HIGH	11	15	10	54	12	15	11	55
	575–3–60	DD–STD	10	15	10	42	12	15	12	44
		BD–STD†	8	15	7	43	10	15	9	45
		MED	8	15	7	43	10	15	9	45
		HIGH	8	15	7	49	10	15	9	51
RGH048	208/230–1–60	DD–STD	37	50	35	127	38	50	37	129
		BD–STD†	34	50	32	132	36	50	35	134
		MED†	34	50	32	132	36	50	35	134
	208/230–3–60	DD–STD	26	30	26	93	28	40	28	95
		BD–STD†	24	30	23	98	26	30	25	100
		MED	24	30	23	105	26	30	26	107
		HIGH	26	30	26	142	28	40	28	144
	460–3–60	DD–STD	13	15	13	47	14	20	14	48
		BD–STD†	11	15	11	49	12	15	12	50
		MED	12	15	11	52	13	15	12	53
		HIGH	13	15	12	71	14	15	13	72
	575–3–60	DD–STD	11	15	11	39	13	15	13	41
		BD–STD†	9	15	9	40	11	15	11	42
		MED	9	15	8	42	11	15	11	44
		HIGH	10	15	10	57	12	15	12	59

† Drive package is only available on Hot Gas Reheat equipped units

ELECTRICAL INFORMATION
(UNITS PRODUCED PRIOR TO JULY 30, 2012)

Table 91 – UNIT WIRE/FUSE OR HACR BREAKER SIZING DATA (cont)

UNIT	NOM. V–Ph–Hz	IFM TYPE	NO C.O. or UNPWR C.O.							
			NO P.E.				w/ P.E. (pwrd fr/ unit)			
			MCA	MAX FUSE or HACR BRKR	DISC. SIZE		MCA	MAX FUSE or HACR BRKR	DISC. SIZE	
					FLA	LRA			FLA	LRA
RGH060	208/230–1–60	DD–STD	41	60	39	144	42	60	41	146
		BD–STD†	38	60	36	149	40	60	38	151
		MED†	40	60	38	174	42	60	41	176
	208/230–3–60	DD–STD	29	40	28	120	31	45	31	122
		BD–STD†	27	40	26	125	29	40	28	127
		MED	27	40	26	143	29	40	28	145
		HIGH	29	40	29	169	31	45	31	171
	460–3–60	DD–STD	14	20	14	58	15	20	15	59
		BD–STD†	12	15	12	60	13	15	13	61
		MED	13	15	12	69	14	20	13	70
		HIGH	14	20	13	82	15	20	14	83
	575–3–60	DD–STD	12	15	12	46	14	15	14	48
		BD–STD†	10	15	9	47	12	15	11	49
		MED	10	15	9	53	12	15	11	55
		HIGH	11	15	10	64	12	15	12	66
RGH072	208/230–3–60	STD	32	50	31	148	36	50	36	152
		MED	35	50	34	185	39	50	38	189
		HIGH	42	60	43	211	46	60	47	215
	460–3–60	STD	17	25	16	75	19	25	18	77
		MED	18	25	17	94	19	25	19	96
		HIGH	22	30	22	107	23	30	24	109
	575–3–60	STD	12	15	11	61	16	20	16	65
		MED	14	20	13	76	18	20	17	80
		HIGH	17	20	16	90	20	25	21	94
RGH090	208/230–3–60	STD	39	50	41	191	43	50	45	195
		MED	39	50	41	202	43	50	45	206
		HIGH	44	50	46	245	48	60	51	249
	460–3–60	STD	18	20	19	95	20	25	21	97
		MED	18	20	19	101	20	25	21	103
		HIGH	20	25	21	123	22	25	23	125
	575–3–60	STD	12	15	12	77	16	20	17	81
		MED	13	15	13	81	17	20	18	85
		HIGH	14	15	14	92	18	20	19	96
RGH102	208/230–3–60	STD	39	50	41	191	43	50	45	195
		MED	39	50	41	202	43	50	45	206
		HIGH	44	50	46	245	48	60	51	249
	460–3–60	STD	19	20	19	95	20	25	21	97
		MED	19	20	19	101	20	25	21	103
		HIGH	20	25	21	123	22	25	23	125
	575–3–60	STD	14	15	14	77	17	20	18	81
		MED	14	20	15	81	18	20	19	85
		HIGH	15	20	16	92	19	20	20	96

† Drive package is only available on Hot Gas Reheat equipped units

Table 92 – UNIT WIRE/FUSE OR HACR BREAKER SIZING DATA (cont)

UNIT	NOM. V–Ph–Hz	IFM TYPE	NO C.O. or UNPWR C.O.							
			NO P.E.				w/ P.E. (pwrd fr/ unit)			
			MCA	MAX FUSE or HACR BRKR	DISC. SIZE		MCA	MAX FUSE or HACR BRKR	DISC. SIZE	
					FLA	LRA			FLA	LRA
RGH110	208/230–3–60	STD	49	60	51	257	53	60	55	261
		MED	54	60	57	300	57	70	61	304
		HIGH	59	70	62	309	62	70	67	313
	460–3–60	STD	22	25	23	123	24	30	25	125
		MED	24	30	25	145	26	30	27	147
		HIGH	27	30	29	149	29	35	31	151
	575–3–60	STD	18	20	18	95	21	25	23	99
		MED	18	20	19	106	22	25	23	110
		HIGH	21	25	22	120	25	30	27	124
RGH120	208/230–3–60	STD	48	60	50	282	51	60	54	286
		MED	52	60	55	325	56	60	60	329
		HIGH	57	70	61	334	61	70	65	338
	460–3–60	STD	23	30	24	135	25	30	26	137
		MED	25	30	26	157	27	30	28	159
		HIGH	28	30	30	161	30	35	32	163
	575–3–60	STD	18	20	18	105	22	25	23	109
		MED	19	20	19	116	22	25	24	120
		HIGH	21	25	22	130	25	30	27	134
RGH150	208/230–3–60	STD	55	60	58	314	59	70	62	318
		MED	58	70	60	331	62	80	65	335
		HIGH	68	80	72	350	72	80	77	354
	460–3–60	STD	28	35	29	158	30	35	31	160
		MED	29	35	30	167	31	40	32	169
		HIGH	35	40	37	176	37	45	39	178
	575–3–60	STD	22	25	23	128	26	30	27	132
		MED	22	25	23	128	26	30	27	132
		HIGH	29	35	30	140	32	40	34	144

ELECTRICAL INFORMATION
(UNITS PRODUCED PRIOR TO JULY 30, 2012)

LEGEND:

BRKR	–	Circuit breaker
CO	–	Convenience outlet
DISC	–	Disconnect
FLA	–	Full load amps
IFM	–	Indoor fan motor
LRA	–	Locked rotor amps
MCA	–	Minimum circuit amps
MOCP	–	MAX FUSE or HACR Breaker
PE	–	Power exhaust
UNPWR CO	–	Unpowered convenient outlet

NOTES:

In compliance with NEC requirements for multimotor and combination load equipment (refer to NEC Articles 430 and 440), the overcurrent protective device for the unit shall be fuse or HACR breaker. Canadian units may be fuse or circuit breaker.

Unbalanced 3-Phase Supply Voltage

Never operate a motor where a phase imbalance in supply voltage is greater than 2%. Use the following formula to determine the percentage of voltage imbalance.

$$\text{\% Voltage Imbalance} = 100 \times \frac{\text{max voltage deviation from average voltage}}{\text{average voltage}}$$

Example: Supply voltage is 230-3-60

AB = 224 v
BC = 231 v
AC = 226 v

$$\text{Average Voltage} = \frac{(224 + 231 + 226)}{3} = \frac{681}{3} = 227$$

Determine maximum deviation from average voltage.

(AB) 227 – 224 = 3 v
(BC) 231 – 227 = 4 v
(AC) 227 – 226 = 1 v

Maximum deviation is 4 v.

Determine percent of voltage imbalance.

$$\text{\% Voltage Imbalance} = 100 \times \frac{4}{227} = 1.76\%$$

This amount of phase imbalance is satisfactory as it is below the maximum allowable 2%.

IMPORTANT: If the supply voltage phase imbalance is more than 2%, contact your local electric utility company immediately.

SEQUENCE OF OPERATION

General

The sequence below describes the sequence of operation for an electro−mechanical unit with and without a factory installed economizer IV and X. For information regarding a direct digital controller, see the start−up, operations, and troubleshooting manual for the applicable controller.

Electro−mechanical units with no economizer

Cooling —

When the thermostat calls for cooling, terminals G and Y1 are energized. As a result, the indoor−fan contactor (IFC) and the compressor contactor (C1) are energized, causing the indoor−an motor (IFM), compressor #1, and outdoor fan to start. If the unit has 2 stages of cooling, the thermostat will additionally energize Y2. The Y2 signal will energize compressor contactor #2 (C2), causing compressor #2 to start. Regardless of the number of stages, the outdoor−fan motor runs continuously while unit is cooling.

Cooling (2−speed indoor fan motor) —

Per ASHRAE 90.1 2010 standard section 6.4.3.10.b, during the first stage of cooling operation the VFD will adjust the fan motor to provide 2/3rd of the total cfm established for the unit. When a call for the second stage of cooling is required, the VFD will allow the total cfm for the unit established (100%).

Heating

NOTE: Units have either 1 or 2 stages of gas heat.

When the thermostat calls for heating, power is sent to W on the Integrated Gas Controller (IGC) board. An LED (light−emitting diode) on the IGC board turns on and remains on during normal operation. A check is made to ensure that the rollout switch and limit switch are closed. If the check was successful, the induced−draft motor is energized, and when its speed is satisfactory, as proven by the “hall effect” sensor, the ignition activation period begins. The burners will ignite within 5 seconds. If the burners do not light, there is a 22−second delay before another 5−second attempt. This sequence is repeated for 15 minutes or until the burners light. If, after the 15 minutes, the burners still have not lit, heating is locked out. To reset the control, break 24−v power to the thermostat.

When ignition occurs, the IGC board will continue to monitor the condition of the rollout switch, the limit switches, the “hall effect” sensor, as well as the flame sensor. 45 seconds after ignition occurs, assuming the unit is controlled through a room thermostat set for fan auto, the indoor−fan motor will energize (and the outdoor−air dampers will open to their minimum position). If, for some reason, the over−temperature limit opens prior to the start of the indoor fan blower, the unit will shorten the 45−second delay to 5 seconds less than the time from initiation of heat to when the limit tripped. Gas will not be interrupted to the burners and heating will continue. Once the fan−on delay has been modified, it will not change back to 45 seconds until power is reset to the control.

On units with 2 stages of heat, when additional heat is required, W2 closes and initiates power to the second stage of the main gas valve. When the thermostat is satisfied, W1 and W2 open and the gas valve closes, interrupting the flow of gas to the main burners.

If the call for W1 lasted less than 1 minute, the heating cycle will not terminate until 1 minute after W1 became active. If the unit is controlled through a room thermostat set for fan auto, the indoor−fan motor will continue to operate for an additional 45 seconds then stop. If the over−temperature limit opens after the indoor motor is stopped, but within 10 minutes of W1 becoming inactive, on the next cycle the time will be extended by 15 seconds. The maximum delay is 3 minutes. Once modified, the fan off delay will not change back to 45 seconds unless power is reset to the control. A LED indicator is provided on the IGC to monitor operation.

Electro−mechanical units with an economizer

Cooling —

When free cooling is not available, the compressors will be controlled by the zone thermostat. When free cooling is available, the outdoor−air damper is modulated by the economizer IV and X control to provide a 50°F (10°C) to 55°F (13°C) mixed−air temperature into the zone. As the mixed air temperature fluctuates above 55°F (13°C)or below 50°F (10°C) dampers will be modulated (open or close) to bring the mixed−air temperature back within control. If mechanical cooling is utilized with free cooling, the outdoor−air damper will maintain its current position at the time the compressor is started. If the increase in cooling capacity causes the mixed−air temperature to drop below 45°F (7°C), then the outdoor−air damper position will be decreased to the minimum position. If the mixed−air temperature continues to fall, the outdoor−air damper will close. Control returns to normal once the mixed−air temperature rises above 48°F (9°C). The power exhaust fans will be energized and de−energized, if installed, as the outdoor−air damper opens and closes.

If field−installed accessory CO_2 sensors are connected to the economizer IV and X control, a demand controlled ventilation strategy will begin to operate. As the CO_2 level in the zone increases above the CO_2 setpoint, the minimum position of the damper will be increased proportionally. As the CO_2 level decreases because of the increase in fresh air, the outdoor−air damper will be proportionally closed. For economizer IV and X operation, there must be a thermostat call for the fan (G). If the unit is occupied and the fan is on, the damper will operate at minimum position. Otherwise, the damper will be closed.

When the economizer IV and X control is in the occupied mode and a call for cooling exists (Y1 on the thermostat), the control will first check for indoor fan operation. If the fan is not on, then cooling will not be activated. If the fan is on, then the control will open the economizer IV and X damper to the minimum position.

On the initial power to the economizer IV and X control, it will take the damper up to 2 1/2 minutes before it begins to position itself. After the initial power−up, further changes in damper position can take up to 30 seconds to initiate. Damper movement from full closed to full open (or vice versa) will take between 1 1/2 and 2 1/2 minutes. If free cooling can be used as determined from the appropriate changeover command (switch, dry bulb, enthalpy curve, differential dry bulb, or differential enthalpy), then the control will modulate the dampers open to maintain the mixed−air temperature setpoint at 50°F (10°C) to 55°F (13°C). If there is a further demand for cooling (cooling second stage − Y2 is energized), then the control will bring on compressor stage 1 to maintain the mixed−air temperature setpoint. The economizer IV and X damper will be open at maximum position. economizer IV and X operation is limited to a single compressor.

2−Speed Note: When operating in ventilation mode only, the indoor fan motor will automatically adjust to 2/3rd of the total cfm established.

Heating

The sequence of operation for the heating is the same as an electromechanical unit with no economizer. The only difference is how the economizer acts. The economizer will stay at the Economizer Minimum Position while the evaporator fan is operating. The outdoor−air damper is closed when the indoor fan is not operating.

Optional Hot Gas Reheat Dehumidification System

Units with the factory equipped Hot Gas Reheat option are capable of providing multiple modes of improved dehumidification as a variation of the normal cooling cycle. The Hot Gas Reheat option includes additional valves in the liquid line and discharge line of each refrigerant circuit, a small reheat condenser coil downstream of the evaporator, and Motormaster variable−speed control of some or all outdoor fans. Operation of the revised refrigerant circuit for each mode is described below.

The Hot Gas Reheat system provides three sub−modes of operation: Cool, Reheat1, and Reheat2.

Cool mode − provides a normal ratio of Sensible and Latent Cooling effect from the evaporator coil.

Reheat1 − provides increased Latent Cooling while slightly reducing the Sensible Cooling effect.

Reheat2 − provides normal Latent Cooling but with null or minimum Sensible Cooling effect delivered to the space.

The Reheat1 and Reheat2 modes are available when the unit is not in a Heating mode and when the Low Ambient Lockout switch is closed.

The following diagrams depict piping for Single Stage cooling units.

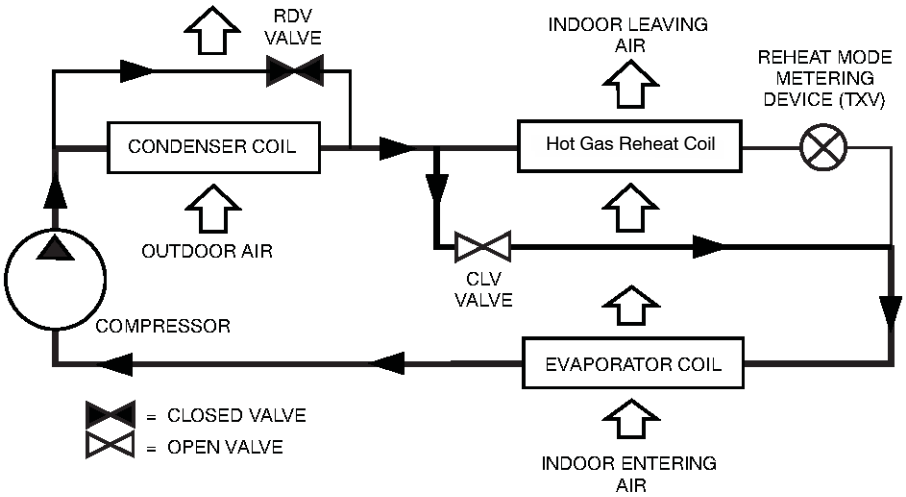

Normal Cooling Mode – Hot Gas Reheat with Single Stage Cooling

C12702

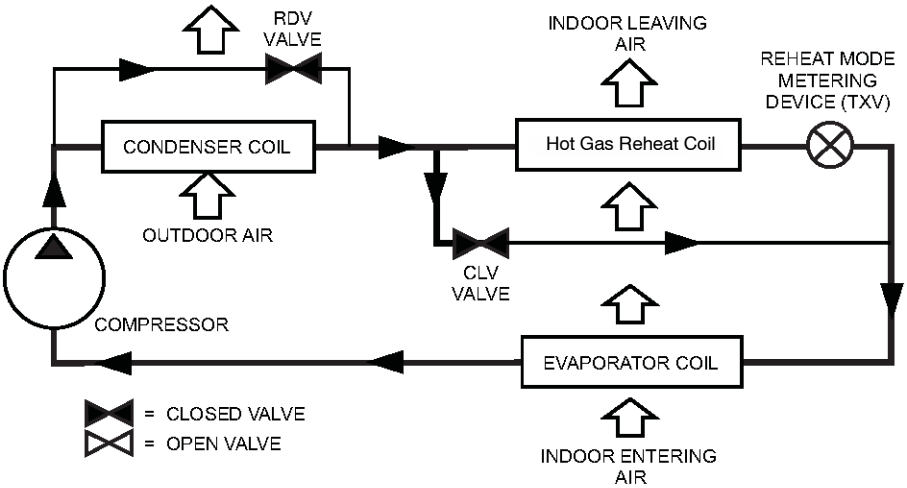

Subcooling Mode (Reheat 1) – Hot Gas Reheat System with Single Stage Cooling

C12703

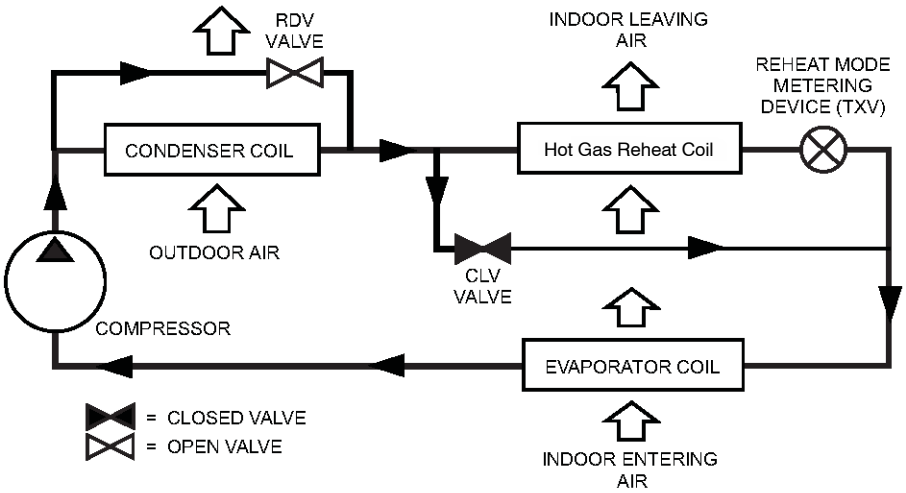

Hot Gas Reheat Mode (Reheat2) – Hot Gas Reheat with Single Stage Cooling

C12704

Gas Heat/Electric Cooling Packaged Rooftop

HVAC Guide Specifications

Size Range: **3 to 12.5 Nominal Tons**

As an Energy Star® Partner, International Comfort Products has determined that this product meets the ENERGY STAR® guidelines for energy efficiency.

Section **Description**

23 06 80 Schedules for Decentralized HVAC Equipment

23 06 80.13 Decentralized Unitary HVAC Equipment Schedule

23 06 80.13.A. Rooftop unit schedule

1. Schedule is per the project specification requirements.

23 07 16 HVAC Equipment Insulation

23 07 16.13 Decentralized, Rooftop Units:

23 07 16.13.A. Evaporator fan compartment:

1. Interior cabinet surfaces shall be insulated with a minimum 1/2–in. thick, minimum 1 1/2 lb density, flexible fiberglass insulation bonded with a phenolic binder, neoprene coated on the air side.
2. Insulation and adhesive shall meet NFPA 90A requirements for flame spread and smoke generation.

23 07 16.13.B. Gas heat compartment:

1. Aluminum foil–faced fiberglass insulation shall be used.
2. Insulation and adhesive shall meet NFPA 90A requirements for flame spread and smoke generation.

23 09 13 Instrumentation and Control Devices for HVAC

23 09 13.23 Sensors and Transmitters

23 09 13.23.A. Thermostats

1. Thermostat must
   a. energize both “W” and “G” when calling for heat.
   b. have capability to energize 2 different stages of cooling, and 2 different stages of heating.
   c. include capability for occupancy scheduling.

23 09 23 Direct–digital Control system for HVAC

23 09 23.13

23 09 23.13.A.

23 09 33 Electric and Electronic Control System for HVAC

23 09 33.13 Decentralized, Rooftop Units:

23 09 33.13.A. General:

1. Shall be complete with self–contained low–voltage control circuit protected by a resettable circuit breaker on the 24–v transformer side. Transformer shall have 75VA capability.
2. Shall utilize color–coded wiring.
3. Shall include a central control terminal board to conveniently and safely provide connection points for vital control functions such as: smoke detectors, phase monitor, gas controller, economizer, thermostat, DDC control options, and low and high pressure switches.
4. The heat exchanger shall be controlled by an integrated gas controller (IGC) microprocessor. See heat exchanger section of this specification.
5. Unit shall include a minimum of one 8–pin screw terminal connection board for connection of control wiring.

23 09 33.23.B. Safeties:

1. Compressor over–temperature, over–current. High internal pressure differential.
2. Low–pressure switch.
   a. Units with 2 compressors shall have different sized connectors for the circuit 1 and circuit 2 low and high pressure switches. They shall physically prevent the cross–wiring of the safety switches between circuits 1 and 2.

b. Low pressure switch shall use different color wire than the high pressure switch. The purpose is to assist the installer and service technician to correctly wire and or troubleshoot the rooftop unit.

3. High−pressure switch.
   a. Units with 2 compressors shall have different sized connectors for the circuit 1 and circuit 2 low and high pressure switches. They shall physically prevent the cross−wiring of the safety switches between circuits 1 and 2.
   b. High pressure switch shall use different color wire than the low pressure switch. The purpose is to assist the installer and service technician to correctly wire and or troubleshoot the rooftop unit.
4. Automatic reset, motor thermal overload protector.
5. Heating section shall be provided with the following minimum protections:
   a. High−temperature limit switches.
   b. Induced draft motor speed sensor.
   c. Flame rollout switch.
   d. Flame proving controls.

23 09 93 Sequence of Operations for HVAC Controls

23 09 93.13 Decentralized, Rooftop Units:

23 09 93.13 INSERT SEQUENCE OF OPERATION

23 40 13 Panel Air Filters

23 40 13.13 Decentralized, Rooftop Units:

23 40 13.13.A. Standard filter section

1. Shall consist of factory−installed, low velocity, disposable 2−in. thick fiberglass filters of commercially available sizes.
2. Unit shall use only one filter size. Multiple sizes are not acceptable.
3. Filters shall be accessible through an access panel with “no−tool” removal as described in the unit cabinet section of this specification (23 81 19.13.H).

23 81 19 Self−Contained Air Conditioners

23 81 19.13 Small−Capacity Self−Contained Air Conditioners RGH036−150

23 81 19.13.A. General

1. Outdoor, rooftop mounted, electrically controlled, heating and cooling unit utilizing a fully hermetic scroll compressor(s) for cooling duty and gas combustion for heating duty.
2. Factory assembled, single−piece heating and cooling rooftop unit. Contained within the unit enclosure shall be all factory wiring, piping, controls, and special features required prior to field start−up.
3. Unit shall use environmentally sound, R−410A refrigerant.
4. Unit shall be installed in accordance with the manufacturer’s instructions.
5. Unit must be selected and installed in compliance with local, state, and federal codes.

23 81 19.13.B. Quality Assurance

1. Unit meets ASHRAE 90.1−2007 minimum efficiency requirements.
2. 3 phase units are Energy Star certified.
3. Unit shall be rated in accordance with AHRI Standards 210/240 and 340/360.
4. Unit shall be designed to conform to ASHRAE 15, 2001.
5. Unit shall be UL−tested and certified in accordance with ANSI Z21.47 Standards and UL−listed and certified under Canadian standards as a total package for safety requirements.
6. Insulation and adhesive shall meet NFPA 90A requirements for flame spread and smoke generation.
7. Unit casing shall be capable of withstanding 500−hour salt spray exposure per ASTM B117 (scribed specimen).
8. Unit casing shall be capable of withstanding Federal Test Method Standard No. 141 (Method 6061) 5000−hour salt spray.
9. Unit shall be designed in accordance with ISO 9001:2008, and shall be manufactured in a facility registered by ISO 9001:2008.
10. Roof curb shall be designed to conform to NRCA Standards.
11. Unit shall be subjected to a completely automated run test on the assembly line. The data for each unit will be stored at the factory, and must be available upon request.
12. Unit shall be designed in accordance with UL Standard 1995, including tested to withstand rain.
13. Unit shall be constructed to prevent intrusion of snow and tested to prevent snow intrusion into the control box up to 40 mph.
14. Unit shake tested to assurance level 1, ASTM D4169 to ensure shipping reliability.

23 81 19.13.C. Delivery, Storage, and Handling

1. Unit shall be stored and handled per manufacturer’s recommendations.
2. Lifted by crane requires either shipping top panel or spreader bars.
3. Unit shall only be stored or positioned in the upright position.

23 81 19.13.E. Project Conditions

1. As specified in the contract.

23 81 19.13.F. Operating Characteristics

1. Unit shall be capable of starting and running at 125°F (52°C) ambient outdoor temperature, meeting maximum load criteria of AHRI Standard 210/240 or 340/360 at ± 10% voltage.
2. Compressor with standard controls shall be capable of operation down to 35°F (2°C), ambient outdoor temperatures. Accessory low ambient kits shall be available if operation below 35°F (2°C), is required. See below for head pressure control package or winter start kit.
3. Unit shall discharge supply air vertically or horizontally as shown on contract drawings.
4. Unit shall be factory configured for vertical supply & return configurations.
5. Unit shall be field convertible from vertical to horizontal airflow on all models. No special kit required on 036–120 models. Supply duct kit required for 150 size model only.
6. Unit shall be capable of mixed operation: vertical supply with horizontal return or horizontal supply with vertical return.

23 81 19.13.G. Electrical Requirements

1. Main power supply voltage, phase, and frequency must match those required by the manufacturer.

23 81 19.13.H. Unit Cabinet

1. Unit cabinet shall be constructed of G90 galvanized steel, and shall be bonderized and coated with a pre–painted baked enamel finish on all externally exposed surfaces.
2. Unit cabinet exterior paint shall be: film thickness, (dry) 0.003 inches minimum, gloss (per ASTM D523, 60°F / 16°C): 60, Hardness: H–2H Pencil hardness.
3. Evaporator fan compartment interior cabinet insulation shall conform to AHRI Standards 210/240 or 340/360 minimum exterior sweat criteria. Interior surfaces shall be insulated with a minimum 1/2–in. thick, 1 lb density, flexible fiberglass insulation, neoprene coated on the air side. Aluminum foil–faced fiberglass insulation shall be used in the gas heat compartment.
4. Base of unit shall have a minimum of four locations for thru–the–base gas and electrical connections (factory installed or field installed), standard.
5. Base Rail
   a. Unit shall have base rails on a minimum of 4 sides.
   b. Holes shall be provided in the base rails for rigging shackles to facilitate maneuvering and overhead rigging.
   c. Holes shall be provided in the base rail for moving the rooftop by fork truck.
   d. Base rail shall be a minimum of 16 gauge thickness.
6. Condensate pan and connections:
   a. Shall be an internally sloped condensate drain pan made of a non–corrosive material.
   b. Shall comply with ASHRAE Standard 62.
   c. Shall use a 3/4" –14 NPT drain connection, possible either through the bottom or side of the drain pan. Connection shall be made per manufacturer's recommendations.
7. Top panel:
   a. Shall be a single piece top panel on 036 thru 120 sizes and 2 piece on 150 size.
8. Gas Connections:
   a. All gas piping connecting to unit gas valve shall enter the unit cabinet at a single location on side of unit (horizontal plane).
   b. Thru–the–base capability
      (1.) Standard unit shall have a thru–the–base gas–line location using a raised, embossed portion of the unit basepan.
      (2.) Optional, factory–approved, water–tight connection method must be used for thru–the–base gas connections.
      (3.) No basepan penetration, other than those authorized by the manufacturer, is permitted.
9. Electrical Connections
   a. All unit power wiring shall enter unit cabinet at a single, factory–prepared, knockout location.
   b. Thru–the–base capability.
      (1.) Standard unit shall have a thru–the–base electrical location(s) using a raised, embossed portion of the unit basepan.
      (2.) Optional, factory–approved, water–tight connection method must be used for thru–the–base electrical connections.
      (3.) No basepan penetration, other than those authorized by the manufacturer, is permitted.
10. Component access panels (standard)
   a. Cabinet panels shall be easily removable for servicing.
   b. Unit shall have one factory installed, tool–less, removable, filter access panel.
   c. Panels covering control box, indoor fan, indoor fan motor, gas components (where applicable), and compressors shall have a molded composite handles.
   d. Handles shall be UV modified, composite. They shall be permanently attached, and recessed into the panel.
   e. Screws on the vertical portion of all removable access panel shall engage into heat resistant, molded composite collars.
   f. Collars shall be removable and easily replaceable using manufacturer recommended parts.

23 81 19.13.I. Gas Heat

1. General
   a. Heat exchanger shall be an induced draft design. Positive pressure heat exchanger designs shall not be allowed.
   b. Shall incorporate a direct–spark ignition system and redundant main gas valve.
   c. Gas supply pressure at the inlet to the rooftop unit gas valve must match that required by the manufacturer.
2. The heat exchanger shall be controlled by an integrated gas controller (IGC) microprocessor.

a. IGC board shall notify users of fault using an LED (light−emitting diode).
b. The LED shall be visible without removing the control box access panel.
c. IGC board shall contain algorithms that modify evaporator−fan operation to prevent future cycling on high temperature limit switch.
d. Unit shall be equipped with anti−cycle protection with one short cycle on unit flame rollout switch or 4 continuous short cycles on the high temperature limit switch. Fault indication shall be made using an LED.

3. Standard Heat Exchanger construction
   a. Heat exchanger shall be of the tubular−section type constructed of a minimum of 20−gauge steel coated with a nominal 1.2 mil aluminum−silicone alloy for corrosion resistance.
   b. Burners shall be of the in−shot type constructed of aluminum−coated steel.
   c. Burners shall incorporate orifices for rated heat output up to 2000 ft (610m) elevation. Additional accessory kits may be required for applications above 2000 ft (610m) elevation, depending on local gas supply conditions.
   d. Each heat exchanger tube shall contain multiple dimples for increased heating effectiveness.
4. Optional Stainless Steel Heat Exchanger construction
   a. Use energy saving, direct−spark ignition system.
   b. Use a redundant main gas valve.
   c. Burners shall be of the in−shot type constructed of aluminum−coated steel.
   d. All gas piping shall enter the unit cabinet at a single location on side of unit (horizontal plane).
   e. The optional stainless steel heat exchanger shall be of the tubular−section type, constructed of a minimum of 20−gauge type 409 stainless steel.
   f. Type 409 stainless steel shall be used in heat exchanger tubes and vestibule plate.
   g. Complete stainless steel heat exchanger allows for greater application flexibility.
5. Optional Low NO_x Heat Exchanger construction
   a. Low NO_x reduction shall be provided to reduce nitrous oxide emissions to meet California's Air Quality Management District (SCAQMD) low−NO_x emissions requirement of 40 nanograms per joule or less.
   b. Primary tubes and vestibule plates on low NO_x units shall be 409 stainless steel. Other components shall be aluminized steel.
6. Induced draft combustion motor and blower
   a. Shall be a direct−drive, single inlet, forward−curved centrifugal type.
   b. Shall be made from steel with a corrosion−resistant finish.
   c. Shall have permanently lubricated sealed bearings.
   d. Shall have inherent thermal overload protection.
   e. Shall have an automatic reset feature.

23 81 19.13.J. Coils

1. Standard Aluminum Fin/Copper Tube Coils:
   a. Standard evaporator and condenser coils shall have aluminum lanced plate fins mechanically bonded to seamless internally grooved copper tubes with all joints brazed.
   b. Evaporator coils shall be leak tested to 150 psig, pressure tested to 450 psig, and qualified to UL 1995 burst test at 1775 psig.
   c. Condenser coils shall be leak tested to 150 psig, pressure tested to 650 psig, and qualified to UL 1995 burst test at 1980 psig.
2. Optional Pre−coated aluminum−fin condenser coils:
   a. Shall have a durable epoxy−phenolic coating to provide protection in mildly corrosive coastal environments.
   b. Coating shall be applied to the aluminum fin stock prior to the fin stamping process to create an inert barrier between the aluminum fin and copper tube.
   c. Epoxy−phenolic barrier shall minimize galvanic action between dissimilar metals.
3. Optional Copper−fin evaporator and condenser coils:
   a. Shall be constructed of copper fins mechanically bonded to copper tubes and copper tube sheets.
   b. Galvanized steel tube sheets shall not be acceptable.
   c. A polymer strip shall prevent coil assembly from contacting the sheet metal coil pan to minimize potential for galvanic corrosion between coil and pan.
4. Optional E−coated aluminum−fin evaporator and condenser coils:
   a. Shall have a flexible epoxy polymer coating uniformly applied to all coil surface areas without material bridging between fins.
   b. Coating process shall ensure complete coil encapsulation of tubes, fins and headers.
   c. Color shall be high gloss black with gloss per ASTM D523−89.
   d. Uniform dry film thickness from 0.8 to 1.2 mil on all surface areas including fin edges.
   e. Superior hardness characteristics of 2H per ASTM D3363−92A and cross−hatch adhesion of 4B−5B per ASTM D3359−93.
   f. Impact resistance shall be up to 160 in.−lb (ASTM D2794−93).

g. Humidity and water immersion resistance shall be up to minimum 1000 and 250 hours respectively (ASTM D2247−92 and ASTM D870−92).
h. Corrosion durability shall be confirmed through testing to be no less than 1000 hours salt spray per ASTM B117−90.

5. Optional E−coated aluminum−fin, aluminum tube condenser coils:
   a. Shall have a flexible epoxy polymer coating uniformly applied to all coil external surface areas without material bridging between fins or louvers.
   b. Coating process shall ensure complete coil encapsulation, including all exposed fin edges.
   c. E−coat thickness of 0.8 to 1.2 mil with top coat having a uniform dry film thickness from 1.0 to 2.0 mil on all external coil surface areas, including fin edges, shall be provided.
   d. Shall have superior hardness characteristics of 2H per ASTM D3363−00 and cross−hatch adhesion of 4B−5B per ASTM D3359−02.
   e. Shall have superior impact resistance with no cracking, chipping or peeling per NSF/ANSI 51−2002 Method 10.2.

23 81 19.13.K. Refrigerant Components

1. Refrigerant circuit shall include the following control, safety, and maintenance features:
   a. Thermostatic Expansion Valve (TXV) shall help provide optimum performance across the entire operating range. Shall contain removable power element to allow change out of power element and bulb without removing the valve body.
   b. Refrigerant filter drier − Solid core design.
   c. Service gauge connections on suction and discharge lines.
   d. Pressure gauge access through a specially designed access port in the top panel of the unit.
2. There shall be gauge line access port in the skin of the rooftop, covered by a black, removable plug.
   a. The plug shall be easy to remove and replace.
   b. When the plug is removed, the gauge access port shall enable maintenance personnel to route their pressure gauge lines.
   c. This gauge access port shall facilitate correct and accurate condenser pressure readings by enabling the reading with the compressor access panel on.
   d. The plug shall be made of a leak proof, UV−resistant, composite material.
3. Compressors
   a. Unit shall use fully hermetic, scroll compressor for each independent refrigeration circuit.
   b. Models shall be available with single compressor/single stage cooling designs on 036 − 072 sizes models, and 2 compressor/2 stage cooling models on 090 − 150 sizes.
   c. Compressor motors shall be cooled by refrigerant gas passing through motor windings.
   d. Compressors shall be internally protected from high discharge temperature conditions.
   e. Compressors shall be protected from an over−temperature and over−amperage conditions by an internal, motor overload device.
   f. Compressor shall be factory mounted on rubber grommets.
   g. Compressor motors shall have internal line break thermal, current overload and high pressure differential protection.
   h. Crankcase heaters shall not be required for normal operating range, unless provided by the factory.

23 81 19.13.L. Filter Section

1. Filters access is specified in the unit cabinet section of this specification.
2. Filters shall be held in place by a pivoting filter tray, facilitating easy removal and installation.
3. Shall consist of factory−installed, low velocity, throw−away 2−in. thick fiberglass filters.
4. Filters shall be standard, commercially available sizes.
5. Only one size filter per unit is allowed.

23 81 19.13.M. Evaporator Fan and Motor

1. Evaporator fan motor:
   a. Shall have permanently lubricated bearings.
   b. Shall have inherent automatic−reset thermal overload protection or circuit breaker.
   c. Shall have a maximum continuous bhp rating for continuous duty operation; no safety factors above that rating shall be required.
2. Electric Drive (Direct Drive) ECM − 5 Speed/Torque Evaporator Fan:
   a. Multi speed motor with easy quick adjustment settings.
   b. Blower fan shall be double−inlet type with forward−curved blades.
   c. Shall be constructed from steel with a corrosion resistant finish and dynamically balanced.
   d. Standard on all 036 − 060 models with 208/230/1/60 operation
   e. Standard on all 036 − 060 3−phase models, with optional belt drive.
3. Belt−driven Evaporator Fan:
   a. Belt drive shall include an adjustable−pitch motor pulley.
   b. Shall use sealed, permanently lubricated ball−bearing type.
   c. Blower fan shall be double−inlet type with forward−curved blades.
   d. Shall be constructed from steel with a corrosion resistant finish and dynamically balanced.

e. Standard on all 072−150 size models. Optional on all 036−060 3−phase models.

23 81 19.13.N. Condenser Fans and Motors

1. Condenser fan motors:
   a. Shall be a totally enclosed motor.
   b. Shall use permanently lubricated bearings.
   c. Shall have inherent thermal overload protection with an automatic reset feature.
   d. Shall use a shaft−down design on 036 to 150 models.
2. Condenser Fans:
   a. Shall be a direct−driven propeller type fan.
   b. Shall have aluminum blades riveted to corrosion−resistant steel spiders and shall be dynamically balanced.

23 81 19.13.O. Special Features Options and Accessories

1. 2 speed VFD Drive Motor System for 2−stage cooling models only:
   a. Evaporator fan motor:
      (1.) Shall have permanently lubricated bearings.
      (2.) Shall have a maximum continuous bhp rating for continuous duty operation; no safety factors above that rating.
      (3.) Shall be Variable Frequency duty and 2−speed control.
      (4.) Shall contain motor shaft grounding ring to prevent electrical bearing fluting damage by safely diverting harmful shaft voltages and bearing currents to ground.
2. Variable Frequency Drive (VFD). Only available on 2−speed indoor fan motor option):
   a. Shall be installed inside the unit cabinet, mounted, wired and tested.
   b. Shall contain Electromagnetic Interference (EMI) frequency protection.
   c. Insulated Gate Bi−Polar Transistors (IGBT) used to produce the output pulse width modulated (PWM) waveform, allowing for quiet motor operation.
   d. Self diagnostics with fault and power code LED indicator. Field accessory Display Kit available for further diagnostics and special setup applications.
   e. RS485 capability standard.
   f. Electronic thermal overload protection.
   g. 5% swinging chokes for harmonic reduction and improved power factor.
   h. All printed circuit boards shall be conformal coated.
3. Integrated Economizers:
   a. Integrated, gear−driven parallel modulating blade design type capable of simultaneous economizer and compressor operation.
   b. Independent modules for vertical or horizontal return configurations shall be available. Vertical return modules shall be available as a factory installed option.
   c. Damper blades shall be galvanized steel with composite gears. Plastic or composite blades on intake or return shall not be acceptable.
   d. Shall include all hardware and controls to provide free cooling with outdoor air when temperature and/or humidity are below setpoints.
   e. Shall be equipped with gear driven dampers for both the outdoor ventilation air and the return air for positive air stream control.
   f. Shall be equipped with low−leakage dampers, not to exceed 2% leakage at 1 in. wg pressure differential.
   g. Ultra low leak EconoMi$er X system shall be available on models with SAV 2−speed Variable Frequency Drive (VFD) systems. Only available on 2−speed indoor fan motor systems with electromechanical, ComfortLink or RTU Open controls.
   h. Shall be capable of introducing up to 100% outdoor air.
   i. Shall be equipped with a barometric relief damper capable of relieving up to 100% return air.
   j. Shall be designed to close damper(s) during loss−of−power situations with spring return built into motor.
   k. Dry bulb outdoor−air temperature sensor shall be provided as standard. Outdoor air sensor setpoint shall be adjustable and shall range from 40 to 100°F / 4 to 38°C. Additional sensor options shall be available as accessories.
   l. The economizer controller shall also provide control of an accessory power exhaust unit. function. Factory set at 100%, with a range of 0% to 100%.
   m. The economizer shall maintain minimum airflow into the building during occupied period and provide design ventilation rate for full occupancy. A remote potentiometer may be used to override the damper setpoint.
   n. Dampers shall be completely closed when the unit is in the unoccupied mode.
   o. Economizer controller shall accept a 2−10Vdc CO_2 sensor input for IAQ/DCV control. In this mode, dampers shall modulate the outdoor−air damper to provide ventilation based on the sensor input.
   p. Compressor lockout sensor shall open at 35°F (2°C) and close closes at 50°F (10°C).
   q. Actuator shall be direct coupled to economizer gear. No linkage arms or control rods shall be acceptable.
   r. Economizer controller shall provide indications when in free cooling mode, in the DCV mode, or the exhaust fan contact is closed.
4. Two−Position Damper

a. Damper shall be a Two−Position Damper. Damper travel shall be from the full closed position to the field adjustable %−open setpoint.
b. Damper shall include adjustable damper travel from 25% to 100% (full open).
c. Damper shall include single or dual blade, gear driven dampers and actuator motor.
d. Actuator shall be direct coupled to damper gear. No linkage arms or control rods shall be acceptable.
e. Damper will admit up to 100% outdoor air for applicable rooftop units.
f. Damper shall close upon indoor (evaporator) fan shutoff and/or loss of power.
g. The damper actuator shall plug into the rooftop unit's wiring harness plug. No hard wiring shall be required.
h. Outside air hood shall include aluminum water entrainment filter.

5. Manual damper
   a. Manual damper package shall consist of damper, air inlet screen, and rain hood which can be preset to admit up to 25 or 50% outdoor air for year round ventilation.
6. Hot Gas Reheat Adaptive Dehumidification System (3−phase models only):
   a. The Hot Gas Reheat Adaptive Dehumidification System shall be factory installed and shall provide greater dehumidification of the occupied space by two modes of dehumidification operations in addition to its normal design cooling mode:
      (1.) Subcooling mode further sub cools the hot liquid refrigerant leaving the condenser coil when both temperature and humidity in the space are not satisfied.
      (2.) Hot gas reheat mode shall mix a portion of the hot gas from the discharge of the compressor with the hot liquid refrigerant leaving the condenser coil to create a two−phase heat transfer in the system, resulting in a neutral leaving air temperature when only humidity in the space is not satisfied.
      (3.) Includes head pressure controller.
7. Head Pressure Control Package
   a. Controller shall control coil head pressure by condenser−fan speed modulation or condenser−fan cycling and wind baffles.
   b. Shall consist of solid−state control and condenser−coil temperature sensor to maintain condensing temperature between 90°F (32°C) and 110°F (43°C)at outdoor ambient temperatures down to −20°F (−29°C).
8. Propane Conversion Kit
   a. Package shall contain all the necessary hardware and instructions to convert a standard natural gas unit for use with liquefied propane, up to 2000 ft (610m) elevation.
   b. Additional accessory kits may be required for applications above 2000 ft (610m) elevation.
9. Flue Shield
   a. Flue shield shall provide protection from the hot sides of the gas flue hood.
10. Condenser Coil Hail Guard Assembly
    a. Shall protect against damage from hail.
    b. Shall be of louvered style.
11. Unit−Mounted, Non−Fused Disconnect Switch:
    a. Switch shall be factory−installed, internally mounted.
    b. National Electric Code (NEC) and UL approved non−fused switch shall provide unit power shutoff.
    c. Shall be accessible from outside the unit.
    d. Shall provide local shutdown and lockout capability.
12. Convenience Outlet:
    e. Non−Powered convenience outlet.
       (1.) Outlet shall be powered from a separate 115/120v power source.
       (2.) A transformer shall not be included.
       (3.) Outlet shall be factory−installed and internally mounted with easily accessible 115−v female receptacle.
       (4.) Outlet shall include 15 amp GFI receptacles with independent fuse protection.
       (5.) Outlet shall be accessible from outside the unit.
       (6.) Outlet shall include a field−installed "Wet in Use" cover.
13. Flue Discharge Deflector:
    a. Flue discharge deflector shall direct unit exhaust vertically instead of horizontally.
    b. Deflector shall be defined as a "natural draft" device by the National Fuel and Gas (NFG) code.
14. Thru−the−Base Connectors:
    a. Kits shall provide connectors to permit gas and electrical connections to be brought to the unit through the unit basepan.
    b. Minimum of four connection locations per unit.
15. Propeller Power Exhaust:
    a. Power exhaust shall be used in conjunction with an integrated economizer.
    b. Independent modules for vertical or horizontal return configurations shall be available.
    c. Horizontal power exhaust is shall be mounted in return ductwork.

d. Power exhaust shall be controlled by economizer controller operation. Exhaust fans shall be energized when dampers open past the 0−100% adjustable setpoint on the economizer control.

16. Roof Curbs (Vertical):
    a. Full perimeter roof curb with exhaust capability providing separate air streams for energy recovery from the exhaust air without supply air contamination.
    b. Formed galvanized steel with wood nailer strip and shall be capable of supporting entire unit weight.
    c. Permits installation and securing of ductwork to curb prior to mounting unit on the curb.
17. High Altitude Gas Conversion Kit:
    a. Package shall contain all the necessary hardware and instructions to convert a standard natural gas unit to operate from 2000−7000 ft (610 to 2134m) elevation with natural gas or from 0−7000 ft (90−2134m) elevation with liquefied propane.
18. Outdoor Air Enthalpy Sensor:
    a. The outdoor air enthalpy sensor shall be used to provide single enthalpy control. When used in conjunction with a return air enthalpy sensor, the unit will provide differential enthalpy control. The sensor allows the unit to determine if outside air is suitable for free cooling.
19. Return Air Enthalpy Sensor:
    a. The return air enthalpy sensor shall be used in conjunction with an outdoor air enthalpy sensor to provide differential enthalpy control.
20. Indoor Air Quality (CO_2) Sensor:
    a. Shall be able to provide demand ventilation indoor air quality (IAQ) control.
    b. The IAQ sensor shall be available in duct mount, wall mount, or wall mount with LED display. The setpoint shall have adjustment capability.
21. Smoke detectors (factory−installed only):
    a. Shall be a Four−Wire Controller and Detector.
    b. Shall be environmental compensated with differential sensing for reliable, stable, and drift−free sensitivity.
    c. Shall use magnet−activated test/reset sensor switches.
    d. Shall have tool−less connection terminal access.
    e. Shall have a recessed momentary switch for testing and resetting the detector.
    f. Controller shall include:
        (1.) One set of normally open alarm initiation contacts for connection to an initiating device circuit on a fire alarm control panel.
        (2.) Two Form−C auxiliary alarm relays for interface with rooftop unit or other equipment.
        (3.) One Form−C supervision (trouble) relay to control the operation of the Trouble LED on a remote test/reset station.
        (4.) Capable of direct connection to two individual detector modules.
        (5.) Can be wired to up to 14 other duct smoke detectors for multiple fan shutdown applications
22. Winter start kit
    a. Shall contain a bypass device around the low pressure switch.
    b. Shall be required when mechanical cooling is required down to 25°F (−4°C).
    c. Shall not be required to operate on an economizer when below an outdoor ambient of 40°F (4°C).
23. Time Guard
    a. Shall prevent compressor short cycling by providing a 5−minute delay (±2 minutes) before restarting a compressor after shutdown for any reason.
    b. One device shall be required per compressor.
24. Hinged Access Panels
    a. Shall provide easy access through integrated quarter turn latches.
    b. Shall be on major panels of − filter, control box, fan motor and compressor